Forecasting of Weather Effects for the Deep Space Network

Faramaz Davarian (davarian@jpl.nasa.gov), Ricardo Mendoza, and Boonsieng Benjauthrit
Jet Propulsion Laboratory, California Institute of Technology
4800 Oak Grove Drive, Pasadena, CA 91109

This paper presents a proposed approach for Ka-band link management for deep space applications using daily weather forecasts and discusses the tools that will be employed for operations. Performance metrics are also presented. The proposed approach will be tested in a two-year experiment campaign.

The Deep-Space Network

The primary purpose of a deep-space network is to provide communication and navigation services for deep-space exploration. Communication takes place between a deep-space asset (e.g., spacecraft, probe, etc.) and Earth. The uplink channel is used to transmit commands to the asset, and the downlink channel is used to transmit command verification, engineering data, and science data to Earth. The National Aeronautics and Space Administration (NASA) funds the Deep-Space Network which is managed by the Jet Propulsion Laboratory (JPL) of the California Institute of Technology (Caltech).

The Deep-Space Network (DSN) consists of three sites (complexes): Goldstone (U.S.), Madrid (Spain), and Canberra (Australia) [1]. These sites are spaced longitudinally about equally around the globe so that probes far from Earth are always in view of at least one complex. Each complex consists of a host of antennas with diameter sizes of 70 m, 34 m, and 26 m. Recently some of the 34-m beam waveguide (BWG) antennas have been upgraded to Ka-band capability. The combination of a particular antenna and its associated subsystems is referred to as a Deep-Space Station (DSS).

Communications between Earth and space are classified as one of two processes: the uplink process that generates and transmits commands to the spacecraft, and the downlink process also known as telemetry. The DSN is an integral part of both these communications processes. In the uplink process, commands are generated by the flight project (MRO in this case). Then, they are processed by the Advanced Multi-Mission Operation System (AMMOS) at JPL and relayed by the ground communication facility (GCF) to the DSN for transmission to the spacecraft. Similarly, telemetry (downlink) is received by DSN antennas, relayed over the GCF to AMMOS for processing and sent to the flight project. DSN operations and scheduling are handled by the Network Operations and Control Center (NOCC) at JPL. Figure 1 shows the end-to-end data flow between a deep-space probe and its flight project.

DSN will soon begin using Ka-band (32 GHz) as its primary downlink frequency. The susceptibility of Ka-band to the atmosphere calls for weather mitigation, particularly for efficient operations of the link [2].

DSN and Telecom Link Design

The prediction of the data rate and other capabilities that a deep space link can support is performed by a software algorithm named telecom predictor forecaster (TFP) at JPL [3]. TFP is an interactive tool that allows a telecom analyst, a mission designer, or any member

of the engineering team or sequence team to generate or verify predictions for the direct-to-Earth (DTE) and direct-from Earth (DFE) links between spacecraft and the DSN. The TFP plays two vital roles: first, it predicts link performance, second, it forecasts the data rate capability of a given link configuration. The link prediction function is often used by telecom analysts to validate the health and safety of the spacecraft. The data rate forecast function is often used by mission planners to estimate the data volume return.

To account for the atmospheric effects, TFP maintains long-term statistics of weather for the site of interest in the form of sky zenith noise temperature cumulative distribution tables. For a given pass, TFP converts zenith sky temperature to path sky temperature by a simple operation, i.e., division by the sin of the elevation angle. For weather forecasting, the cumulative distribution of zenith temperature is provided as an input to TFP by a service known as weather related service management (WRSM) [4]. Figure 2 provides a block diagram of the concept.

The national weather service provides site weather forecast every day of the year. The data are placed on a JPL sever automatically twice a day. Each forecast spans a period of five days. However, since forecast data degrades with time, it is desired to use the forecast as soon as possible.

WRSM uses the data provided by the weather service to develop sky noise temperature statistics (zenith) for the site of interest. This function will be performed twice a day shortly after the weather forecast is placed on the WRSM server. A new forecast will replace the old one by deleting the old forecast. Therefore TFP will only have access to the latest forecast. In reality, the old forecast is not deleted but is moved to an archive for analysis if need arises at a later date. Note that for modeling purposes, WRSM also receives site weather reports and archives them.

TFP will query the latest forecasted noise temperature statistics from WRSM server. It will use these data to predict a rate profile for the pass of interest. Figure 3 shows an example rate profile predicted by TFP for the Cassini project. In doing so, TFP utilizes information such as the receiver noise temperature, path elevation profile, and deep space craft characteristics. A deep space link can support higher data rates at higher elevation angles than lower elevation angles, the reason being that atmospheric loss is reduced at higher elevation angles.

The output of the TFP is a set of link predicts that will be provided to mission planning. After reviewing the results, mission planning will develop pass parameter values to be sent to deep space craft. This is done by generating a command for sequencing to the craft via the uplink.

Operational Demonstration

The above approach of using forecasting to efficiently manage deep space Ka-band links will be operationally tested in an experiment using NASA's Mars Reconnaissance Orbiter (MRO) for a two-year period starting in late 2006. MRO is equipped with a 35-Watt Ka-band amplifier and a 3-metter antenna enabling the

craft to communicate with Earth from Mars orbit at data rates up to 6 Msps [4]. Two 8-hour passes per week will be used for this experiment. The objectives of the experiment are summarized bellow:

1. Demonstrate that Ka-band links can be managed in an operation scenario reliably with low cost and low complexity
2. Validate the two options of long-term seasonal statistics and weather forecasting and compare their performance
3. Return science data for MRO and provide Ka-band link management expertise to future NASA missions

The experiment will provide the following performance measures: 1) Returned data volume 2) Link availability and continuity, 3) Data return latency

Conclusion

Weather forecasting is a novel approach to atmospheric effects mitigation that offers much promise. Being new, this approach requires data and statistics to evolve over time. A key function of WRSM is to collect and archive weather data. The following is a partial list of data that will be routinely archived by WRSM to be used for analysis and performance evaluation:

1. In situ weather measurements
2. In situ radiometric measurements of sky noise temperature
3. National Weather Service daily forecasts
4. Zenith sky noise temperature cumulative distribution tables obtained from daily forecasts
5. Path elevation angle when tracking deep space craft
6. Receiver noise temperature when tracking deep space craft
7. Frame and/or bit error rate when tracking deep space craft

The archived data will be used by the analyst to enhance the performance of the forecasting approach

References

[1] *http://deepspace.jpl.nasa.gov/dsndocs/810-005/ 301*

[2] F. Davarian, S. Shambayati, and S. Slobin, "Deep Space *Ka*-Band Link Management and Mars Reconnaissance Orbiter: Long-Term Weather Statistics Versus Forecasting," *IEEE Proc.*, Vol. 92, No. 12, Dec. 2004, pp 1879-1894

[3] R. Tung and K. Tong, "A Multi-Mission Deep Space Telecommunications Analysis Tool: The Telecom Forecaster Predictor," IEEE Aerospace 2000, Big Sky, MT, March 18-25, 2000

[4] R. Sniffin, *Weather-Related Service Management Operational Concept Document, System Capability Operations Concept*, JPL D-28533.

[5] M. D. Johnston, et. al., "Overview of Mars Reconnaissance Orbiter Mission," 2003 IEEE Aerospace Conference, Big Sky, MT, March 8-15, 2003.

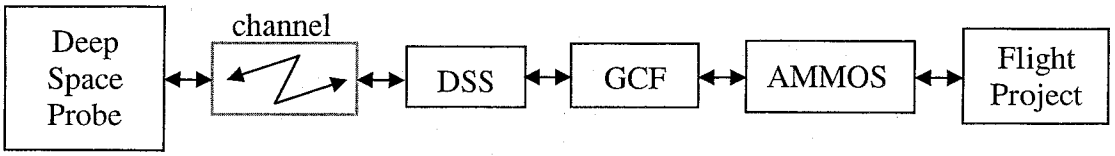

Figure 1. End-to-end flow of command and telemetry between deep-space probes and flight projects.
DSS: Deep-Space Station
GCF: Ground Communications Facility
AMMOS: Advanced Multi-Mission Operation System

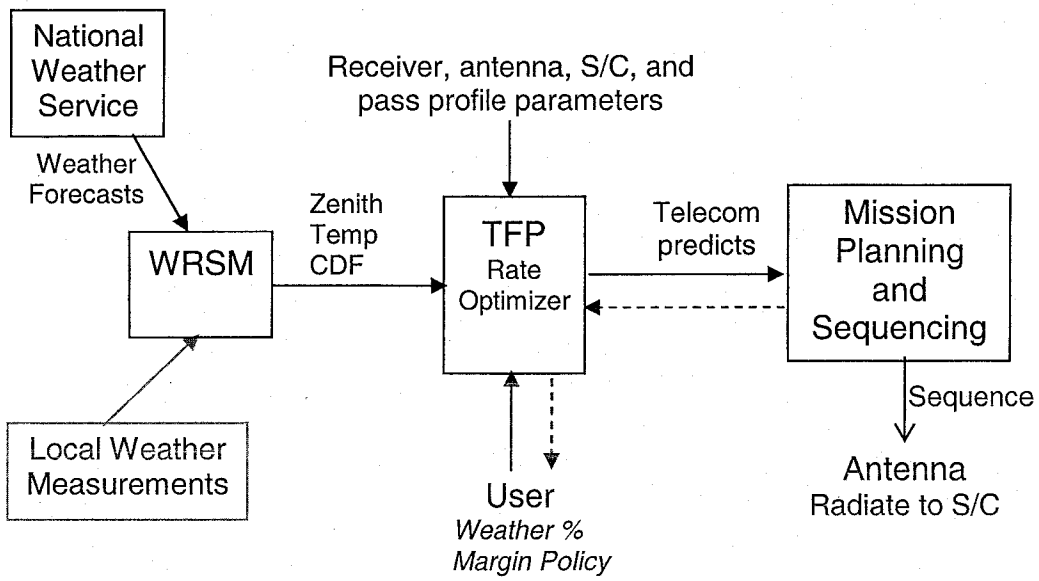

Figure 2. Deep Space Link Design with Weather Forecasting

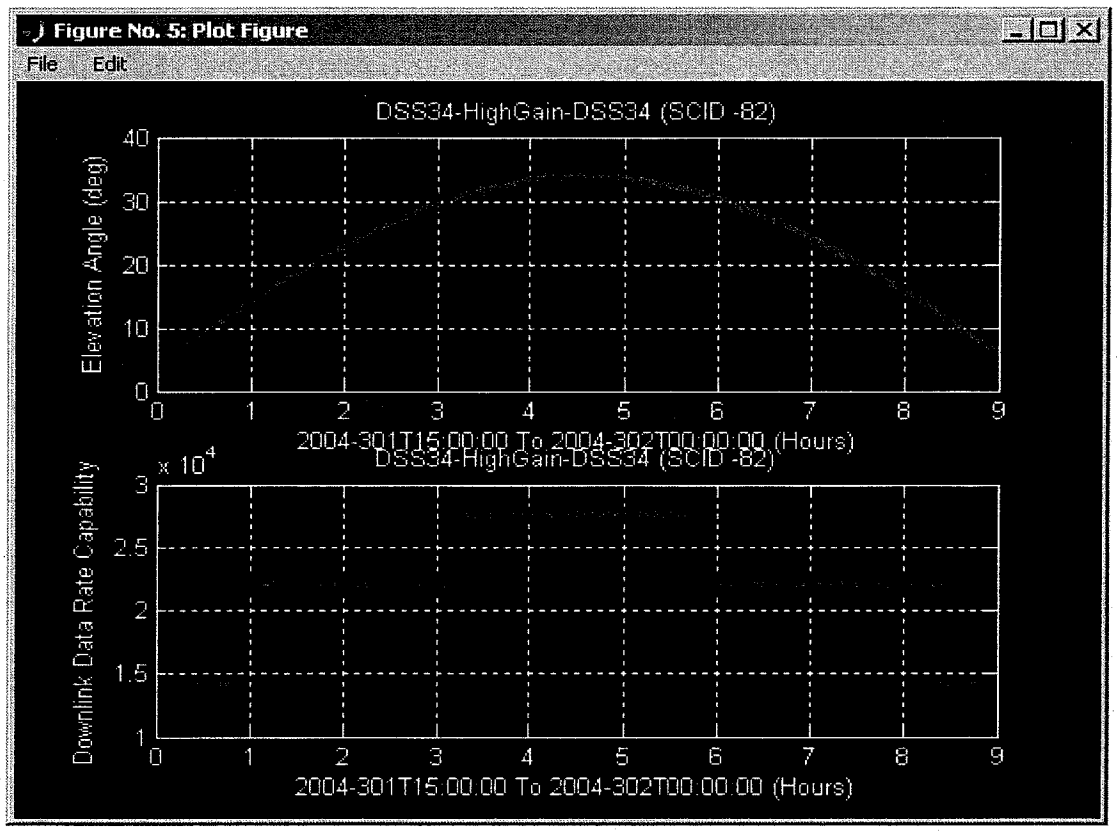

Figure 3. A Cassini Sample Data Rate Profile
Top Graph: Path elevation (degrees) as a function of time (hours)
Lower Graph: Downlink Data Rate (bps) as a function of time (hours)