The Cassini Spacecraft Design and Operations

Julie L. Webster

Jet Propulsion Laboratory, 4800 Oak Grove Drive, MS 230-104, Pasadena, CA 91101

Abstract. Designed and funded in the pre-"better, faster, cheaper" era, Cassini was built to be the one mission to Saturn for many years to come. Its complement of twelve Orbiter science instruments and the Huygens Probe make Cassini one of the most complex missions ever flown. With a seven-year cruise and Saturn Orbit Insertion now over, Cassini is settling in to perform a very ambitious prime mission over the next four years. This paper provides an overview of the spacecraft design and the mission operations to date.

INTRODUCTION

The Cassini Saturn orbiter and the Huygens Titan atmosphere probe were created by the world's scientific community to examine the Saturnian system in unprecedented detail. The science investigations were intended to build upon and expand the information sent back by the Pioneer 11 and two Voyager flybys in 1979, 1980 and 1981. The Cassini spacecraft was designed, built and tested over a period of 5 years, from 1992 – 1997. It enjoyed a spectacular launch on 15 October 1997, and has followed its free-fall, gravity-assist trajectory for nearly seven years, culminating in the successful Saturn Orbit Insertion maneuver on July 1, 2004. Since that time, Cassini has been performing its prime mission objectives, including the delivery of the Huygens probe to Titan on January 14, 2005.

SPACECRAFT DESIGN

The Cassini orbiter is the largest and most sophisticated outer planet spacecraft built to date. At launch, the orbiter with the Huygens probe weighed 5574 kg. Over half of the mass was the liquid propellants needed to perform the main engine maneuvers. The spacecraft today is a svelte 2780 kg, having used up the bulk of its propellants and having ejected the 320 kg Huygens Probe.

The Cassini design accommodated a wide range of solar output, from the heat of the Sun at Venus to the cold of Saturn. It is electromagnetically quiet, and able to communicate with the Earth at a distance of 1.6 billion km.

Cassini is a three-axis stabilized spacecraft using either Reaction Wheels or small thrusters for control. Unlike Galileo, the Mission to Jupiter, Cassini has no articulating platform that would allow the imaging instruments to independently target objects of interest. The entire spacecraft must be turned as one for instrument pointing. As a result, the design and sequencing of science opportunities is more complex. Earth communications must be carefully balanced with data collection in order to maximize science return.

All of the main engineering subsystem modules have redundant units to be used in the event of failure of the main unit. This is also typical JPL design when a single spacecraft is planned for a major mission like Cassini.

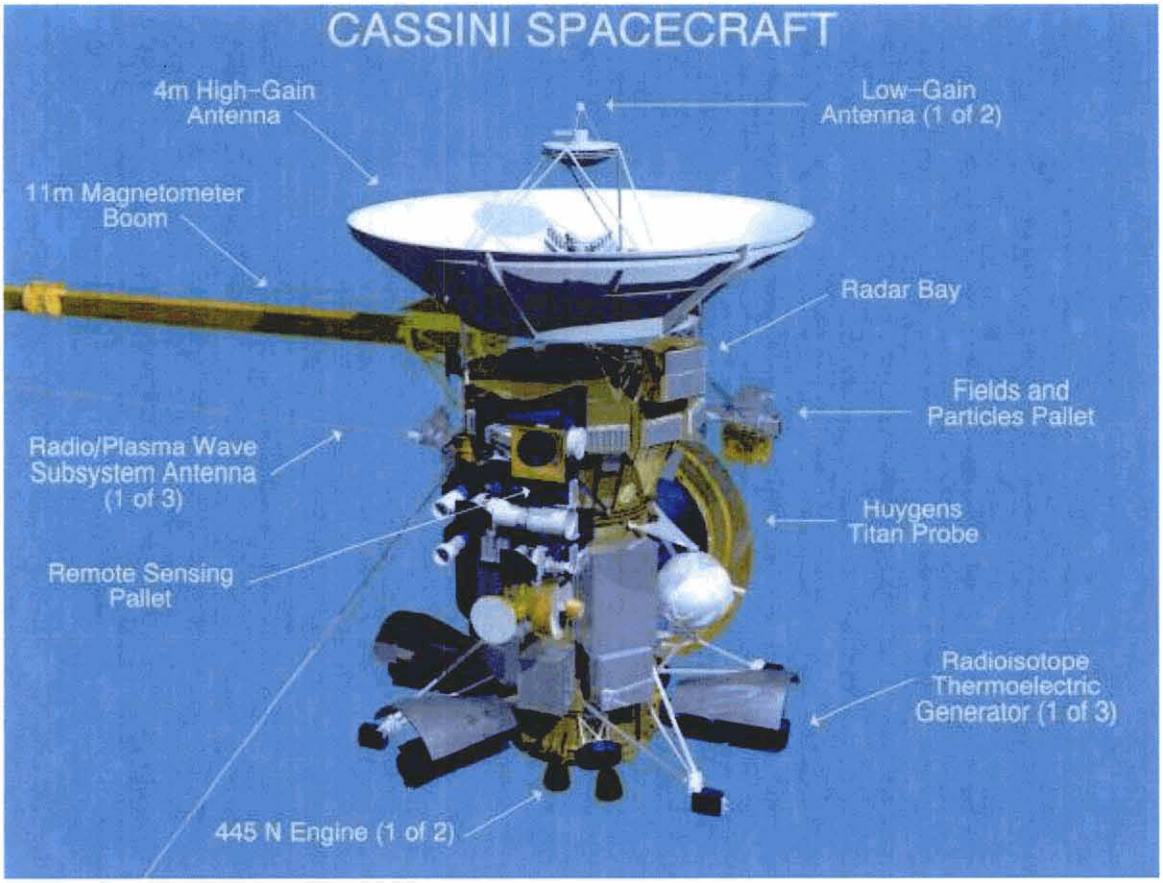

FIGURE 1. An overview of the Cassini spacecraft. The Z-axis, or roll axis is through the HGA and the main engines. The Y-axis is along the Magnetometer Boom and the X-axis is through the Huygens Probe.

Spacecraft Structure

Cassini uses the classic Jet Propulsion Laboratory multi-sided ring bus derived from the early Mariner spacecraft. The Cassini bus has twelve sides, or bays, that hold most of the engineering subsystems and some of the instrument electronics.

There are five main modules "stacked" to complete the spacecraft. At the top is the four meter parabolic High Gain Antenna (HGA), built by the Italian Space Agency. It is attached to the twelve bay electronics module, which in turn, is attached to the Upper Equipment Module. These three components were then stacked on top of the domed Propulsion module, built by Lockheed Martin Astronautics Company. The lower equipment module, holding the small thruster cluster pods completes the spacecraft structure. The spacecraft is roughly the size of a school bus, at 6.8 meters tall. With the magnetometer fully extended it is over 15 meters wide. The bulk of the spacecraft is made of aluminum, with some titanium and beryllium pieces for additional structural integrity. The HGA and the legs of the lower equipment module are a graphite epoxy structure.

Power

Power for the Cassini spacecraft is supplied by three Radioisotope Thermoelectric Generators (RTGs). The RTG power at launch was about 875 watts, with the end of mission power predicted at 692 watts in July of 2008. The rate of power decay has been quite predictable, allowing for routine power operational modes to be used in sequencing.

The RTG power is supplied to 192 Solid State Power Switches (SSPS), which act the same as circuit breakers. Each individual engineering or science load has been allocated one or more SSPSs depending on the load required, or the criticality of the unit. For example, the Probe uses five SSPS to carry its 260 watts, and the main engineering computers have two redundant SSPS, each capable of supplying the entire 10 watts.

Command and Data Subsystem

Cassini has redundant IBM 1750A computers, called Engineering Flight Computers (EFC) that provide command, data handling, telemetry and timekeeping services. As commands are received from the telecommunication subsystem they are processed and routed to the appropriate instrument or engineering subsystem. This routing takes place over a MIL-STD-1553B Bus. Each instrument or engineering subsystem has a Bus Interface Unit (BIU) to receive commands from the computer and to send telemetry packets when requested. There are two redundant 1553B buses, but only one is active at any time. The second bus is for reliability and redundancy. The 1553B bus is a mostly serial master bus, commanding and collecting data from only one instrument or engineering subsystem at a time. The exception is broadcast messages, which are transmitted to all BIUs at the same time. Each EFC has a 7.4 Megahertz quartz crystal clock for timekeeping services. The EFC flight code is written in ADA, and the load image has some 45,000 lines of code for each EFC. The flight code is stored in radiation hardened Static Random Access Memory (SRAM).

FIGURE 2. The IBM Radiation Hardened 256K SRAM, part of the flight computers.

Solid State Recorders

Two Solid State Recorders (SSRs) handles data storage. Each recorder has approximately 2.2 Gigabytes of data storage. The SSRs have two functions, the main one is to store the science and engineering telemetry until it can be downlinked to Earth. The second function is to store copies of the flight software for Attitude and Articulation Control Subsystem (AACS), CDS and the instruments. Each SSR can hold two different flight software loads for each instrument and the engineering computers. This allows an instrument or the CDS or AACS to uplink and check out a new flight software load, while still maintaining an older copy to fall back on, if needed.

Attitude and Articulation Control Subsystem

The basic system architecture for the AACS flight computer is the same as the CDS. AACS also has redundant IBM 1750A computers, called AACS Flight Computers (AFC) and redundant MIL-STD-1553B Bus'. The AFC receives commands from and sends telemetry to the CDS EFC through a special BIU on the CDS Bus. It uses its own internal AACS 1553B bus to "talk " to the Sun Sensors, Stellar Reference Units, Inertial Reference Units, Accelerometer and the Propulsion Drive electronics. The AFCs have their own flight software and fault protection routines to always maintain proper attitude knowledge and control. The code is also in ADA, but larger than the EFC, with some 55,000 lines of code.

Attitude Determination

The prime sensor for attitude knowledge is the Stellar Reference Unit (SRU). The SRU has a 3700 Star Catalog that identifies up to five of the brightest stars in the field of view at any given time. The SRU is located 90 degrees away from the Optical Remote Sensing Platform, on the +X spacecraft orientation. The SRU information is then fed every 5 seconds to the Inertial Reference Unit (IRU), which propagates the inertial attitude between star updates. Should the SRU star updates be suspended, either by the ground or by some fault on the spacecraft, the IRU can propagate the inertial attitude for many hours before needing a star update from the SRU. The backup, "failsafe" unit is the Sun sensor. The two Sun sensors are located in cutout holes in the HGA. The sun sensor is used for initial Sun acquisition and in certain fault protection situations. Should attitude knowledge be lost for any reason, the spacecraft will try to find the Sun and center on it, then try and reestablish attitude knowledge.

Attitude Control

There are two modes of operation for attitude control. One is using the reaction control subsystem (RCS), which uses small 1 Newton thrusters to control an attitude within a "deadband". The attitude in each axis is allowed to drift to the edge of the deadband, then a thruster fires to return to the center of the deadband. A typical deadband range is +/- 2 milliradians. This is fairly coarse control of the spacecraft, good for downlink and for large directional instrument control, but not the best for good images. For finer control, the spacecraft uses three Reaction Wheel Assemblies (RWA). Each RWA is aligned to be roughly 90 degrees apart. The RWAs are not co-aligned with the spacecraft X, Y and Z-axes, but rather between any two axes. The RWAs are capable of maintaining a spacecraft attitude to within 40 microradians at any given time.

Propulsive Maneuvers / Trajectory Correction Maneuvers

The AACS uses the 455 Newton Main Engines for all maneuvers over 0.5 meters/sec change in velocity. The bipropellant system is described below in the Propulsion section. The largest maneuver needed by Cassini was the Saturn Orbit Insertion Maneuver. At 626 meters/second, it used about 27% of the total 3132 Kg of bipropellant loaded at launch. The Main Engine gimbals control only pitch and yaw direction during an actual burn. The RCS thrusters do roll control. For very small maneuvers, only the RCS thrusters are used.

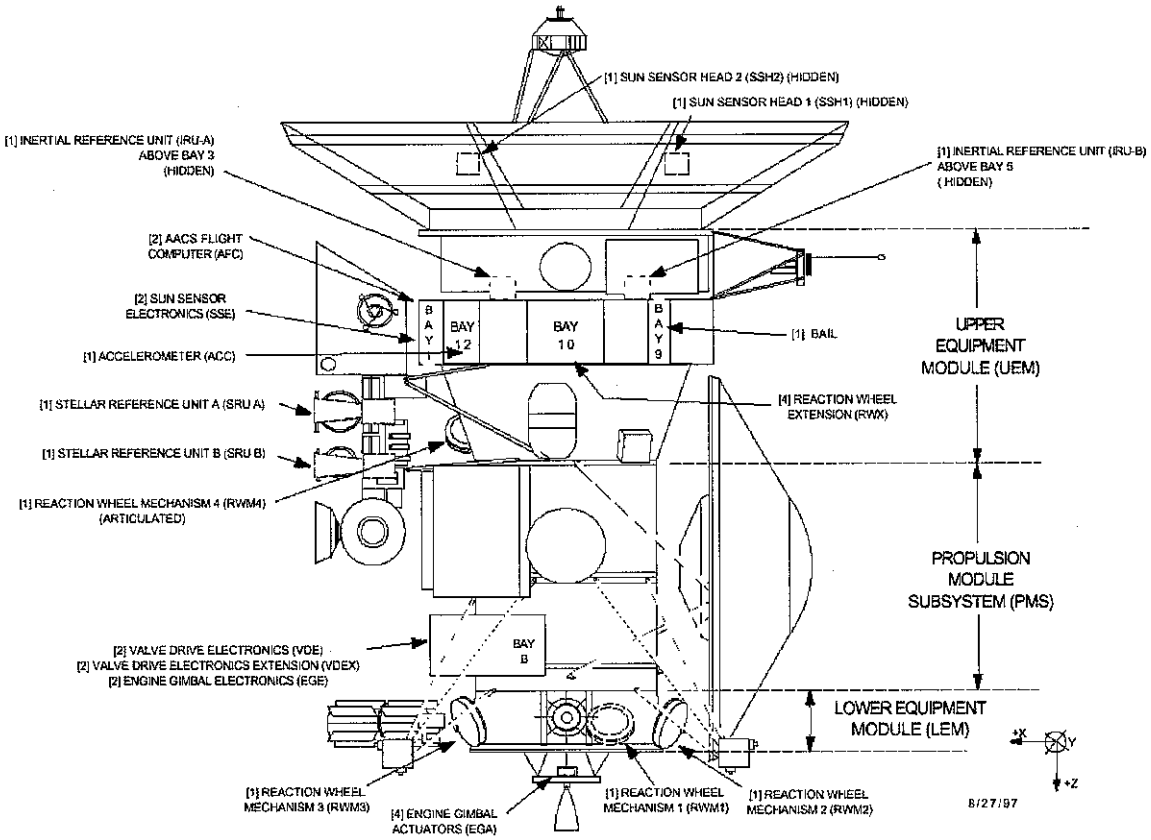

FIGURE 3. The AACS view of the spacecraft.

Propulsion Subsystem

The Propulsion subsystem has two independent systems, the bipropellant and the monopropellant subsystems. The bipropellant system is used strictly for large maneuvers, as described above.

Bipropellant Subsystem

The bipropellant subsystem consists of the bipropellant tanks and plumbing to the 455 Newton Rocket Engine Assemblies, also known as the Main Engines. The bipropellant design uses monomethylhydrazine (MMH) as the fuel and nitrogen tetroxide (NTO) as the oxidizer. The separate propellant tanks are pressurized by a common Helium system. The actual plumbing was designed after the Mars Observer loss, and uses an extensive pyrotechnic valve ladder configuration to isolate the NTO from the MMH side. The high pressure Helium can also be isolated from both fuel and oxidizer tanks using additional pyro activated valves. The pyro ladder has been used multiple times in flight to pressurize and isolate the NTO tank.

Monopropellant Subsystem

The monopropellant system is a hydrazine 1 Newton thruster design. There are four thruster clusters on the lower equipment module, each containing two Z –axis facing and two X-axis facing thrusters, for a total of 16 thrusters.

Only one thruster in each axis on each cluster is used, the other two are redundant. The thrusters fire in pairs, with the Z facing thruster used for pitch and yaw control, and the Y facing thrusters for roll control.

Telecommunications Subsystem

Communications with the Cassini spacecraft is done via an X-Band uplink and X-Band downlink from and to the Deep Space Network (DSN). The DSN has three main complexes – one near Madrid, Spain, one near Canberra, Australia, and one near Barstow, California. As the Earth rotates, at least one of the complexes can "see" Cassini at any given time. The DSN uses either 34 meter or 70-meter antennas for communication with interplanetary spacecraft. On a typical day, Cassini is allocated a 9-hour DSN pass.

Antennas

Cassini has three communication antennas. The 4-meter HGA is used for high rate telemetry and commanding. The Low Gain Antenna-1 (LGA) sits on top of the HGA and is used for emergency links. A second LGA-2, located below the Huygens Probe was used extensively for Inner Cruise communication when the HGA was used as a Sunshade.

Uplink/Downlink

Commands are routed from JPL to the DSN and uplinked to Cassini via the X-Band carrier. The uplink power from the DSN is usually 18 kW. The command uplink rate is from 7.8125 bits per second (bps) over the LGA to 500 bps over the HGA.

A 20kW X-Band amplifier powers the downlink carrier. The downlink telemetry rate is 5 bps over the LGA. Over the HGA, the bit rate is variable, from 1896 bps to 165 kbps. The highest telemetry rates are available only over the DSN's 70-meter stations.

Navigation

The downlink carrier is normally made coherent with, or an exact multiple of, the uplink carrier to get a two-way Doppler signal. The two-way Doppler signal is used for precise navigation. The DSN can also add ranging or other "tones" on the uplink to obtain radiometric tracking data for Navigation.

Thermal Control Subsystem

The Thermal Control subsystem is distributed all around the spacecraft, using both active and passive components. The spacecraft is covered with thermal multi-layer insulation blankets. The blankets are either gold, from a gold-colored Kapton layer, or black from a black Kapton layer.

Each instrument has its own replacement heater that is normally used when the instrument is turned off. Some of the more isolated instruments have supplemental heaters all designed to keep the electronics within certain temperature limits. The electronics in the 12 bay structure, the upper equipment module and the Propellant control assembly also have supplemental heaters as needed.

The larger heat generators, such as CDS, the Ku-Band RADAR, Radio Frequency Instrument S-Band, Ka-Band and X-Band amplifiers, all have thermostat controlled louvers on the outside to actively cool the electronics.

On-Board Fault Protection

Due to the complex nature of spacecraft events, and the long time lag between downlink passes with ground in the loop, the computers also have special sequences that function as system fault protection routines. Each subsystem has some hardware fault protection built in, but the system level fault protection is in the flight software loaded into

the CDS EFCs. At present, there are 15 system level routines that can execute a response to any of several monitors if needed. The core system fault protection routine is known as Spacecraft Safing. Safing refers, literally, to keeping the spacecraft safe for a period of time until the ground can intervene. The main purpose of these routines is to establish a safe power level, attitude reference and attitude control, and a robust telecommunication link to Earth.

Orbiter Instruments

The twelve Orbiter instruments are grouped into three main components – the Optical Remote Sensing (ORS) instruments, the Microwave and Plasma Sensing (MAPS) and the Radio Frequency (RF) components.

ORS

There are four ORS instruments, the Imaging Science Subsystem (ISS), the Composite Infrared Spectrometer Subsystem (CIRS), the Ultraviolet Imaging Subsystem (UVIS), and the Visual and Infrared Mapping Spectrometer Subsystem (VIMS). The cameras are located on the ORS Pallet, on the –Y spacecraft axis. The four instruments are co-aligned and usually image the same target.

MAPS

There are six MAPS instruments, the Radio and Plasma Wave Subsystem (RPWS), the Magnetometer or MAG, Cosmic Dust Analyzer (CDA), the Magnetospheres Imaging Instrument Subsystem (MIMI), the Ion and Neutral Mass Spectrometer Subsystem (INMS) and the Cassini Plasma Spectrometer Subsystem (CAPS). The MAPS instruments are located either on the Fields and Particles Pallet or on the Upper Equipment Module.

RF

There are two Radio Frequency instruments, the Ku-Band RADAR Subsystem and the Radio Frequency S-Band and Ka-Band Instrument Subsystem (RFIS). Both use the HGA as part of their instrument. The RFIS also uses the Telecommunications X-Band frequency. All three frequencies, S-, X-, and Ka-Band, can be made coherent with the DSN X-Band uplink.

SPACECRAFT OPERATIONS

Although Cassini has had relatively few problems in its seven years mission to date, its sheer size and the number of instruments make Operations more complex than most of the other JPL flying missions. It was recognized early on that processes, procedures and ground software tools would have to be developed in order to maximize the science return for the mission. Even with this early recognition, it has taken most of the last seven years to fully develop the capabilities necessary to perform the tour operations.

Launch and Early Cruise

Following the successful Titan-4B launch, the Spacecraft Operations team spent the early cruise time calibrating the engineering subsystems. The first trajectory course correction using the Main Engine was performed less than 2 weeks after launch. Because the HGA was used as a Sun shield during inner cruise, communications were restricted to 948 or 40 bits per second downlink over LGA-1 or LGA-2. The science instrument teams performed simple checkouts during most of 1998. The first Venus flyby occurred on April 26, 1998. In December of 1998, the first major pressurized maneuver was performed. The Deep Space maneuver was a 90 minute burn that slowed the spacecraft down for the second and final Venus flyby on June 26, 1999. Earth Swing-By quickly followed the Venus-2 flyby on August 18, 1999. After Earth Swing-by, the major cruise activities started.

Science Checkouts

The spacecraft was far enough away from the Sun to go to permanent HGA to Earth orientation on the first of February 2000. This was an important step, because now, the real science data rates could be used, as well as the RADAR and RFIS instruments, which used the HGA. The Huygens operations team also checked out the Probe mission receivers using the DSN as a Probe S-Band Relay uplink.

In April of 2000, the first of two AACS deferred flight software loads was uplinked and checked out by the Spacecraft Operations team. This flight software load provided the RWA control. The first CDS deferred flight software, which added dual SSR configuration control, was uplinked and checked out in August of 2000. The cruise phase was beginning to take on a real science mission look.

Jupiter Encounter

With new flight software capabilities on board, the Science teams began an intensive six-month Jupiter campaign. This was the first extensive science data taken and was invaluable for demonstrating and validating the tour sequence capabilities. Unfortunately, it was also the first inkling that future problems were in store for the RWAs.

Conjunctions and Gravity Waves

Following the intense Jupiter campaign, 2001 and 2002 were again relatively quiet. Starting in June of 2001, the third spacecraft conjunction period demonstrated good RFIS Ka-Band pointing stability. Long Ka-Band Gravity Wave experiments was performed during December, 2001 and December, 2002. During 2002, the fourth conjunction period had promising results for both Navigation and the Radio Science teams using the Ka-Band system. Problems with the RWAs and the Ka-Band Translator, described in the In-flight Anomalies section curtailed many of the science opportunities in 2003.

Approach Science to Tour

By January 2004, the ground tools and operations team were really ready to build and perform tour-like science sequences. During the past year, numerous scientific discoveries have already been made and published. The full operational capabilities have been utilized with great science results already published.

In-flight Anomalies

The Cassini spacecraft, as a whole, has performed significantly above expectations, but it is not without its share of minor annoyances and major concerns. The significant anomalies, causing both operational and software workarounds, are listed below.

SSR Bit Errors

As soon as Cassini left the launch pad, the CDS engineers were noting higher than expected single bit errors (SBE) and significantly higher than expected double bit errors (DBE). Because the DRAMs making up the SSR were commercial parts, some SBEs were expected, and the SSR had a hardware function to scrub the memory every 530 seconds. However, the DBE rate could not be explained. An anomaly investigation team found that the logical to physical requirement of the individual bits was not correctly followed, and, as a result, one galactic cosmic ray could cause two bit errors. Flight software was created to trend the SBEs and DBEs and to initiate an automatic repair of the flight software copies, if required.

Regulator Leak

The first TCM was performed on November 9, 1997. On November 7, the first normally closed pyro valve was fired to open the Helium system to the bipropellant system. In a matter of hours, a large regulator leak was noted, as the bipropellant tanks continued to fill past the expected regulator seat state. The high pressure helium latch valve was quickly closed to isolate the helium system from the bipropellant tanks. Because the latch valve closure was a deviation from expected operations and an extensive investigation team was formed. Numerous months were spent trying to determine the right course to take. Bringing the redundant regulator was considered numerous times. In the end, although the regulator leaks, it does its job of regulation quite well, and we have continued to use it and the high-pressure helium latch valve to manage the helium flow.

Solid State Power Switch Trips

In February of 1998, a spare SSPS switch suddenly showed a "tripped" monitor status. Over the next two years, three more switches showed trips. The anomaly investigation team found that the clear/trip monitor had a flip-flop circuit vulnerable to single event upsets caused by galactic cosmic rays. Based on special tests run, the radiation team predicted a 'trip" to occur at the rate of two times per year. There have been a total of 11 switch trips to date. Again, special CDS flight software was created to note the trips and reacted accordingly.

Reaction Wheel Anomalies

Cassini started using Reaction Wheels for pointing stability following the AACS flight software uplink in February 2000. By the start of the Jupiter campaign in the fall of 2000, all of the three prime wheels had experienced occasional increased drag torque spikes. The spikes would cause the wheel to use more power to overcome the increased friction. About 10 days before Jupiter closest approach, RWA-2 hit a software limit on the amount of power it could draw to overcome its increased drag torque. This triggered a fault protection sequence that powered off all three prime wheels and transitioned the spacecraft to RCS attitude control. The spacecraft continued the science sequence, but using RCS instead of RWA caused about 0.7 Kg of Hydrazine to be used up. When the spacecraft returned to Earth point, a command was uplinked to terminate the sequence. Several days were spent troubleshooting the wheels before the science sequence was continued. The investigation team created a new ground software tool to help manage the wheel speeds and avoid the circumstances that caused the autonomous fault protection.

RWA-3 was the next major wheel anomaly. It continued to show increased drag torque spikes, and exhibited a new variation termed "cage instability". The Spacecraft Operations team recommended that RWA-3 be replaced with the spare RWA-4 to save the remaining life in RWA-3. This was accomplished during July 2003.

Huygens Probe Receiver Error

In 2000, the Huygens team performed a series of end-to-end link tests using the DSN to simulate a Probe relay signal back to the orbiter. These were the first tests that truly simulated the real mission Doppler signal. The Huygens team discovered, as a result of the testing, that a design error caused the Probe orbiter receiver to not properly track the full Doppler shift at the bit level. The joint ESA-NASA anomaly team concluded that the Huygens mission had to be redesigned to null out the high Doppler rate. The Saturn tour was redesigned to add an additional Titan pass for the Huygens mission that was at 60,000 km altitude versus the original 1300 km altitude.

Ka-Band Translator Frequency Change

The Radio Science instrument included a Ka-Band Translator (KaT) that would receive a Ka-Band uplink from the DSN and send a coherent Ka-Band downlink. This two-way coherent Ka-Band was used for two Gravity Wave experiments and two Conjunction periods. In 2002, the KaT began drifting from its expected rest frequency. At first, power cycling was used to force the KaT back to expected rest frequency. In the past year, even power cycling hasn't worked and the KaT has drifted out of usable range. The impact on the Radio Science team will be degraded science if they have to fall back on X-Band up and coherent Ka-Band down.

SUMMARY

The Cassini mission to date has been a tremendous success. The spacecraft itself has been described as a true "Cadillac" of interplanetary missions. The long cruise allowed the operations team to fully understand and react to anomalies, both major and minor. The operations teams have a combined experience level probably unparalleled at JPL or any other interplanetary mission center. We anticipate the next four years to be nothing short of spectacular in terms of new science discoveries of Saturn.

For current information on the mission, visit the Cassini-Huygens websites at http://saturn.jpl.nasa.gov, http://www.nasa.gov/cassinim and http://huygens.esa.int/huygens.

ACKNOWLEDGEMENTS

The Cassini/Huygens mission is a joint undertaking by the National Aeronautics and Space Adminstration, the European Space Agency, and the Agenzia Spaziale Italiana. This work was carried out for the Cassini-Huygens Program at the Jet Propulsion Laboratory, California Institute of Technology under contract from National Aeronautics and Space Administration.