# THE CASSINI-HUYGENS MISSION TO SATURN AND TITAN

Earl H. Maize

*Jet Propulsion Laboratory, 4800 Oak Grove Drive, Pasadena, CA, 91011, USA*

**Abstract.** The Cassini-Huygens mission is an international collaboration whose goal is an intense and detailed study of Saturn and its system. This paper provides a brief overview of the mission.

## THE ORBITAL TOUR – DAY ONE

On June 30, 2004, the giant seventy-meter antennas at NASA's Goldstone and Canberra tracking stations strained to follow a four billionth of a trillionth of a watt radio signal. The source of this signal, just barely above the threshold of the receivers, was the Cassini spacecraft executing the Saturn orbit insertion maneuver 1.5 billion kilometers away. The spacecraft had crossed between Saturn's F and G rings and was now firing its main engine in a precisely timed, 96 minute burn designed to slow the spacecraft enough to allow the massive gravitational field of Saturn to capture it into orbit. The flight team at the Jet Propulsion Laboratory intently monitored the signal to assess the performance and progress of the burn while the tenuous radio signal flickered in and out as it was intermittently blocked by Saturn's rings. The leveling off of the Doppler shifted signal indicated that the spacecraft had terminated the burn exactly when the desired orbital energy had been achieved and was greeted with cheers from the mission control center. A few hours later, after the spacecraft had disappeared and reappeared from behind Saturn, the first spectacular close-up images of Saturn's rings from the close approach were returned to eagerly waiting science teams. After 6.7 years of interplanetary cruise, and more than 20 years after the proposal of its original concept, the Cassini-Huygens orbital tour of Saturn had finally begun.

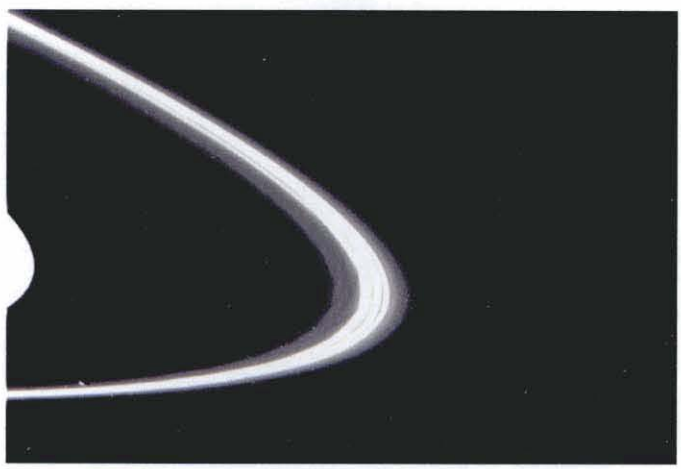

FIGURE 1. One of the first close up images of Saturn's rings showing the F-ring (NASA/JPL)

The Cassini-Huygens Mission to Saturn and Titan is a cooperative international effort of the National Aeronautics and Space Administration (NASA), the European Space Agency (ESA), and the Agenzia Spaziale Italiana (ASI). The mission consists of two spacecraft, the Cassini orbiter supplied by NASA and the Huygens Titan probe supplied by ESA. The mission's ambitious four-year goal at Saturn is to thoroughly explore the vast Saturnian system: the planet itself, its majestic rings, its eclectic assortment of moons, and its extensive magnetic field and environs.

## SATURN AND TITAN

Saturn is one of the most fascinating planets in the solar system. With its extensive ring system, large retinue of satellites, and extensive magnetic field, it has been likened to a miniature solar system. It has intrigued and mystified astronomers since Galileo first turned a telescope on it in 1610. Cassini-Huygens will continue the nearly 400-year tradition of studying Saturn and expects to rewrite the textbooks on this amazing system. The final results will be deeper insights into the structure and formation of our solar system.

Saturn's swirling atmosphere will be intensely studied by the Cassini orbiter. At the equator, Saturn has jet streams with wind speeds in excess of 500 meters per second and storms that appear and disappear on time scales from days to months. The study of the atmospheric processes on Saturn could yield further understanding on global weather here on Earth. A gas giant with a bulk density of less than one, Saturn's atmosphere is composed primarily of hydrogen with a small percentage of helium and traces of other gases such as ammonia and methane.

The ring system of Saturn is the most visually compelling part of the system. At a large scale, there are seven rings (Cassini has since found an eighth) lettered A through G, but they are actually composed of thousands of ringlets. The rings are composed primarily of ice and dust particles that range in size from microscopic to about 100 meters. There are a number of unanswered questions about the rings that Cassini hopes to answer: how did they form, what are they made of, are they stable, what causes the radial variations in their structure, and what is their relationship to the icy satellites?

Saturn's magnetosphere - the magnetic field that surrounds the planet - will be intently scrutinized. Scientists wish to understand the magnetic field structure, study the formation and properties of neutral and charged particles, and analyze the radio waves generated by interactions of the magnetosphere with the solar wind.

As Cassini-Huygens approached Saturn, the planet was known to have 31 satellites. (At the time of this writing, at least two more satellites have been sighted). There is one very large moon, Titan, a number of smaller moons, called icy satellites, and many even smaller objects colloquially known as rocks. The study of these objects will be a major objective of the orbiter instruments. Notable among the icy satellites are snow-white Enceladus that appears to be covered with ice, and Iapetus that has one bright hemisphere and one hemisphere that is black as coal. Cassini will study five of the icy satellites with close flybys and numerous others with more distant encounters.

A major objective of the Cassini-Huygens mission is the moon Titan. Named after the giants that preceded the Olympian gods in the Greek pantheon, Titan is the largest moon of Saturn and the second largest in the solar system (after Ganymede of Jupiter). It was discovered by Christiaan Huygens in 1655. It easily out sizes Earth's moon and the planet Mercury. While its girth alone would qualify it as an object worthy of detailed study, even more intriguing than its physical dimensions is the fact that Titan is the only moon in the solar system with an extensive atmosphere. Its atmosphere is predominantly nitrogen and roughly 1.5 times denser than the Earth's at the surface and ten times as thick. The remainder of the atmosphere is composed of methane, other hydrocarbons, and some trace gases, predominantly argon. Scientists have hypothesized that Titan's atmosphere may resemble that of Earth several billion years ago. With a surface temperature of -180 degrees centigrade, some speculate that Titan may be an early Earth in deep-freeze. Earth based observations imply that there may large bodies of liquid ethane on the surface.

NASA's Voyager spacecraft provided the first detailed images of Titan but showed the moon obscured by an opaque, yellow-orange haze without any distinguishing features. Subsequent ground based observations have shown some variations in Titan's appearance. Cassini's orbiter instruments will be able to penetrate this haze, the RADAR will be able to map portions of the surface and the Huygens probe will provide detailed measurements of the atmosphere and surface of Titan.

## FROM CONCEPT TO CAPE CANAVERAL

Saturn has been visited three times prior to Cassini-Huygens - by NASA's Pioneer 11 (1979), Voyager 1 (1980), and Voyager 2 (1981) spacecraft. Each of these missions provided profound revelations about the Saturnian system but each was a flyby mission and could only provide a fleeting glimpse of the dynamic Saturnian system. After Voyager 2, it was clear that a second phase of detailed reconnaissance was in order.

In 1983, the Solar System Exploration Committee recommended to NASA that a Titan probe and radar mapper and a Saturn orbiter should be part of its basic program. And a year prior, the Space Science Committee of the European Science Foundation and the Space Science Board of the National Academy of Sciences had begun considering possible U.S. and European collaboration in planetary missions. The environment was perfect for the development of an international mission to Saturn.

For several more years, the two agencies and the science community worked to refine the concept of a joint mission to Saturn. In 1989 the Cassini-Huygens mission was approved and funded by both NASA and ESA. The mission was named in honor of two 17th-century astronomers who made important early observations of Saturn: Jean-Dominique Cassini (1625-1712) and Christiaan Huygens (1629-1695). Both agencies released an announcement of opportunity for participation in the scientific investigations of the mission and the selection process began. The Cassini spacecraft was to be developed at the Jet Propulsion Laboratory (JPL) in Pasadena, California while Huygens would be developed at ESA's European Space Technology Center (ESTEC) in Nordvijk, Nethertherlands. Final integration of the two spacecraft would be performed at the launch site in Cape Canaveral. During the next eight years, NASA and ESA selected the participating investigations and the instruments and engineering systems were designed and built, and integrated into their final assemblies.

The mission narrowly averted the budgetary axe twice, once in 1992 and again in 1995. The budget constraints in 1992 required a significant restructure of the mission to reduce costs. In its original design, the Cassini orbiter had two articulating platforms to accommodate the remote sensing instruments and fields and particles instruments. The spacecraft would be capable of imaging a remote target, performing fields and particles measurements and relaying the collected data to Earth simultaneously. The restructured design removed the articulating platforms and fixed all the instruments directly to the spacecraft structure. This new design satisfied the budgetary constraints of the time but would have a deep impact on the mission planning effort (see below).

With the final pre-launch budget hurdles behind it, Cassini-Huygens began spacecraft assembly and integration in 1996 and on October 17, 1997, fifteen years after the original proposal, the Cassini-Huygens spacecraft were successfully launched from Cape Canaveral on board a Titan IVB/Centaur, the United States' most powerful expendable launch vehicle. In all, seventeen nations had contributed to building the spacecraft and more than 250 scientists worldwide would study the data collected.

## THE SPACECRAFT AND THEIR INSTRUMENTS

Cassini-Huygens are two spacecraft in one, the Cassini orbiter and the Huygens probe. The Huygens probe is attached to the side of the Cassini orbiter (See Fig. 2) and will be released from the orbiter to enter the atmosphere of Saturn's largest moon Titan, and descend via parachute onto its surface. Arguably the most complex interplanetary spacecraft ever built, the two spacecraft contain eighteen scientific instruments (12 in the orbiter and six in the probe) along with the sophisticated engineering subsystems required to support the ambitious, four-year investigation.
Cassini stands more than 6.7 meters high and is more than 4 meters wide (not including the magnetometer boom and antennas). The magnetometer instrument is mounted on an 11-meter boom that extends outward from the spacecraft. The three RPWS antennas extend 10 meters from the spacecraft.

The spacecrafts' combined mass is a total 5,574 kilograms (Huygens' mass is 349 kilograms) - more than 50 percent of which is propellant. The power source for the orbiter is a set of three radioisotope thermionic generators. Their combined output is roughly 700 watts, which supplies the orbiter instruments and engineering subsystems.

The orbiter contains two completely independent propulsion systems. The bipropellant system utilizes a 400 Newton main engine for trajectory control and is capable of burns from 0.5 meters per second up to greater than 600 meters per second (the orbit insertion burn was 626 meters per second). The monopropellant system feeds an octet of one Newton thrusters and is used for attitude control and for small (less than 0.5 meters per second) maneuvers for trajectory control. For precise attitude control, the orbiter relies on reaction wheels.

The orbiter has separate computers for attitude control and for command and data handling. Two solid-state recorders, each with a capacity of two gigabits, provide data storage. Communication capability is provided by an

X-band (8 gigahertz) transmitter that has data rate capabilities of up to 160 kilobits per second and a receiver than can accept command loads at up to 500 bits per second.

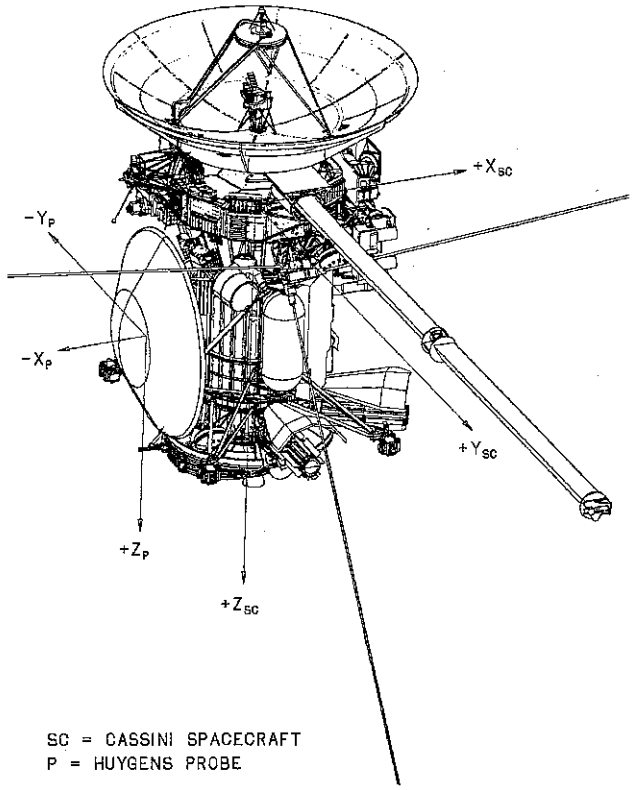


FIGURE 2. The Cassini-Huygens Spacecraft

The Cassini orbiter's engineering subsystems have been built and tested to the highest standards to assure mission performance throughout the lengthy cruise and the demands of the orbital tour. Each critical engineering component is redundant.

Most of the orbiter instruments (See Table 1) can be conveniently divided into two categories: remote sensing (i.e. cameras and radar) and fields and particles (e.g. dust detectors and magnetometers). Cassini's remote sensing instruments include cameras and spectrometers that span the far infrared through deep ultraviolet and also include an imaging radar that can cut through Titan's hazy atmosphere to map portions of the surface. The fields and particles instruments contain a dust detector and suite of instruments for measuring the magnetic and electrical properties of Saturn's environment. Also included in the fields and particles category is an instrument that will sample and analyze the outer reaches of Titan's atmosphere. The radio science experiment fit nicely within either category. It uses radio waves to measure masses of the satellites and to probe Saturn's and Titan's atmosphere.

**TABLE 1.** The Cassini orbiter instruments and their area of study

| Instrument | Area of Study at Saturn |
|---|---|
| Cassini Plasma Spectrometer (CAPS) | Explores plasma within and near Saturn's magnetic field. |
| Composite Infrared Spectrometer (CIRS) | Studies temperatures and compositions of Saturn and its moons and rings. |
| Cosmic Dust Analyzer (CDA) | Studies ice and dust grains in and near the Saturn system. |
| Dual Technique Magnetometer (MAG) | Studies Saturn's magnetic field and its interactions with the rings, the moons, and the solar wind. |
| Imaging Science Subsystem (ISS) | Takes pictures in visible, near-ultraviolet, and near-infrared light. |
| Ion and Neutral Mass Spectrometer (INMS) | Studies extended atmospheres and ionospheres of Saturn, Titan, and icy satellites. |
| Magnetospheric Imaging Instrument (MIMI) | Takes images of the distribution of charged particles in and near Saturn's magnetic field. |

| | |
|---|---|
| RADAR | Maps the surface of Titan and measures the height of its surface features. |
| Radio and Plasma Wave Science (RPWS) | Investigates plasma waves, natural emissions of radio energy, and dust. |
| Radio Science Subsystem (RSS) | Searches for gravitational waves; measures masses and internal structures of Saturn and satellites; structure of atmospheres. |
| Ultraviolet Imaging Spectrograph (UVIS) | Studies structure, chemistry, and composition of atmospheres, surfaces, and rings. |
| Visual and Infrared Mapping Spectrometer (VIMS) | Identifies chemical composition of atmospheres, surfaces, and rings. |

The Huygens probe is a complete spacecraft in its own right although it does not contain active attitude control nor propulsion systems. Designed purely as an atmospheric probe, it depends on the Cassini orbiter for it transportation and power during the cruise to Titan. It will be spin stabilized during its coast phase. During its passage through Titan's atmosphere, it will rely on a heat shield and parachutes to control its descent.

During its mission, the power source for the probe is a set of five lithium-sulphur dioxide batteries capable of 1800 watt-hours. The probe contains two redundant command and data handling systems and transmits its data over two separate S-band (2 gigahertz) channels with 10 watts of power in each channel. The probe contains six instruments, the majority of which are designed to determine the chemical and physical properties of Titan's atmosphere. It also contains a descent imager that will obtain over 1,000 images of Titan's surface during the descent plus a surface science package that will measure the physical properties of the surface if the probe survives the impact (about 5 meter per second) impact with the surface.

**TABLE 2.** The Huygens probe instruments and their area of study

| Instrument | Area of Study at Titan |
|---|---|
| Aerosol Collector and Pyrolyser (ACP) | Collects Titan's aerosols for chemical composition analysis. |
| Descent Imager/Spectral Radiometer (DISR) | Makes spectral measurements and takes pictures of Titan's surface and atmospheric hazes. |
| Doppler Wind Experiment (DWE) | Uses radio signals to deduce wind speeds on Titan. |
| Gas Chromatograph/Mass Spectrometer (GCMS) | Identifies and quantifies various atmospheric constituents on Titan. |
| Huygens Atmospheric Structure Instrument (HASI) | Measure the physical and electrical properties of the Titan atmosphere. |
| Surface Science Package (SSP) | Determines the physical properties of Titan's surface. |

## THE MISSION - EARLY CRUISE

Even the most powerful rocket in the U.S. arsenal of launch vehicles cannot provide enough energy to put a spacecraft as massive as Cassini-Huygens on a direct trajectory to Saturn. Mission designers had to devise an alternate means to get the full suite of scientific instruments to Saturn.

The ingenious solution is a gravity assist trajectory. The idea is to use close flybys of intermediate planets in such a way as to augment the spacecraft's energy. Such trajectories have been utilized for several decades in missions such as the Mariner-10 mission to Mercury, which used Venus to slow down the spacecraft allowing it to reach Mercury, and the Galileo mission to Jupiter, which used a combination of Venus and Earth flybys to achieve enough orbital energy to reach Jupiter. The trick is to find the correct combination of intermediate flybys.

In the Cassini-Huygens' case, as with the Galileo mission to Jupiter, it turned out that the most efficient design was to use the launch vehicle to decrease the spacecraft's helio-centric energy. This somewhat counterintuitive approach lowered the spacecraft's orbit sufficiently to encounter Venus. Subsequent flybys of Venus and Earth could then be used to augment the spacecraft's energy until it finally achieved sufficient energy to reach Saturn. After its launch in October 1997, Cassini performed two gravity-assist flybys of Venus - one in April 1998 and one in June 1999, a flyby of Earth in August 1999 and a flyby of Jupiter in December 2000. With each flyby, Cassini's Sun-relative energy was increased until it had enough energy to reach Saturn.

The benefit of a gravity assist trajectory is that a significantly greater payload mass can be delivered to Saturn; the penalty is time. The Voyager spacecraft spent between three and four years to reach Saturn using a single gravity assist of Jupiter. It took Cassini-Huygens over 6.5 years.

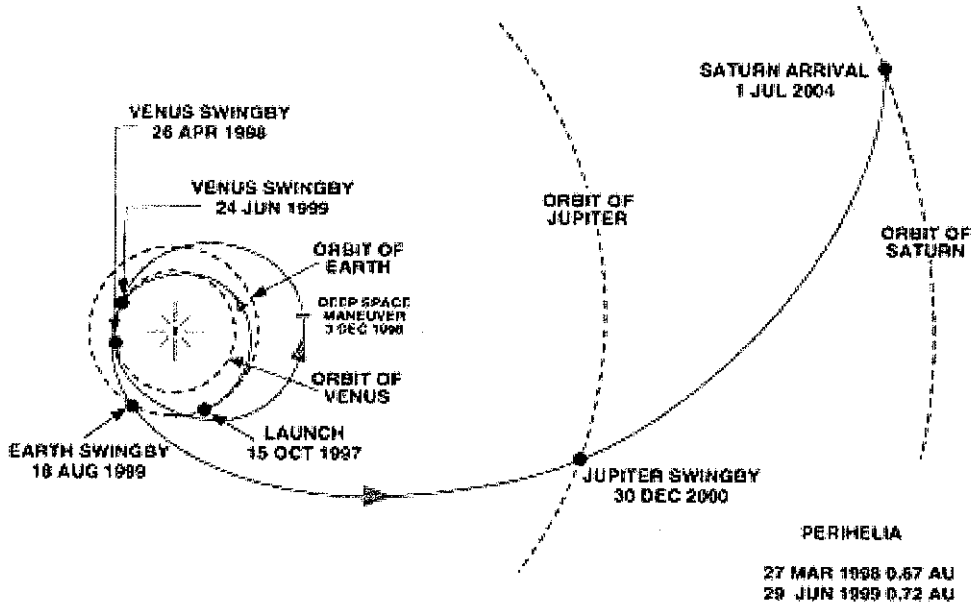


FIGURE 3. The Cassini-Huygens Interplanetary Trajectory

The interplanetary cruise was far from idle. The first 22 months of the cruise were spent managing the very strict engineering and navigation requirements of the three inner-planet flybys. As the flight team became more familiar with the spacecraft and its instruments, more science observations were possible and a significant observation campaign was executed during the second Venus flyby and the Earth flyby.

After the Earth flyby in August 1999, the flight team turned its attention completely to developing the capabilities for the Saturn mission. Per plan, the development of some significant ground and flight capabilities had been deferred until after launch. The project's focus now turned to developing the ground and flight software and detailed mission plan necessary for the orbital tour.

The flyby of Jupiter was an excellent opportunity to prototype some of the processes and software that would be used at Saturn and at the same time allow the planetary science community to capitalize on a unique opportunity. The Galileo mission had been performing a detailed study of the Jovian system since it began orbiting Jupiter in 1995. The spacecraft had greatly exceeded its lifetime expectations and was approaching the end of its extended mission. In response to proposals from Cassini and Galileo scientists, NASA extended funding to the Galileo mission to support a joint observation campaign of the giant planet. For one hundred days centered on December 30, 2000 the two spacecraft performed joint observations of the giant planet – a first time event in outer planet space exploration history. While Galileo orbited Jupiter deep within its extensive magnetic field, the Cassini-Huygens spacecraft entered and exited the magnetic field several times while performing simultaneous observations with Galileo. This first set of "inside-outside" measurements coupled with a coordinated ground campaign yielded new insights into the solar system's largest planet.

The Jupiter flyby was a complete success both scientifically and in the knowledge the flight teams were able to glean in learning how to plan and execute complex science sequences. One aspect of the science planning challenge became very clear. The 1992 redesign of the orbiter that had rigidly fixed all the instruments onto the spacecraft frame would now require an unprecedented amount of cooperation between the various orbiter instruments. If one instrument were to orient the spacecraft for a particular observation, the other eleven instruments would have to follow along. This presented a daunting planning challenge: how to allocate observing time to meet all the science objectives of the mission. The planning team divided the tour into segments and multi-disciplinary teams prepare

detailed plans for each segment that took maximum advantage of shared opportunities. The effort took three years to complete but the result was an integrated plan that allowed each investigation to meet its science objectives.

## THE HUYGENS MISSION

After orbit insertion, the Cassini orbiter will make two close flybys of Titan, one on October 26, 2004, and another on December 13, 2004. Extensive orbiter science will be performed at these two flybys but of equal importance is that the flybys will setup the proper trajectory conditions for the Huygens probe mission.

After seven years as a passenger on the side of the Cassini orbiter, Huygens will be released towards Titan on December 24, 2004. After release, the only active component on board the probe will be its "coast" timer which will have been set to awaken the probe just prior to its Titan encounter on January 14, 2005, 22 days after separation. Springs in the separation devices on the orbiter will give the probe a spin rate of about seven revolutions per minute, which will stabilize it during its coast and early atmospheric entry.

At the time of release, both the orbiter and probe are on a Titan impacting trajectory. After release, the orbiter performs a maneuver to raise its Titan flyby altitude to 60,000 kilometers and to slow it down so that it will arrive at Titan slightly later than the probe. This sets up the appropriate geometry for the relay link between the orbiter and probe.

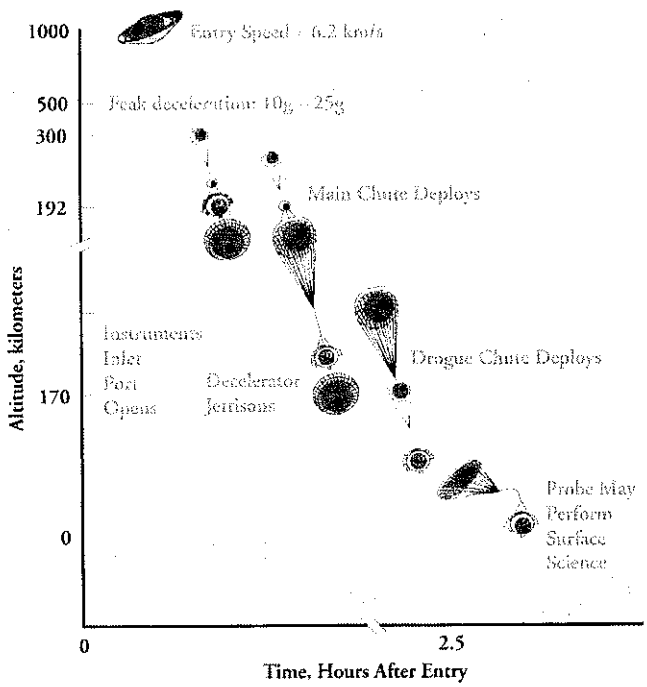


FIGURE 4. Huygens Descent

The descent timer will awaken the probe about four hours prior to reaching the upper layers of Titan's atmosphere. Accelerometers in the probe avionics will then trigger the descent sequence as the probe encounters Titan's atmosphere and begins to slow down. The heat shield will protect the enclosed descent module from the extreme temperatures generated during entry. At about Mach 1.5, the parachute sequence will be initiated. See Figure 4. The radio transmission from the probe will begin after the main chute opens. For at least the next two and one half hours, in a precisely choreographed *pas de deux*, the Cassini orbiter will track the descending probe's landing site with its high gain antenna as it flies over the descending probe. Meanwhile, below on Titan the probe samples and analyses Titan's thick atmosphere and transmits the data to the orbiter. Cassini will receive Huygens measurement and image

data and store it on the solid state recorders. After Cassini has flown past Titan, it will turn to Earth and play back the probe data.

## THE ORBITAL TOUR

After dropping off Huygens, Cassini resumes the orbital tour. For the next 3.5 years, there are another 43 close flybys of Titan interlaced with 76 orbits of Saturn. The orbiter uses the low altitude flybys of Titan to not only study Titan but also to also reshape the trajectory to explore the icy satellites, map the magnetosphere and then to erect a transfer to a very high inclination set of orbits to study the rings. There are five close flybys of the icy satellites and numerous other observation opportunities with altitudes lower than 100,000 kilometers.

A typical (Earth) day in the life of the orbiter is for it to spend roughly 14 hours performing remote sensing observations. During this period of time, it is out of contact with Earth while the imaging instruments are pointed to their various targets. The data from these observations are stored on the solid-state recorders. For the remainder of the day (roughly eight to ten hours), the spacecraft points its high gain antenna to Earth and plays back the data off the recorders. The data are received at one of NASA's Deep Space Network (DSN) tracking stations, usually the Goldstone or Madrid complex.

## JUST THE BEGINNING

The orbital tour has only just begun and already Cassini-Huygens has made new discoveries. The preliminary analysis of the data from the close flyby of Phoebe, one of Saturn's outermost moons, the most detailed set of images of Saturn's rings ever seen, and the tantalizing, distant look at Titan from just over 300,000 kilometers away all promise that the Cassini-Huygens mission will rewrite the book on the Saturnian system.

For current information on the mission, visit the Cassini-Huygens websites at http://saturn.jpl.nasa.gov, http://www.nasa.gov/cassini, and http://huygens.esa.int/huygens.

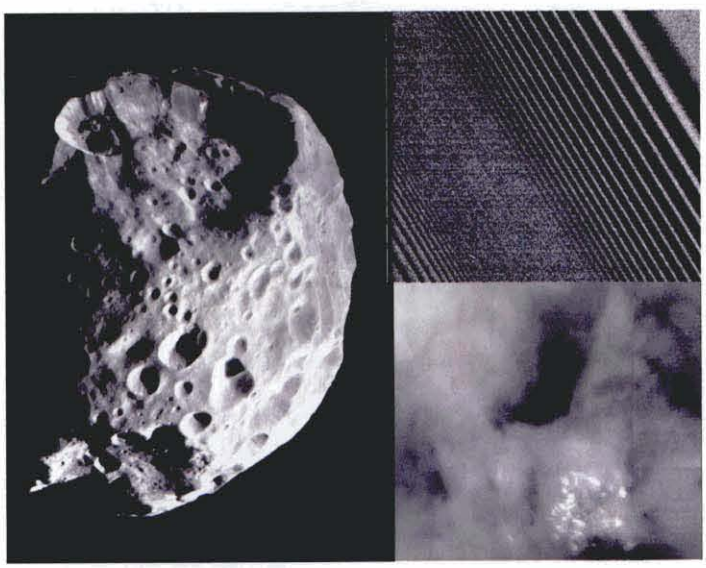

FIGURE 5. Early images from the Cassini-Huygens Mission. The battered moon Phoebe, wave structure in Saturn's rings, clouds over the south pole of Titan (NASA/JPL/Space Science Institute).

## ACKNOWLEDGEMENTS

The Cassini/Huygens mission is a joint undertaking by the National Aeronautics and Space Adminstration, the European Space Agency, and the Agenzia Spaziale Italiana. This work was carried out for the Cassini-Huygens Program at the Jet Propulsion Laboratory, California Institute of Technology under contract from the National Aeronautics and Space Administration.