PLANETARY PROTECTION TECHNOLOGY FOR MARS SAMPLE RETURN

Robert Gershman
Jet Propulsion Laboratory
California Institute of Technology
4800 Oak Grove Drive
Pasadena, CA 91109
(818) 354-5113
robert.gershman@jpl.nasa.gov

ABSTRACT

The NASA Mars Exploration Program has recently adopted a plan that includes a first Mars sample return (MSR) mission proposed for launch in 2013. Such a mission would deal with two new categories of planetary protection requirements: (1) assuring a very low probability of inadvertent release of the sample in order to provide extra protection against the extremely unlikely possibility of biological hazards in the returned material and (2) keeping the samples free of round-trip Earth organisms to facilitate confirmation of safety after return to Earth. This paper describes the planetary-protection-related technical challenges awaiting any MSR mission and describes work in progress on technology needed to meet these challenges. New technology is needed for several functions. Containment assurance requires breaking the chain of contact with Mars: the exterior of the sample container must not be contaminated with Mars material either during the loading process or during launch from the Mars surface. Also, the sample container and its seals must survive Earth impact corresponding to the candidate mission profile, the Earth return vehicle must provide accurate delivery to the Earth entry corridor, and the Earth entry vehicle must withstand the thermal and structural rigors of Earth atmosphere entry (all with an unprecedented degree of confidence). Sample contamination must be avoided by sterilizing the entire spacecraft, a challenge with modern avionics, or by sterilizing the sample collection and containment gear and then isolating it from other parts of the spacecraft.

TABLE OF CONTENTS

1. INTRODUCTION
2. MISSION CONCEPTS
3. CONTAINMENT ASSURANCE
4. SAMPLE CONTAMINATION AVOIDANCE
5. CONCLUSIONS
ACKNOWLEDGMENTS
REFERENCES

1. INTRODUCTION

In mid-1998 NASA initiated an ambitious science project to return rock and soil samples from Mars, using spacecraft scheduled for launch in 2003 and 2005. This was the first project since Apollo to come to grips with the

extraordinary planetary protection challenges associated with bringing to Earth extra-terrestrial material with a non-zero probability of containing life forms. In early 2000, the 2003/2005 Mars Sample Return (MSR) Project was terminated as part of replanning of the NASA Mars Program. It was replaced by a series of mission studies and a technology development program intended to pave the way for a future sample return project. This paper describes the progress made towards understanding and meeting MSR planetary protection challenges in the technology program. It should be recognized that all findings reported on here are preliminary results of work in progress and that no decisions on the design or implementation of a Mars sample return mission have been made by NASA.

All previous missions to Mars have responded to planetary protection requirements based on minimizing contamination of Mars with Earth organisms, but an MSR mission will also be called upon to deal with two new categories of planetary protection requirements. The first category requires protection of the Earth's biosphere from possible biological hazards in the returned samples. The NASA Planetary Protection Officer (PPO) provided a draft requirement to the 2003/2005 MSR project, calling for assurance that the probability of inadvertent release of a single Martian particle of size > 0.2 microns be less than 10^{-6}.

The second category evolves from the need to keep the returned sample free of round-trip Earth organisms in order to facilitate protocols to be run on the returned sample to confirm that it would be safe to release Mars material to science investigators. The PPO's draft requirements equated this to sterilizing the entire Mars Lander spacecraft to the same levels as achieved on the Viking mission using dry heat or some method shown to be equivalent. The PPO suggested that the requirement for complete sterilization might be waived if it could be shown that mission procedures would lead to a probability of less than 10^{-2} of having a single live round-trip Earth organism in the returned sample. Such a design would include sterilizing any hardware that would come in contact with the samples.

The 03/05 draft requirements have been adopted as goals in both the mission studies and the technology program.

2. MISSION CONCEPTS

The "Groundbreaking" mission concept (Reference 1) has been used as the framework for development of planetary protection systems and technologies. A brief description of this concept is presented here to provide a context for the planetary protection description,. Other recent mission concept studies are documented in references 2-6.

The Groundbreaking mission concept is depicted in Figure 1. Science requirements consist of returning 500 grams of sample consisting of rock, regolith, and atmosphere. Samples are collected by a simple scoop and sieve on an arm extended from the lander platform. A simple camera is used for aid in sample collection and establish context for reference. The scoop should be capable of obtaining sample a few 10's of cm's below the surface. The samples are placed in a single sample container, undifferentiated from each other. The container needs to be sealed, not only for planetary protection, but to retain a sample of Martian atmosphere. The surface mission is accomplished within two weeks.

The sample container (the "Orbiting Sample" or "OS") is transferred in free-space from the Mars Ascent Vehicle (MAV) to an Earth Return Vehicle (ERV) in low Mars orbit. There is more than a year for the ERV to locate the OS and perform the sample transfer. Direct entry of the sample to the earth's surface is planned using the Langley Earth Entry Vehicle (EEV) design described below – a robust design that does not require a parachute.

The Groundbreaking concept is being reassessed in light of findings by the two Mars Exploration Rovers. One change under consideration is sample collection by a small rover, which would significantly affect the sample contamination analysis by virtue of moving the collection point away from possible landing site contamination.

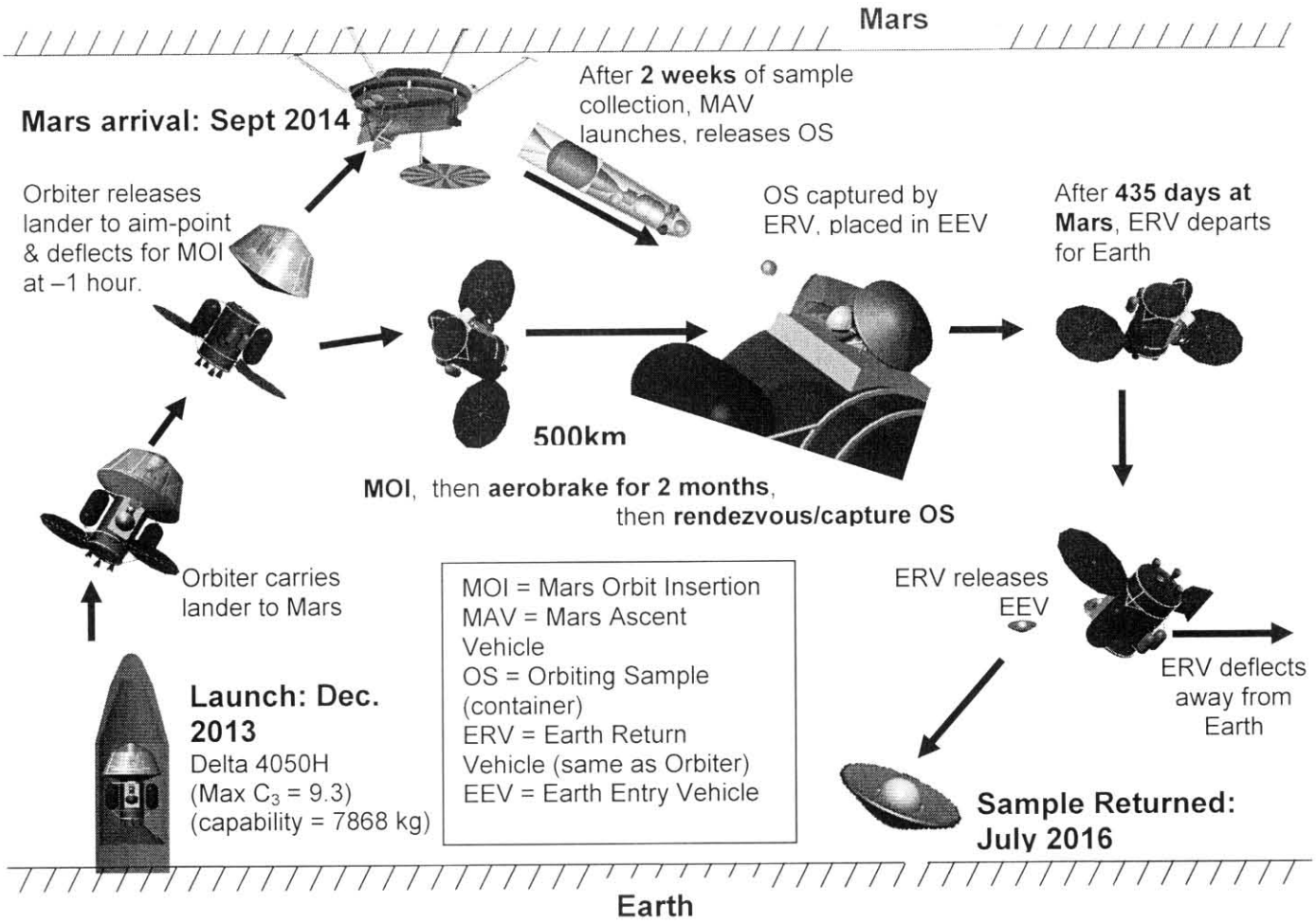

Fig. 1. Groundbreaking MSR Mission Scenario

3. CONTAINMENT ASSURANCE

Many elements of the MSR mission must be designed for high reliability in order to meet the containment assurance goal. All of these have been addressed in the mission studies and several are subjects of technology development tasks planned to provide the needed capabilities. Probabilistic risk assessment (PRA) techniques are being used to estimate the significance of each element relative to achieving the 10^{-6} goal and also to prioritize mitigation options and corresponding technology work. The following subsections describe the PRA as well as the top level containment assurance risk elements and planned mitigation.

PRA Applications and Results

The objective of the MSR containment assurance risk assessment was to provide guidance to the program in (1) improving the containment assurance likelihood for the mission, (2) illuminating those areas which dominate containment assurance risk to permit the best use of available resources to reduce this risk, (3) providing early assurance that the EEV design is credible, and (4) providing insights into the type of testing and further analysis that is required. The risk assessment addressed the likelihood of one undesirable outcome—the exposure of Earth's biosphere to Mars material. This undesirable outcome, or end state, is called "containment not assured" (CNA).

The fundamental approach used in the MSR risk assessment was that of scenario-based PRA. This approach has been used to assess the risk posed by various technologies since the mid-1970s, when it was successfully implemented to evaluate the risk of a core damage accident at nuclear power plants. PRA provides a numeric estimate with uncertainty, which is essential if meeting a risk goal must be demonstrated, as is the case for the EEV. The PRA can be used to focus the design process towards risk reduction by prioritizing competing design interests. For example, several changes in the EEV design have been made in part as a result of the PRA, including the switch to a high-heritage heat shield material, a revised canister design, inclusion of additional encapsulation/sterilization features, and additional emphasis on micrometeoroid protection technologies.

Because the risk assessment process parallels the technology development, the risk forecasts resulting from the analysis should be viewed as measures of achievement in a potential mature design within the class of designs analyzed and not as absolute measures of the risk achievement of a particular design. The value of the containment assurance risk assessed in the PRA should be interpreted as a measure of whether the achievement of the 1.0E-06 goal is judged to be feasible. The design also evolves in response to the PRA. A "baseline" design for containment assurance has been established and is described below. It incorporates several new technologies that mitigate elements identified as high risk in the PRA.

The MSR PRA model estimates a mean CNA probability of 1.3E-6 for the baseline design. This probability is contributed to by 180 cutsets that result from the solution of the fault tree model to a truncation level of 1.0E-15. Based on the uncertainty analysis performed as a part of this effort, the probability of CNA has a 5% - 95% range of 4.6E-7 to 2.7E-6. The first page of a 33-page fault tree is presented in Figure 2. Additional mitigation steps are being evaluated to bring the mean probability below 10^{-6}.

The overall conclusion of the risk assessment is that the baseline planetary protection architecture described below appears to be within reach of the containment assurance goal of 1.0E-6. That is, the gap between the assessed values and the goal is judged to be consistent with the amount of improvement possible in the analyzed design as it matures.

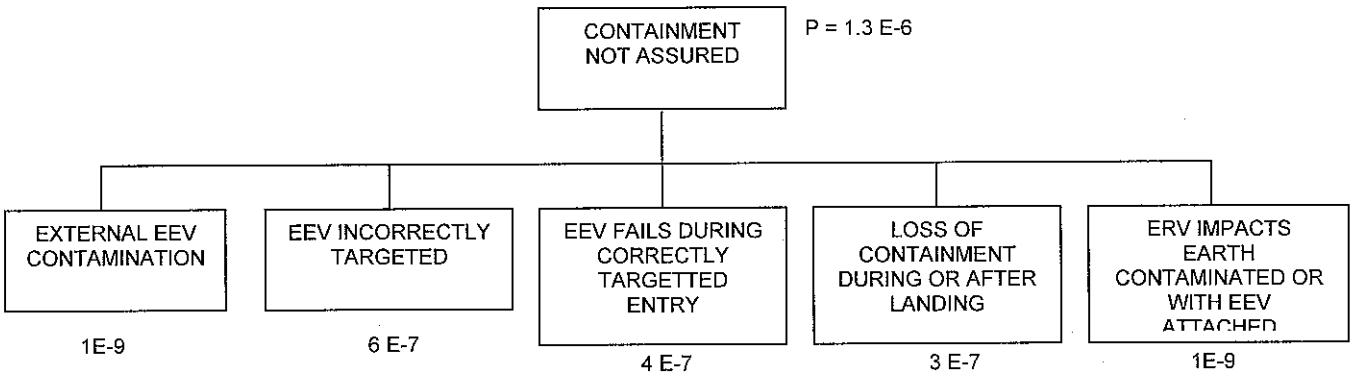

Fig. 2. PRA fault tree (page 1 of 33)

Breaking the Chain of Contact with Mars

Assurance is required that neither the exterior of the sample container nor any other element that might be exposed to the Earth's biosphere be contaminated with Mars material. The selected baseline approach involves placing a clean OS in Mars orbit for pickup and return by a clean ERV. The first step can be accomplished using a design that simultaneously seals the sample container and transfers it to an Earth-clean sector of the lander (which also contains the MAV payload compartment). This is illustrated in Figure 3. The samples are placed in a double-walled container ("the magazine"), which is open at one end. The

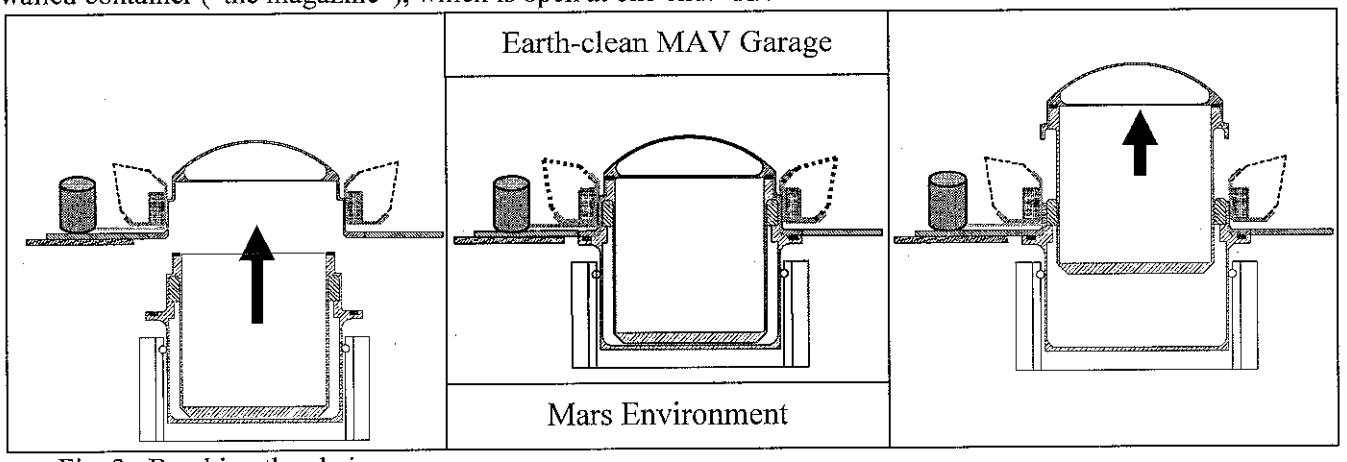

Fig. 3. Breaking the chain

magazine is inserted into a small airlock chamber attached to the side of the Earth-clean MAV garage. The inner wall of the magazine is also Earth-clean. An explosive welding process then simultaneously 1) seals a portion of the garage wall to the inner magazine as a lid, 2) seals the outer magazine to the garage, making it part of the

wall, and 3) separates the two parts of the magazine so the inner magazine can be placed in the MAV for launch. The technology program is developing the explosive welding process and also evaluating other sealing options including brazing and soft seals. While still on Mars, the sealed magazine would be placed in a second container that would also be sealed (by a different method). Both elements of the container and their seals are being developed in the technology program to survive (with high confidence) Earth impacts of 3500g which corresponds to the unlikely event of landing on a hard surface at maximum expected terminal velocity. Thus the MAV places a doubly sealed sample container (OS) in orbit with a very high probability (see next subsection) of no Mars material on any external surface. When the clean OS is collected by the clean ERV for return to Earth, the chain of contact with Mars will have been broken.

Tenuous issues of contamination of the sample container exterior and/or the Earth Return Vehicle (ERV) with Mars dust must be dealt with in order to confirm the validity of the baseline concept. The concern is that, when the Mars Ascent Vehicle (MAV) fairing is ejected, dust collected on its surface will migrate to the surface of the OS or possibly form a cloud around the OS that will stay with the OS until it is collected by the ERV in Mars orbit and packaged for Earth entry. In addition to concerns about dust adhering to the OS, there is concern that dust from the OS surface or cloud will contaminate the ERV.

While all of these mechanisms are believed to be rather improbable, work to date has not been adequate to eliminate them from further consideration. A comprehensive study of all conceivable contamination mechanisms is under way, with the intent of quantifying them for input to the PRA. For mechanisms that cannot be shown to be stochastically insignificant, the study will identify mitigation concepts. One strategy already being investigated involves use of the containment vessel (see below) to encapsulate any dust on the surface of the OS and designing the EEV to achieve surface temperatures that will sterilize any external contamination. Other options include design of the OS capture system to avoid transfer of dust to the ERV or EEV and development of a process to sterilize contaminated surfaces. (Such a process would have to be approved by the PPO.)

Earth Entry Targeting

The Mars-Earth return trajectory is biased to miss Earth in the event of ERV failure until shortly before the time for EEV release, when a final thruster firing targets the system toward the designated landing site on Earth. The ERV attitude is then adjusted and the EEV is spun up and released. The ERV then does another thruster firing to target itself away from Earth. Containment assurance risks can arise in several ways during this sequence. Navigation errors or maneuver execution faults could lead to release of the EEV on an entry trajectory beyond its design capabilities or to landing of the EEV in the ocean or other area where recovery by NASA would be difficult. Spacecraft faults leading to failure to release the EEV and to complete the deflection maneuver or to release in an incorrect state (spin, attitude, etc.) could result in loss of containment.

Analysis indicates that current navigation techniques will meet the planetary protection goal, but that some additional development is needed in areas of combining data types and parallel analyses. The technology program is also investigating methods to improve spacecraft component and system reliability to improve reliability and precision of maneuver execution and EEV release. The baseline design includes a battery-powered backup system that would release the EEV in the event of ERV failure after the Earth-targeting maneuver, relying on the EEV's self-orienting capability to achieve safe entry.

Earth Entry Vehicle

The EEV (Figure 4) is being developed in the technology program to withstand thermal and structural rigors of Earth atmosphere entry on a trajectory direct from Mars, reaching velocities during entry of up to 12 km/sec, and to preserve the integrity of the sealed sample container upon landing. The design is based on heritage from Apollo, Galileo, Stardust, and other entry probes. The PRA analysis has indicated a preference for a high heritage heat shield material, leading to selection of carbon-phenolic. The EEV system also includes the impact sphere, a shell of energy-absorbing material (Kevlar/graphite composite cells filled with low density carbon foam), which has been demonstrated in helicopter drop tests to attenuate the shock to the S/C from the planned 42 m/sec terminal velocity ground impact to under 3000g.

The baseline Earth Entry Vehicle (EEV) is a 0.9 meter diameter axisymmetric blunt body designed to protect the MSR sample container during Earth entry, descent, and landing. The EEV is released by the ERV onto an Earth-intercept trajectory, spin-stabilized at zero angle of attack. As shown in Figure 4, the EEV includes a carbon-phenolic forward thermal protection system (TPS) bonded to a carbon-carbon structure, an aft TPS (material TBD) with a removable lid for sample insertion, and an energy-absorbing sphere surrounding the sample container. The

simple, passive, robust design of the EEV allows it to perform its role with an extremely low probability of loss of sample containment.

Fig. 4. Earth Entry Vehicle

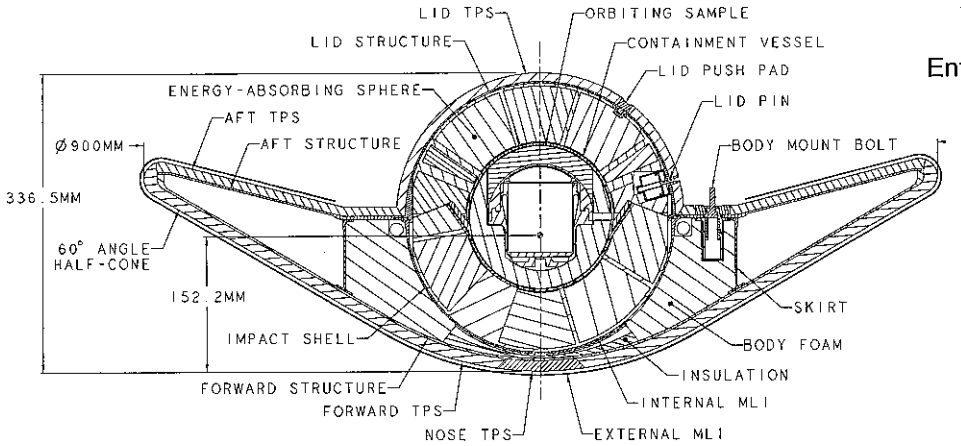

The intended flight path angle of the EEV at atmospheric interface is 25° below the horizontal, with a velocity of approximately 12km/s. Simulations of off-nominal conditions show the vehicle will aerodynamically reorient to the proper attitude before the entry heat pulse, even if spin-stabilized 180° backwards.

The carbon-phenolic TPS protects the EEV from the high aerodynamic heating on the forward surface of the vehicle, which reaches 1500 W/cm^2 at the stagnation point during the 30-second heat pulse. Carbon-phenolic specimens have been tested in the NASA Ames 60MW Interaction Heating Facility (Figure 5) at the full heat flux, and also at 50% heat flux for a duration selected to accurately simulate the total heat load conducted to the TPS bondline. Specimens behaved as expected and demonstrated successful performance for the EEV flight conditions (Figure 6.

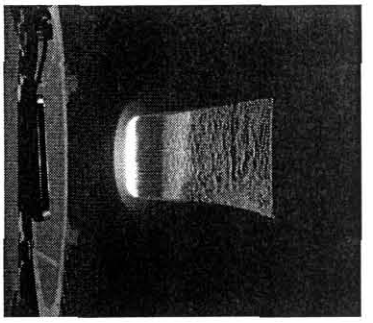

Fig. 5. Carbon-phenolic in arc jet

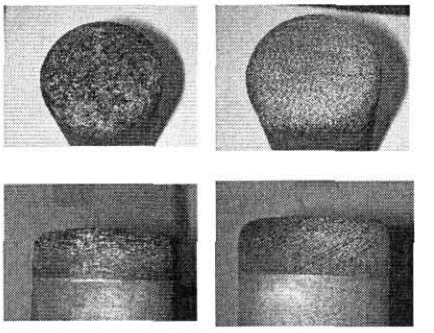

Fig. 6. Carbon-phenolic after testing

Thermal analysis results show that the surface of the EEV exceeds 2000°C everywhere forward of the vehicle shoulder, easily passing the sterilization condition of 500°C for 0.5 seconds. However, the heat flux is much lower on the aft surface. The base of the lid, the aft deck, and the aft ramp to the vehicle shoulder stay below 500°C; and the aft deck only reaches 170°C for the current vehicle design & trajectory. Several methods are being evaluated to raise the aft surface temperatures in case the analysis discussed above indicates a need to sterilize any Mars dust that may contaminate the outside of the EEV. The simplest approach appears to be a slight geometry change to increase the heating in the coolest regions (Figure 7). Thermal models indicate that the heat flux on the aft deck needs to increase 400% to raise the temperature to 500°C. Initial LAURA CFD results for a 45° ramp around the base of the lid show that this simple geometry change may increase the aft deck heat flux by 300-500%. Other geometries are being evaluated as well, as are alternative aft TPS materials with lower thermal conductivity that achieve higher surface temperatures for the same heat flux as well as steepening the entry trajectory.

The aft heat flux could also be increased to provide sterilization (if required) by steepening the entry trajectory, but this increases the flux over the entire vehicle surface, instead of only in the colder regions on the aft body. Steepening the trajectory from 25° to 90° (straight down) is predicted to raise the stagnation point heat flux by a factor of 1.7, to about 2500 W/cm^2. The higher maximum heat flux of the steeper entry is still well within the capability of the carbon-phenolic TPS, which saw 60-100KW/cm^2 on the Galileo entry probe at Jupiter, but exceeds the test capability of the preferred, arc-jet type of facility used to flight qualify TPS materials. Laser facilities such as the LHMEL II can produce sufficient heat flux, but do not simulate the ionized gases of the entry environment. A combination of tests in several facilities should be able to adequately test the materials if the steeper entry proves necessary to achieve the desired surface sterilization temperatures.

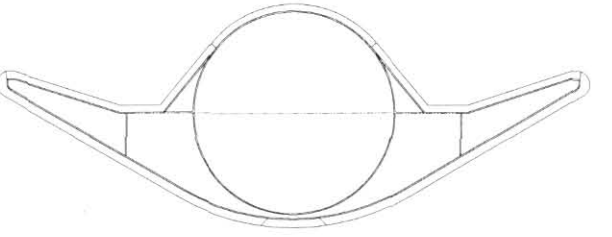

Fig. 7. EEV geometry change

The EEV structure supports the TPS and maintains the ballistic shape of the vehicle against the entry deceleration loads. The current design uses 2-D carbon-carbon, but titanium and other aerospace alloys are being considered due to the difficulties of developing analysis methods for analyzing progressive crack growth in 2-D woven carbon-carbon. Initial structural analyses in MSC/PATRAN and MSC/NASTRAN indicate that a titanium structure would require slightly less mass than the current carbon-carbon. A PRA evaluating the effect of this potential materials change on sample containment probability is planned in the near future.

Landing site selection requires a thorough analysis of environmental considerations which has not yet been carried out. Most of the landing work to date has utilized the Utah Test and Training Range (UTTR) as a prototype site. The low ballistic coefficient of the EEV produces a terminal velocity of approximately 42m/s. This is low enough that, for a landing on clay, deformation of the ground absorbs most of the kinetic energy and the deceleration of the samples is kept below the science goal of 2500-g's. Ground characterization tests & full-scale balloon drop tests of an EEV mass model were conducted at UTTR to verify this behavior. (Figure 8)

Fig. 8. Full-size EEV drop model at UTTR

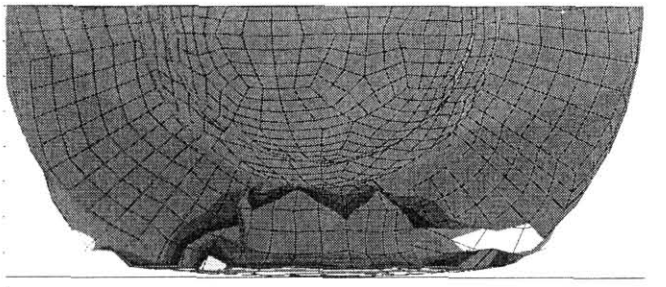

Fig. 9. Impact sphere modeling

The likelihood of missing the clay and hitting a hard object or one of the gravel roads crossing UTTR is low, but not low enough to achieve the desired mission reliability without additional impact protection. The EEV employs a cellular, energy-absorbing sphere to limit the loads experienced by the sample & containment vessel. During a hard surface landing, the sphere's Kevlar & graphite composite cell walls buckle and deform, keeping the deceleration of the samples below the containment-assurance level of 3500-g's as the sphere crushes. The sphere design has been extensively analyzed (Figure 9) and verified through full-scale tests at the Langley Impact Dynamics Research Facility, where a custom accelerator was built to achieve the desired impact velocity in the dense sea level air (Figures 10 and 11).

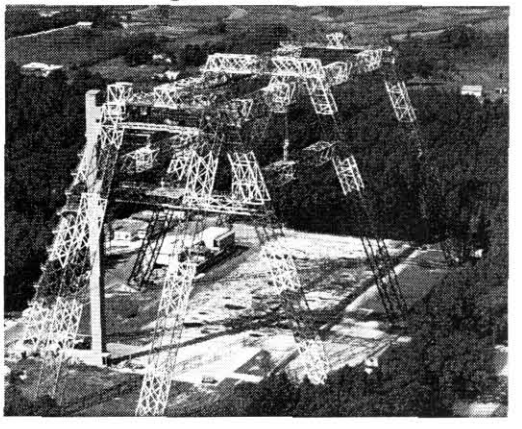

Fig. 10 Langley Impact Dynamics Research Facility

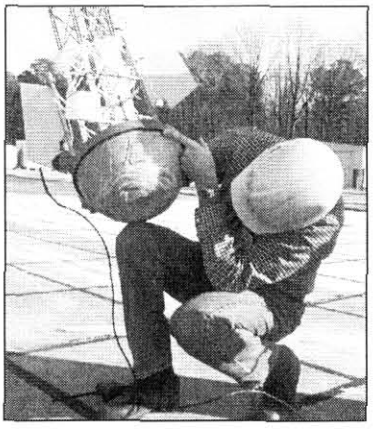

Fig 11. Drop test sample

Containment Vessel

The sample containers described above are rigid metal structures which might be vulnerable to impact on a sharp rock (although such an impact would have a low probability in target areas like UTTR). To mitigate the sharp rock concern, a third sealing element, know as the containment vessel (CV), will encapsulate the sample container when the EEV is closed on board the orbiter after rendezvous. The CV will be fabricated of high shear-capability material. The configuration of the CV and its placement in the EEV are illustrated in Figure 12. The CV is composed of two parts, a Top and a Bottom. The Top is bonded and sealed to the Impact Sphere Lid of the EEV and the Bottom is bonded and sealed to the EEV forebody. After insertion of the OS into the Bottom of the CV on Mars orbit, the Impact Sphere Lid is closed and secured. Following this, the Top of the CV is sealed to the Bottom. The reliability of making a good seal must be very high and the properties of the bond between the Top and Bottom parts of the CV must be capable of withstanding the dynamic loads associated with the EEV impact on the Earth. The bond/seal of the Top and Bottom parts of the CV to the Impact Sphere must be weaker than the bond between the two parts of the CV. Otherwise, on Earth impact, the CV lip bond may be broken by deformations in the Impact Sphere that do not free the CV from the Impact Sphere.

To increase the robustness of the overall containment assurance strategy, the CV should not share common failure modes with the other containment components. Hence, fiber or fabric reinforced elastomers have been chosen as the class of construction material for the CV. The adhesively sealed or vulcanized, elastomeric CV will be capable of withstanding very large amounts of deformation without rupture or leaking. If ground impact causes the OS to distort and leak, it will be sealed in an elastomeric "bag" capable of sustaining very large amounts of deformation without damage and resisting perforation by sharp objects.

A matrix of impact experiments have been performed to evaluate candidate elastomers for construction of the CV. Kirkhill Rubber Company has developed and supplied nine different types of plain and fabric/fiber reinforced elastomers for these tests. 12x12" plates of each elastomer were impacted at 40 to 50 m/s (maximum speed of EEV ground impact) with a two inch diameter, four inch long, rounded nose projectile. The elastomers were cooled to -40C before impact, representing the minimum expected temperature of the CV at ground impact. All elastomers failed (leaked after the impact) except for those constructed of phenyl modified silicone rubber. All three types of phenyl rubber (plain, fiber reinforce and cloth reinforced) survived the impacts without damage. This elastomer is the baseline material for construction of the CV.

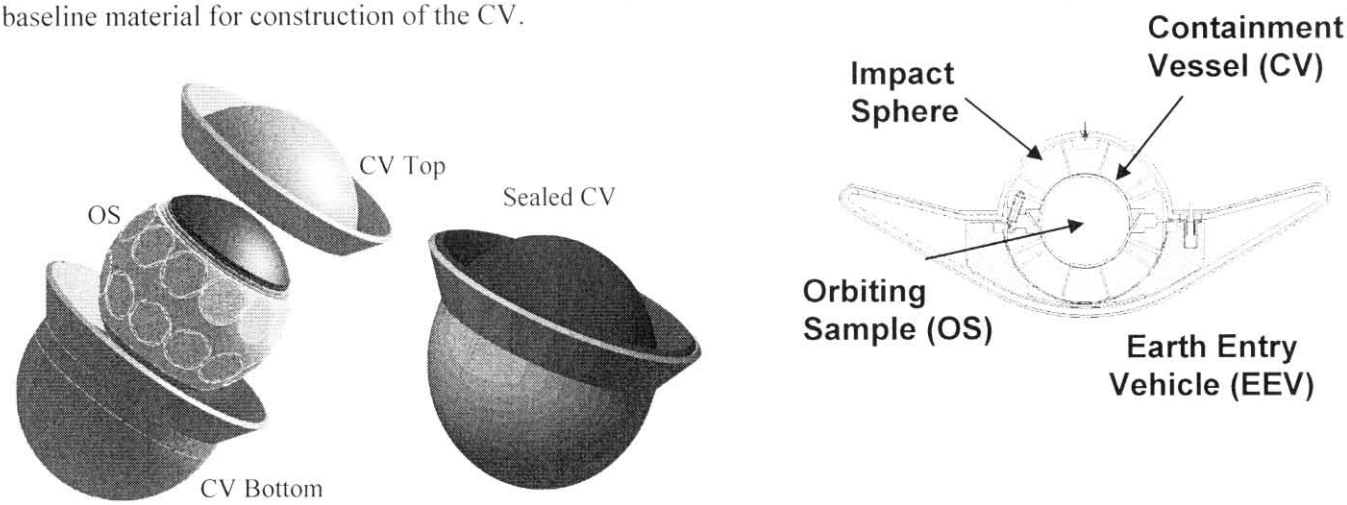

Fig. 12. Containment Vessel

A sterilization operation may be required before, during or after the sealing of the CV. This operation would be performed to sterilize any Mars dust that may have been deposited on the Impact Sphere or certain CV surfaces that will not be encapsulated by the CV sealing operation. Sterilization is envisioned to be exposure of the surfaces to >500C for at least 0.5 seconds by (1) the exothermic reaction of a "pyropaint", (2) designing the EEV such that the surfaces to be sterilized reach the required temperature from aerodynamic entry heating or (3) by appropriately located resistance heaters. Any of these approaches require the elastomeric CV material to be capable of withstanding a short exposure to 500C. Preliminary CV design and development work done at Kirkhill Rubber Company has identified a specially modified silicone elastomer, trade name "Fastblock", that is compatible with the phenyl silicone construction of the CV and is capable of withstanding 500C temperatures for extended periods of time. This material is the candidate for development and incorporation into the surface of the CV in selected areas to allow heat sterilization.

Meteoroid Protection

PRA studies have identified two areas of vulnerability to micrometeroid hits that may be significant to the 10^{-6} goal. The first is a possible perforation of the OS by a micrometeroid while in Mars orbit awaiting rendezvous. The analysis indicates that this can be mitigated by conventional shielding techniques. The second area is possible damage to the EEV heat shield, at any point in the mission that would degrade its performance during entry. In this area, the technology program is developing robust shielding techniques consistent with planetary protection goals, including methods for detecting hits so large as to be impractical to shield against.

In order to reduce the probability of critical TPS damage to 1×10^{-7} (an arbitrary allocation), the meteoroid shield would have to protect against the impact of meteoroids of several grams mass. Such a shield would be too massive and/or large for use on the EEV. The approach being taken to solve the meteoroid threat problem is to shield against all meteoroids that are less than a certain lethality (mass/velocity) and detect any breach of the shield

by more damaging meteoroids. With this approach, the shield can be sized to an acceptable mass and volume while assuring that the probability of mission termination due to shield breach would be < 0.0001.

Two types of generic shield designs have been investigated for protecting the TPS: two element spaced shields and compact foam core shields. A matrix of hypervelocity impact damage experiments, conducted to evaluate both types of shields, has been completed. This test matrix studied the tradeoffs between shield thickness and shield mass for both types of shields. The results demonstrate that complete protection against a 289 mg meteoroid, impacting at 5.5 km/s, can be provided by a 4 cm thick, 13 kg/m^2 foam core shield.

4. SAMPLE CONTAMINATION AVOIDANCE

As discussed in the introduction two alternative strategies have been suggested for satisfying the goal of avoiding sample contamination that would interface with hazard detection protocols. Both of these strategies were under development in the 2003/2005 project and are being pursued in the technology program. It is expected that measures taken for sample contamination avoidance will also help meet requirements for Mars contamination avoidance ("forward planetary protection").

Spacecraft Sterilization

While dry heat is the only sterilization technique officially recognized by NASA, most spacecraft designers believe it would be extraordinarily expensive to build a spacecraft with modern avionics that could be heat sterilized the way Viking was (~115°C for 40 hours). As an alternative, the capability to sterilize the appropriate elements of the MSR spacecraft with hydrogen peroxide is being developed. This work is looking both at the process for applying the sterilant effectively and at the threat H_2O_2 poses to spacecraft materials and components. The starting point is a commercially available low temperature (~ 45°C) vapor phase H_2O_2 sterilization process that is widely used by the medical industry to sterilize surgical instruments and biomedical devices. A development program is under way to establish process specifications for obtaining desired bioburden reduction from all spacecraft exposed surfaces.

Local Sterilization and Isolation

In this mode, the sample collection and containment gear would be sterilized and then isolated from other parts of the spacecraft. A key to this mode is the development of lightweight biobarrier technology at the component and system scales, up to the scale of a sample collection rover. Abiobarrier concept for a sample collector arm is illustrated in Figure 13. Materials and opening mechanisms for this concept are currently in test. Biobarriers may also be important in the spacecraft sterilization mode for isolation from the launch vehicle environment. Another key development is a technique for collecting clean samples from beneath a Martian surface possibly contaminated by migration of microbes from a "dirty" lander or rover. An interesting alternate path involves investigation of techniques to chemically tag spacecraft contaminants so that these could be recognized in the sample upon return. The techniques for sterilization of spacecraft subsystems being investigated are heat, vapor phase hydrogen peroxide, plasma, UV irradiation, and gamma radiation. Preliminary results are encouraging and work is continuing on all of these technologies.

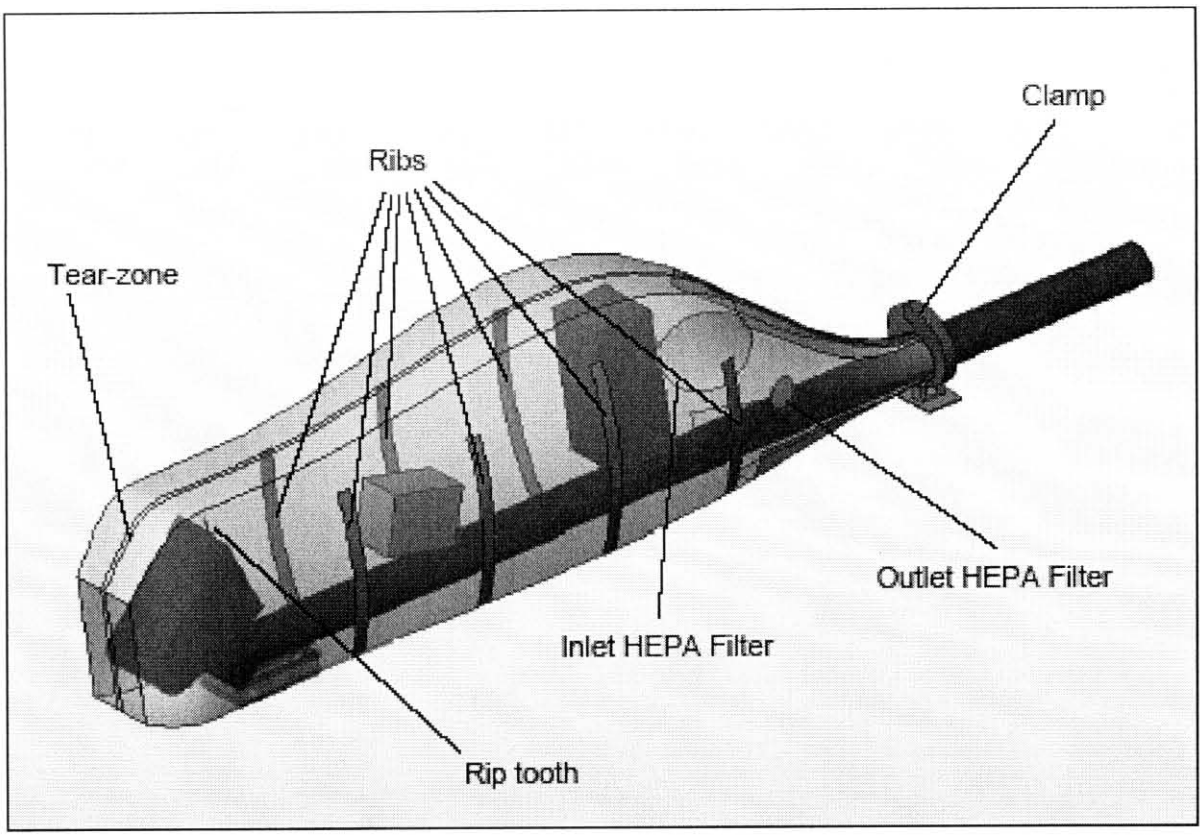

Figure 13. Biobarrier for Robotic Arm

The probabilistic requirement associated with local sterilization and isolation (10-2 probability of a single live roundtrip organism in the sample) calls for a capability for end-to-end modeling of microbe transport, dispersal, and survival that does not exist today. This is being addressede in technology program with a combined analytical and experimental modeling approach to such elements as microbial diversity in spacecraft assembly facilities, Prelaunch cleaning/sterilization effectiveness, survival during interplanetary flight and in the Mars environment, and dispersal on the Mars surface related to landing impact, wind, and robotic activities.

5. CONCLUSIONS

Mars Sample Return poses major challenges to the Planetary Protection community, but work conducted as part of the 2003/2005 MSR project and ongoing technology work indicate that these challenges can be met using affordable systems. PRA analysis indicates that, with reasonable success in the technology program, mission concepts such as those discussed above could meet the one-in-a-million containment assurance goal; and substantial progress has been made on both alternatives for meeting the sample contamination avoidance goal.

6. ACKNOWLEDGEMENTS

The author would like to acknowledge support from Samad Hayati and Richard Mattingly in the Mars Program Office at JPL as well as the contributions of numerous co-workers, particularly Marc Adams, Yosi Bar-Cohen, Roger Kern, and Bob Koukol at JPL, Jim Corliss and Robert Dillman at NASA Langley Research Center, and Joe Fragola and Joe Minarick at SAIC. Portions of this work were performed by the Jet Propulsion Laboratory/California Institute of Technology under contract with the National Aeronautics and Space Administration.

REFERENCES

1. Mattingly,R., S. Matousek, J. F. Jordan, Jet Propulsion Laboratory, California Institute of Technology, 4800 Oak Grove Drive Pasadena, CA 91109, "Continuing Evolution of Mars Sample Return", *2004 IEEE*

Aerospace Conference, March 6 – 13, 2004, Paper #2.0904.

2. Evanyo, J. A., Delamere, A., Gulick, D., Horsley, B., Fischer, C., Mann, D., Miller, K., Mitchell, S., Ball Aerospace, 1600 Commerce St., Boulder CO, 80301; Svitek, T., Stellar Innovations, Padavano; J., Delta Velocity; Whittaker, R., Carnegie Mellon University; Uphoff, C., Helleckson , B., Loucks , M., Boynton, J., Mungas, G., University of Colorado LASP, "Mars Sample Return, A Robust Mission Approach for 'Getting the Right Sample'", *IEEE Aerospace Conference, March 9 – 16, 2002* paper #514.
3. Sherwood, B., Pearson, D., Boeing Co.; Smith, D. B., SpectrumAstro; Greeley, R., Arizona State University; Whittaker, W., Carnegie Mellon University; Woodcock, G., Gray Research; Barton, G., Draper Laboratories, "Mars Sample Return: Architecture and Mission Design", *IEEE Aerospace Conference, March 9 – 16, 2002*, paper #515.
4. Sedivy, E., McGee, M., Sutter, B., Lockheed Martin Co.,"Mars Sample Return: Low Risk, Affordable Approaches", *IEEE Aerospace Conference, March 9 – 16, 2002*, paper #516.
5. Balmanno, W. F., Whiddon, W. B., Anderson, R. L., TRW Space and Electronics, Space Park Redondo Beach California 90278, "Mars Sample Return Mission Studies Leading to A Reduced-Risk Dual-Lander Mission Using Solar Electric Propulsion", *IEEE Aerospace Conference, March 9 – 16, 2002*, paper #517.
6. Oberto, R., "Mars Sample Return, A Concept Point Design by Team-X (JPL's Advanced Project Design Team)", Jet Propulsion Laboratory California Institute of Technology, 4800 Oak Grove Drive Pasadena, CA 91109, *2002 IEEE Aerospace Conference, March 9 – 16, 2002*, Paper #518.

BIOGRAPHY

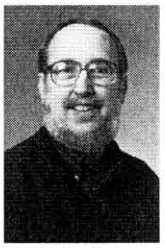

Robert Gershman is a Principal Engineer in the Mission Systems Concepts Section at JPL and is coordinating systems analysis and technology development for MSR planetary protection. Previous JPL positions have included Manager of the Planetary Advanced Missions Office, Deputy Manager of the Galileo Science and Mission Design Office, and Supervisor of the Mission Engineering Group. Before coming to JPL he was a Senior Research Engineer at Ultrasystems, Inc. and a Group Engineer in the Propulsion Department at McDonnell Douglas Astronautics Co. He has a BS in Chemical Engineering from Caltech and an MS in Aerospace Engineering from UCLA.