A 94 GHz RF Electronics Subsystem for the CloudSat Cloud Profiling Radar

Remi LaBelle[1], Ralph Girard[2], Graham Arbery[3]

[1]Jet Propulsion Laboratory, California Institute of Technology, 4800 Oak Grove Dr., Pasadena, CA 91109, USA, (818) 354-1615

[2]Canadian Space Agency, Space Technologies, 6767 Route de l'Aeroport, Saint-Hubert, PQ, J3Y 8Y9, Canada, (450) 926-4654

[3]COM DEV Limited, 155 Sheldon Dr., Cambridge, ON, N1R 7H6, Canada, (519) 622-2300 x2138

***Abstract* — The CloudSat spacecraft, scheduled for launch in 2004, will carry the 94 GHz Cloud Profiling Radar (CPR) instrument. The design, assembly and test of the flight Radio Frequency Electronics Subsystem (RFES) for this instrument has been completed and is presented here. The RFES consists of an Upconverter (which includes an Exciter and two Drive Amplifiers (DA's)), a Receiver, and a Transmitter Calibrator assembly. Some key performance parameters of the RFES are as follows: dual 100 mW pulse-modulated drive outputs at 94 GHz, overall Receiver noise figure <5.0 dB, a highly stable W-band noise source to provide knowledge accuracy of Receiver gain of <0.4 dB over the 2 year mission life, and a W-band peak power detector to monitor the transmitter output power to within 0.5 dB over life. Some recent monolithic microwave integrated circuit (MMIC) designs were utilized which implement the DA's in 0.1 um GaAs high electron-mobility transistor (HEMT) technology and the Receiver low-noise amplifier (LNA) in 0.1 um InP HEMT technology.**

Test results for the RFES receiver are also presented, along with photos of the finished flight hardware.

I. Introduction

CloudSat is a new low earth orbit (LEO) satellite mission and is a joint development of the National Aeronautics and Space Administration (NASA), the Jet Propulsion Laboratory (JPL), and the Canadian Space Agency (CSA). The CloudSat mission will provide the first global measurements of cloud profiles over the Earth. To detect weakly reflecting clouds, a Cloud Profiling Radar (CPR) is used [1]. CloudSat will be launched together and fly in formation with the CALIPSO spacecraft, which will carry an aerosol lidar. A similar cloud radar was previously developed for an airborne application [2], but the CPR is the first spaceborne W-band radar.

The CPR is a 94-GHz nadir-looking radar that measures the power backscattered by clouds as a function of distance from the radar. A simplified block diagram of the overall CPR, depicted in Fig. 1, shows how the Radio Frequency Electronics Subsystem (RFES) interfaces with the other radar subsystems. Three features improve the CPR detection capabilities to enable cloud detection from space: 1) Use of a very high frequency (94 GHz); 2) High-power (1.75 kW) Extended Interaction Klystrons, and 3) High sensitivity from a low-loss quasi-optical transmission line (QOTL) antenna feed [3] and a very low noise receiver front-end. This paper describes the RFES design and how some key technologies were employed to meet the subsystem performance requirements.

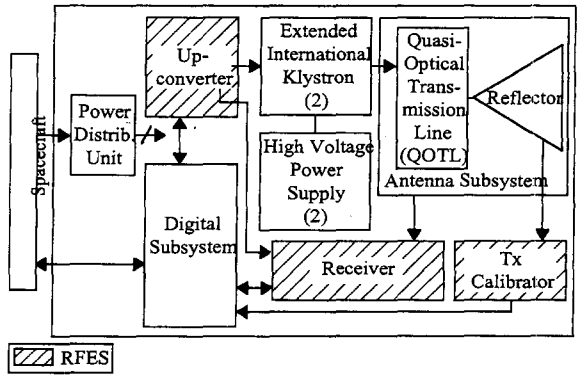

Fig. 1. Simplified CPR Block Diagram

II. Subsystem Design

The RFES consists of an Upconverter, which includes an Exciter and two Drive Amplifiers (DA's) to feed the redundant High Power Amplifiers (HPA's), a Receiver, and a Transmitter Calibrator assembly. Some key performance parameters of the RFES are as follows: dual 100 mW pulse-modulated drive outputs at 94 GHz, overall Receiver noise figure <5.0 dB, a highly stable W-band noise source to provide knowledge accuracy of Receiver gain of <0.4 dB over the 2 year mission life, and a W-band peak power detector to monitor the HPA output power to within 0.5 dB over life. In order to achieve the output power and noise figure requirements, some recent MMIC designs were utilized which implement the amplifiers in 0.1 um GaAs high electron-mobility transistor (HEMT) technology, for the medium power amplifiers (MPA) [4] and 0.1 um InP HEMT technology for the low noise amplifier (LNA) [5].

A. Upconverter

The Exciter generates a low-noise 91.8 GHz local oscillator, used for both upconversion and downconversion, by multiplying up the output from a 15.3 GHz phase-locked oscillator (PLO). The PLO is phase-locked to a 10 MHz ultra-stable oscillator (USO) as shown in Fig. 2. In order to minimize the number of new components to qualify for space, the same GaAs whisker diodes are used

in the x6 W-band multiplier and the waveguide mixer. The x6 multiplier is implemented as a x3, followed by a 46 GHz HEMT amplifier followed by a x2 multiplier, yielding a net gain of about 0 dB. The single-balanced mixer is constructed with a diode pair, resulting in reasonable conversion loss (8 dB) and high RF-LO isolation (25 dB). A pulse modulated S-band IF is generated from a 2.25 GHz PLO and a PIN diode switch, controlled by a baseband pulse from the CPR digital subsystem. The S-band IF is then upconverted to 94 GHz and passively split for the waveguide runs to the DA's. Another cost-saving measure was to use a common MPA design in the LO amplifier, the output pre-amplifier, and in the DA's. Furthermore, the MPA itself is a cascade of 3 identical HEMT MMIC power amplifier devices. The last MMIC stage is operated close to saturation, thereby minimizing temperature and aging effects of preceding components in the upconversion chain. The DA's are placed physically close to the HPA's in order to minimize loss for the 100 mW drive outputs. The Exciter is packaged as a split-level assembly, with a W-band side and an IF side, as shown in Figs. 3 and 4.

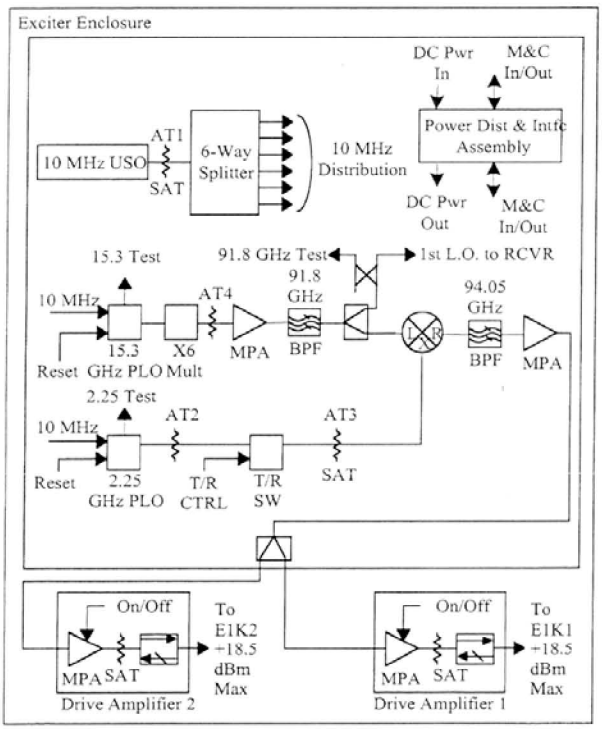

Fig. 2. Upconverter Block Diagram

B. Receiver

The Receiver [5] provides low-noise amplification and downconversion of the back-scattered 94 GHz pulses [6]. A transmit/receive (T/R) switch assembly is the first stage in the Receiver, in order to protect the LNA from the 2 W leakage pulses from the duplexer. A ferrite switch assembly is used for this since it has the best combination of fast switching time and low loss. The switch assembly is also used to inject the calibration signal, either a noise source or an ambient load. In order to achieve the image rejection requirements, a two-stage downconversion is employed, to translate the received pulses down to S-band and then to 100 MHz. A high precision Surface Acoustic Wave (SAW) filter is used to define the Receiver passband shape, which is tailored to control the range sidelobe levels. A FET switch is employed to limit the Receiver saturation during the transmit pulse. This minimizes the recovery time and so maximizes the instrument measurement time available. The Receiver block diagram is shown in Fig. 5. The Receiver is also packaged as a split-level assembly, with a W-band and IF side as shown in Figs. 6 and 7.

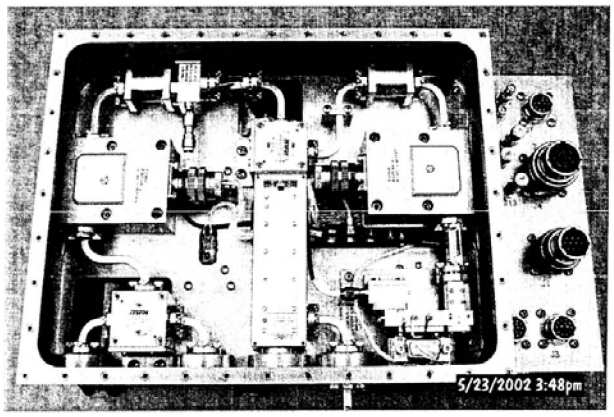

Fig. 3. Upconverter W-band side

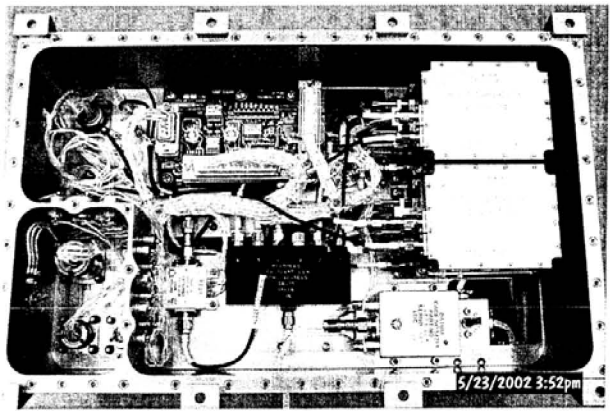

Fig. 4. Upconverter IF side

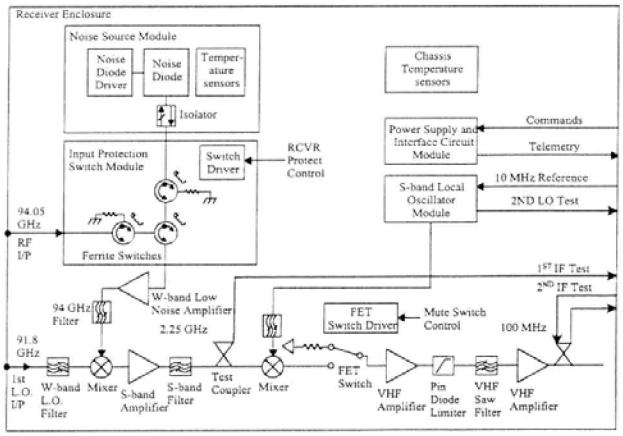

Fig. 5. Receiver Block Diagram

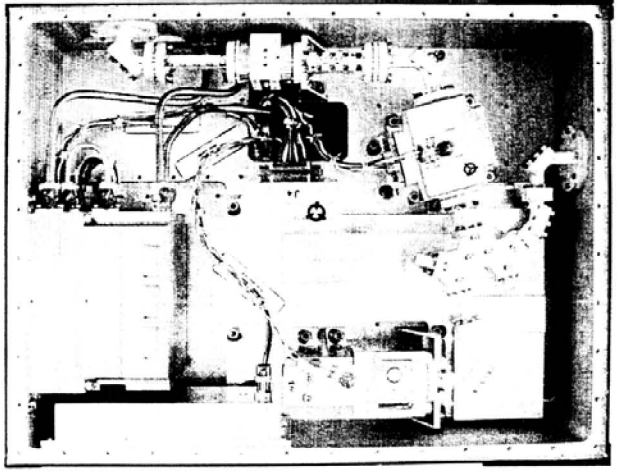

Fig. 6. Receiver W-band side

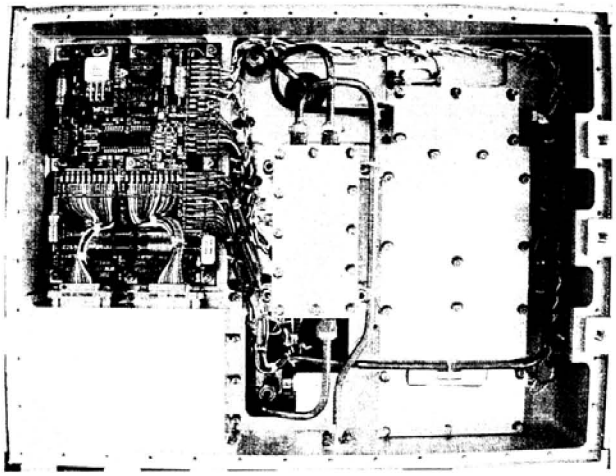

Fig. 7. Receiver IF side

C. Transmitter Calibrator

Science requirements call for an absolute calibration of the CPR to 2 dB. A key component of this calibration accuracy is knowledge of the transmitter output power. However, since the antenna feeds are implemented with quasi-optical transmission lines, there is no waveguide coupler available for a transmitter sample point. Instead, a small hole is cut in the main reflector with a section of WR-10 waveguide connecting to the Transmitter Calibrator assembly. The Calibrator then measures the transmitter power with a square-law detector and a broadband video amplifier. Eight samples are taken across the 3-usec pulsewidth in order to monitor the peak power and pulse shape over the mission life. A temperature sensor on the detector module will be used to correct for temperature sensitivity on orbit. There is also a hybrid ("magic T") coupler at the input to the Calibrator for direct access, thus allowing injection of a test signal back through the sample hole in the main reflector and the QOTL to the Receiver input. This is an important feature for system ground testing since there is no other way to inject a test signal into the Receiver once it is installed on the QOTL.

III. Design and Qualificatuion for Space

The RFES is subject to the normal constraints placed on space hardware of limited mass and DC power. However, the most challenging aspect of designing for space was finding components with flight heritage. For many of the W-band components, CloudSat is the first mission to use them in a space application. A table of the main RFES components with their suppliers and flight heritage is shown in Table 1. The general CloudSat parts approach was to use NPSL (NASA Parts Selection List) Level 2 parts (equivalent to MIL-STD-975, Grade 2) with PIND (Particle Impact Noise Detection), DPA (Destructive Physical Analysis), and X-ray upscreening. For the components with no previous flight history, customized screening and qualification tests were developed in order to meet the intent of NPSL Level 2 as closely as possible. This included life testing of wafer lot samples for the MMIC amplifiers used in the LNA and MPA. In addition, all semiconductors used were hermetically sealed, either in individual ceramic packages or overall sealed hybrid assemblies. In the case of the waveguide amplifiers, this was done using quartz waveguide windows with waveguide to microstrip transition probes etched on the windows.

Part	Assembly	Supplier	Flight Heritage
Input Protection Switch Module (ferrite switches)	RCVR	EMS Technologies	yes
Noise Source and Driver	RCVR	Micronetics / COM DEV	no
Low Noise Amplifier	RCVR	TRW / JPL	no
Medium Power Amplifiers	U/C	TRW	no
WR-10 Waveguide Filters	RCVR, U/C	COM DEV, MRI	yes
WR-10 Waveguide Mixer	RCVR, U/C	Spacek	yes
WR-10 Waveguide Passives	U/C, TX CAL	MRI	yes
W-band x6 Multiplier	U/C	Spacek	yes
W-band Detector	TX CAL	Spacek	no
S-Band Amplifier Module	RCVR	COM DEV	yes
S/VHF Mixer/Amp Module	RCVR	COM DEV	yes
SAW Filter	RCVR	COM DEV	yes
S and Ku-Band PLO	RCVR, U/C	Miteq	no
Ultra Stable Oscillator	U/C	Datum	yes
Power Distribution and Interface Boards	RCVR, U/C	COM DEV, JPL	yes

TABLE 1
PRINCIPAL SUPPLIERS

IV. Flight Subsystem Test Results

The Receiver is required to limit its output power during the transmit leakage pulse (to avoid stressing the following stages), recover quickly, and then provide a tightly controlled gain frequency response. Fig. 8 illustrates the output-limiting characteristic of the receiver. Fig. 9 is the time response of the receiver to the transmit leakage pulse, demonstrating rapid recovery with no ringing. Fig. 10 is the measured gain frequency response of the receiver, showing the very small deviation of this response from the theoretical ideal.

V. Conclustion

This paper has described some of the design challenges and test results for the CloudSat RFES subsystem. Although the architecture of the RFES is relatively simple, many of the W-band components are near the limits of current technology and are being used for the first time in a space application. Testing of the various flight assemblies within the RFES is complete and the units have been delivered to the CPR for system testing. Following CPR stand-alone testing, the instrument will be delivered to the CloudSat spacecraft at Ball Aerospace in early 2004, in preparation for launch in November, 2004.

Acknowledgment

The development described in this paper was carried out at the Jet Propulsion Laboratory, under a contract with the National Aeronautics and Space Administration, and at COM DEV, Ltd., under a contract with the Canadian Space Agency. The authors would also like to thank Harvey Endler and Manfred Richter at JPL and John Magliocco at COM DEV for subsystem design and test support.

References

[1] E. Im, S. L. Durden, C. Wu, and T. R. Livermore, "The 94 GHz Cloud Profiling Radar for the CloudSat mission," *2001 IEEE Aerospace Conference Proceedings*, March 10–17, 2001.

[2] G. A. Sadowy, R. E. McIntosh, S. J. Dinardo, S. L. Durden, W. N. Edelstein, F. K. Li, A. B. Tanner, W. J. Wilson, T. L. Schneider, G. L. Stephens, "The NASA DC-8 Airborne Cloud Radar: design and preliminary results," *Proc. of the International Geoscience and Remote Sensing Symposium (IGARSS)*, Singapore, Aug. 3–8, 1997.

[3] S. Spitz, A. Prata, J Harrell, R. Perez, and W. Veruttipong, "A 94 GHz Spaceborne Cloud Profiling Radar antenna system," *2001 IEEE Aerospace Conference Proceedings*, March 10–17, 2001.

[4] H. Wang, L. Samoska, T. Gaier, A. Peralta, H. H. Liao, Y. C. Chen, M. Nishimoto, R. Lai, "Monolithic power amplifiers covering 70–113 Ghz," *2000 IEEE MTT-S Int. Microwave Symp. Dig.*, Boston, MA, June, 2000.

[5] S. Weinreb, R. Lai, N. Erickson, T. Gaier, J. Weilgus, "W-band InP wideband MMIC LNA with 30K noise temperature", *1999 IEEE MTT-S Int. Microwave Symp. Dig.*, Anaheim, CA, June 1999.

[6] G. Arbery, S. Lam, I. D'Souza, "A 94 GHz receiver for a spaceborne cloud profiling radar," *Astro 2002 Conference Proceedings (CASI)*, 12–14 November 2002, Ottawa, Canada.

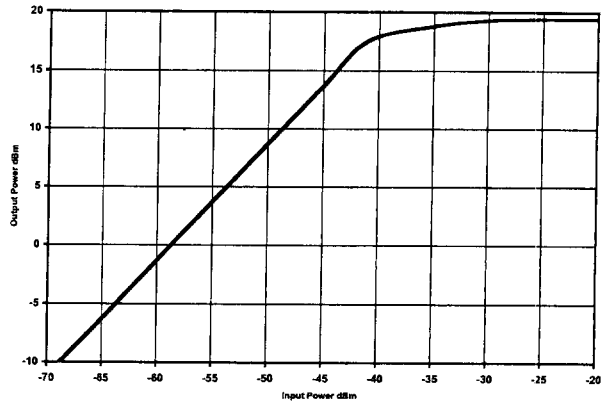

Fig. 8. Receiver Pout vs Pin

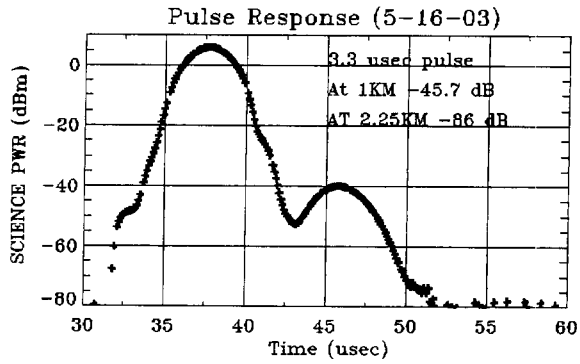

Fig. 9. Receiver Pulse Response

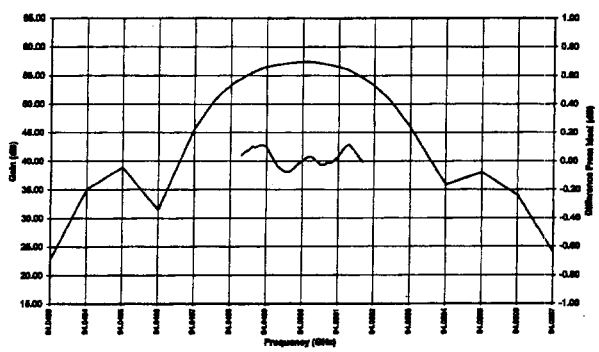

Fig. 10. Receiver Output Frequency Response