Heritage Adoption Lessons Learned, Active Mirror Telescope Cover Deployment and Latch Mechanism

James Wincentsen*

Abstract

The Active Mirror Telescope (AMT) task adopted the Cover Deployment and Latch Mechanism (CDLM) design as used on the Galaxy Evolution Explorer (GALEX) project. The three separate mechanisms that comprise the CDLM will be discussed in this paper in addition to a focus on heritage adoption lessons learned and specific examples. These lessons learned will be valuable to any project considering the use of heritage designs.

Introduction

The AMT task is a technology demonstration telescope that would use a one time deployable cover to protect the optics. Because the task was tracked for a fast technology development, the decision was made to fully adopt the GALEX cover deployment design early in the project cycle to save cost and schedule. For reference, the AMT aperture opening diameter is 0.83 m (32.7 in) and the outer diameter of the instrument is 1.1 m (43.3 in) in diameter, roughly twice the size of GALEX.

CDLM Overview

The three mechanisms that comprise the CDLM are the Latch, Hinge, and two Energy Absorbers. When the Latch releases the cover, two push off springs and the Hinge mechanism rotate the cover approximately 4.66 rad (267 deg) and impact the crushable honeycomb filled Energy Absorbers. Deployment time is approximately 3.4 seconds. The Hinge mechanism is un-dampened. After deployment, the cover remains against the canister. An overview of the instrument and placement of the mechanisms are presented in Figure 1.

Latch Mechanism

The Latch mechanism, attached to the cover, employs a Starsys paraffin thermal actuator as the prime mover. An interfacing slotted Latch Arm is affixed to the Cover Ring. The Latch Arm is spring loaded to rotate away from the aperture opening upon release. A detail view of the Latch area is shown in Figure 2, the Latch Arm is shown in Figure 3, and a cross section of the Latch mechanism is shown in Figure 4. The Locking Piston passes through and retains the Latch Arm. The Push Piston has a small diameter tip and passes through the Latch Arm slot. To deploy the cover, the actuator heater is energized, which translates both the Push Piston and Locking Piston, forcing the Locking Piston clear of the Latch Arm. Once the Locking Piston is clear of the Latch Arm, the Push Piston slips through the Latch Arm as it rotates. The mechanism locks open by means of torsion spring loaded arms that snap into a grove on the Locking Piston. Microswitches sense the motion of the arms and provide telemetry of the mechanism state.

Power to the actuator is discontinued once one of three criteria are meet: Hall effect sensors mounted on the Energy Absorbers register a deployed cover (discussed later), PRTs mounted on the actuator reach a maximum temperature, or exceed a time limiting circuit. Both the temperature and time are based on a look up table derived from thermal vacuum Latch test data. After power is terminated and the actuator cools, a Push Piston return spring resets the actuator for further ground testing. Resetting of the cover and Latch Arm is manually performed.

---

* Jet Propulsion Laboratory, Pasadena, CA

Proceedings of the 38th Aerospace Mechanisms Symposium, Langley Research Center, May 15-17, 2006.

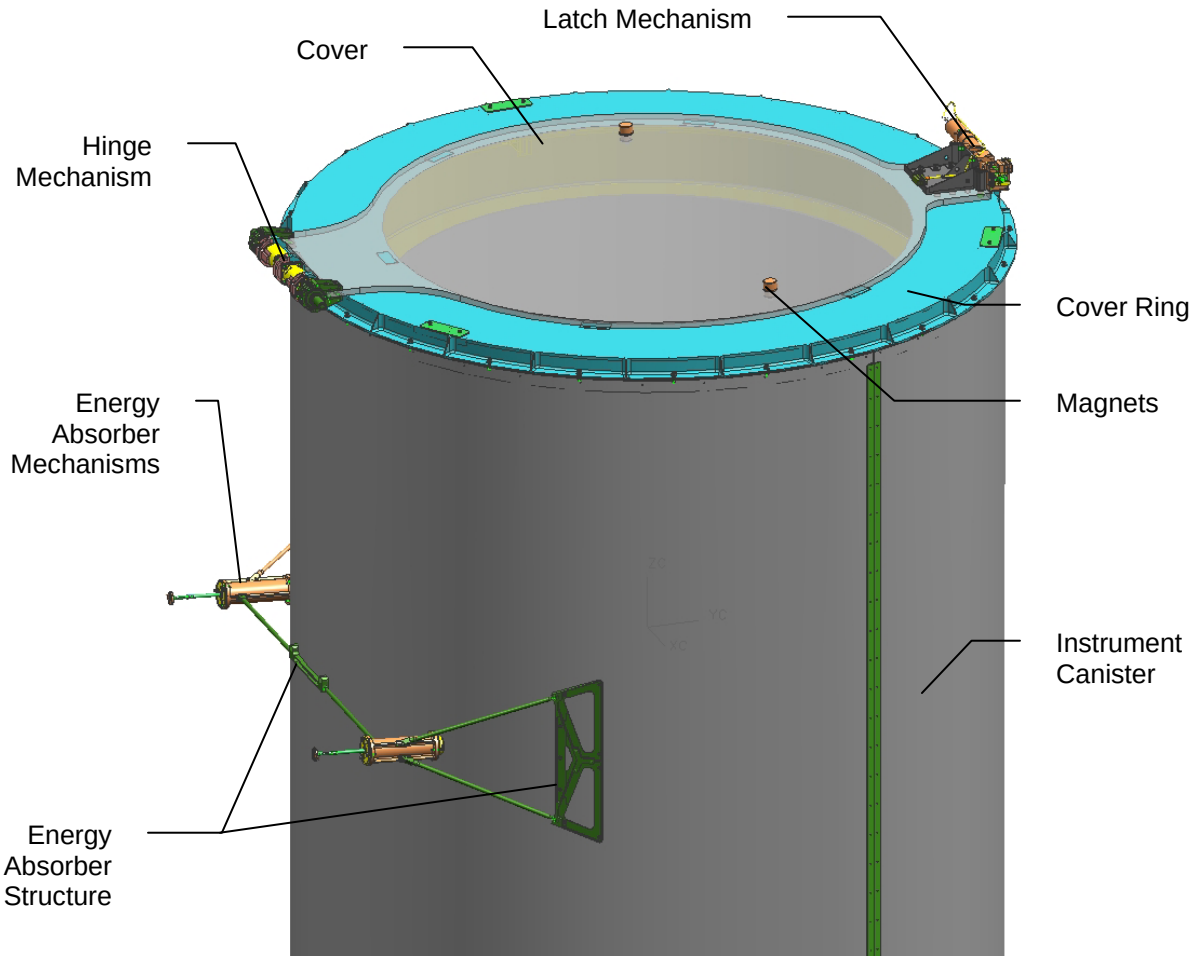

Figure 1. Cover Deployment and Latch Mechanism

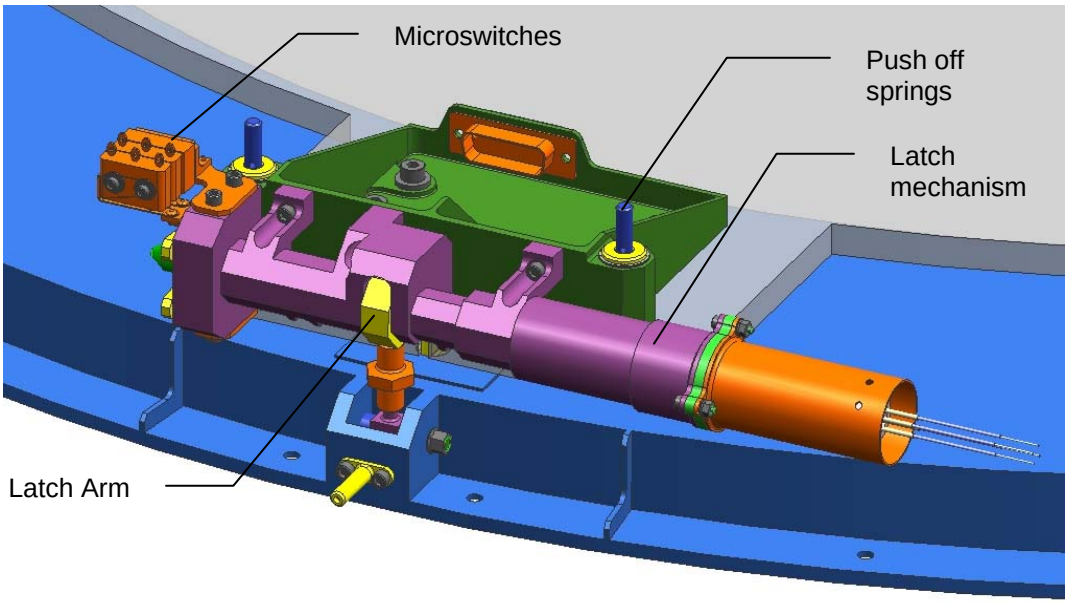

Figure 2. Latch mechanism and Cover/Cover Ring

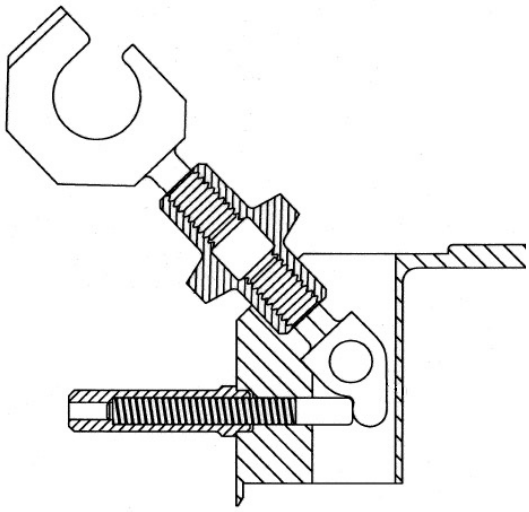

Figure 3. Latch Arm assembly, rotated

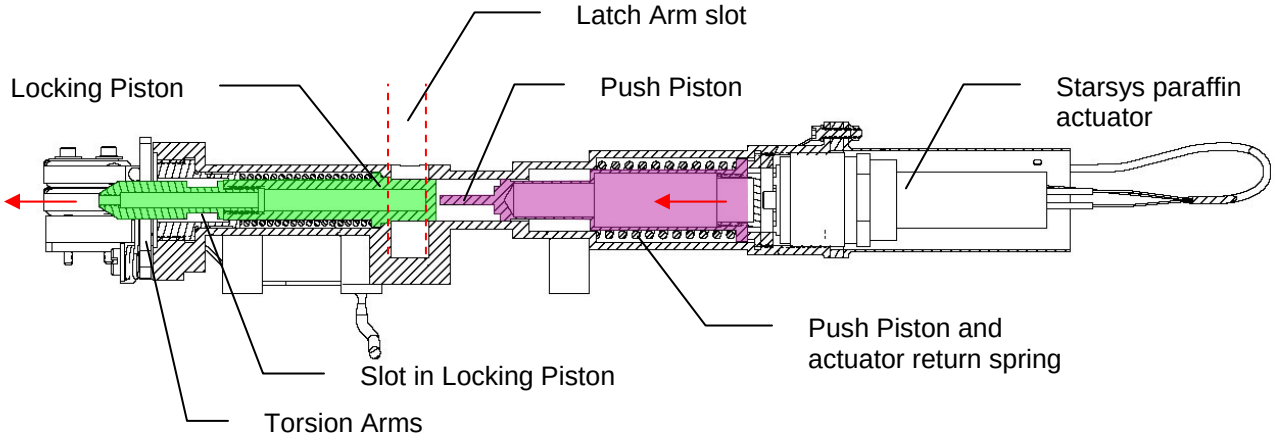

Figure 4. Latch mechanism cross section

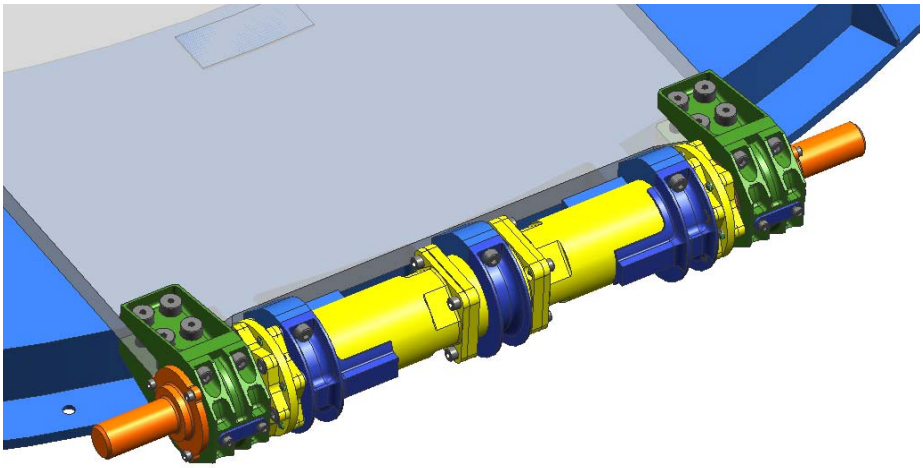

Figure 5. Hinge Mechanism

Hinge Mechanism

The Hinge mechanism works by means of two sets of nested compression springs acting against a lead screw / carrier nut combination. A clever and complex design, the Hinge is fully single fault tolerant. For some failure modes, such as the loss of a spring, the Hinge is two fault tolerant. A graphic of the Hinge mechanism is presented in Figure 5 and a cross section is shown in Figure 6.

In the cover closed position, the compressed springs react against the Hinge mid section and the spring support end, which are restrained from rotation by shoulder screws and rollers running in slots in the housing. Attached to the spring support end is the lead screw, which is also restrained from rotation. The lead screw passes though a carrier nut, which is constrained from translation, but allowed to rotate. As the lead screw translates, the carrier nut rotates. The cover is attached to the clevis, which in turn is fitted on roller bearings on the carrier nut. Pins fixed in the carrier nut and clevis engage during rotation, driving the cover open. Each side of the hinge mechanism works independently of the other. If one side jams, the Clevis rotates freely on the bearings. If a Clevis bearing freezes, the carrier nut and Clevis can rotate on the inner bearing.

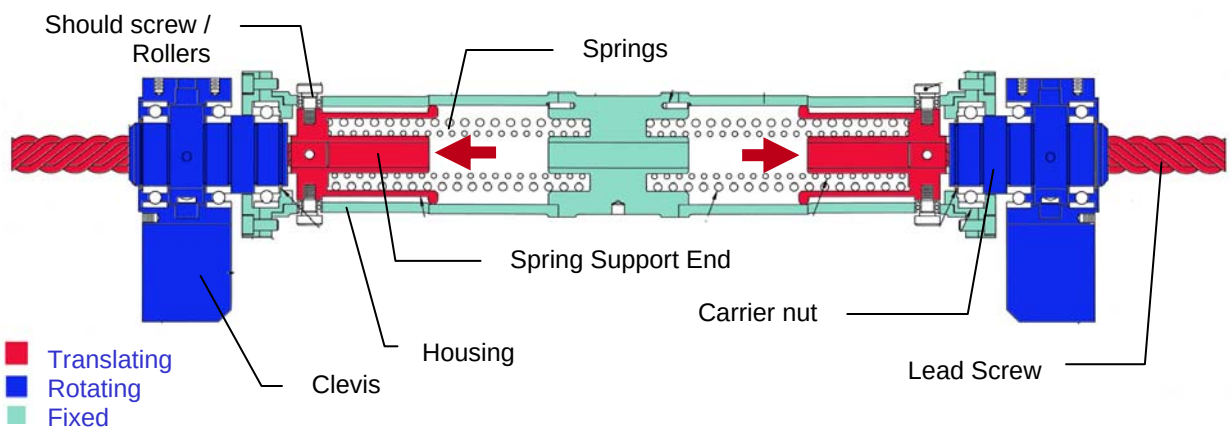

Figure 6. Hinge mechanism cross section

Energy Absorber Mechanism

The GALEX Energy Absorber used a compression spring in combination with a ratcheting plunger. Once the plunger was pushed in, the ratchet held the plunger and compressed spring fixed. Hall effect sensors imbedded in the striker and magnets mounted on the cover provided telemetry of a deployed cover. The cover magnets also served to latch the cover open. One disadvantage of the GALEX design was that after each cover deployment test, the Energy Absorber had to be disassembled to be reset. It was requested by the project to simplify the GALEX Energy Absorber design with replaceable, crushable honeycomb.

We desired to keep the new energy absorber function as similar as possible to the GALEX mechanism due to the support structure design, the compression spring and ratcheting device were replaced with crushable honeycomb core. The housing and Hall effect sensor striker were relatively unchanged. The honeycomb core is bonded to a simple disposable aluminum plate which is attached to the plunger. The push rod and Hall effect sensor striker are then attached to the plunger, creating the plunger subassembly. As the magnets mounted on the Cover impact the striker during a deployment, the core is crushed against the Energy Absorber End Cap. See Figure 7 for an exploded view of the crushable honeycomb Energy Absorber mechanism and Figure 8 for a graphic of the Plunger subassembly.

The Energy Absorber honeycomb core is replaced after each cover deployment. The Push Rod is segmented in two pieces with a left-hand thread so that the Hall effect sensor striker and front segment Push Rod can be removed from the plunger subassembly without stressing or twisting the leads. The mechanism is reset by first removing the striker and Front Cap and then the Plunger subassembly is removed from the housing and the core replaced.

During prototype cover deployment tests, several types of honeycomb were experimented with, for the goal of reducing cover bounce-back and obtaining the cleanest cover capture. Aluminum core, 3/8-5052-1.0, foil thickness 0.018 mm (0.0007 in) and crush strength of 172 KPa (25 psi), trimmed to three cells was found to work well, however the 50.8 mm (2 in) long samples available came close to bottoming out. New core, 88.9 mm (3.5 in) long, was selected to allow for enough travel with margin (see following paragraph for more detail). Deployment with this core proved to be the best and the cover bounce back was limited to approximately 0.04 rad (2.5 deg) (the cover does not rebound off the striker; instead the Plunger is pulled back to its limit stop). Because of the core's long length compared to its cross-sectional area, the core appears to initially buckle uniformly, then folds between the mid-section to base. Crush tests were conducted with the core and the force required to continue crushing gradually drops from the initial buckling. This result corresponded well for this application as the impact force falls off considerably after some energy is absorbed. See Figure 9 and Figure 10 for before and after cover deployment images of 50.8 mm (2 in) and 88.9 mm (3.5 in) core respectively.

The kinetic energy of the deployed cover and energy to be absorbed is equal to that of the Hinge mechanism compression spring's potential energy at the cover closed position. The average crush load multiplied by the crushed length gives the energy absorbed, and thus, with some extra length for margin, defined the length of required core.[1] Figure 11 is Hexcel's honeycomb crush strength curve, which illustrates the peak load, average crush load, and the energy absorbed. Core used in the Energy Absorbers were precrushed slightly to remove the peak force spike. Crush test data from the three cell, 88.9 mm (3.5 in) long core is presented in Figure 12.

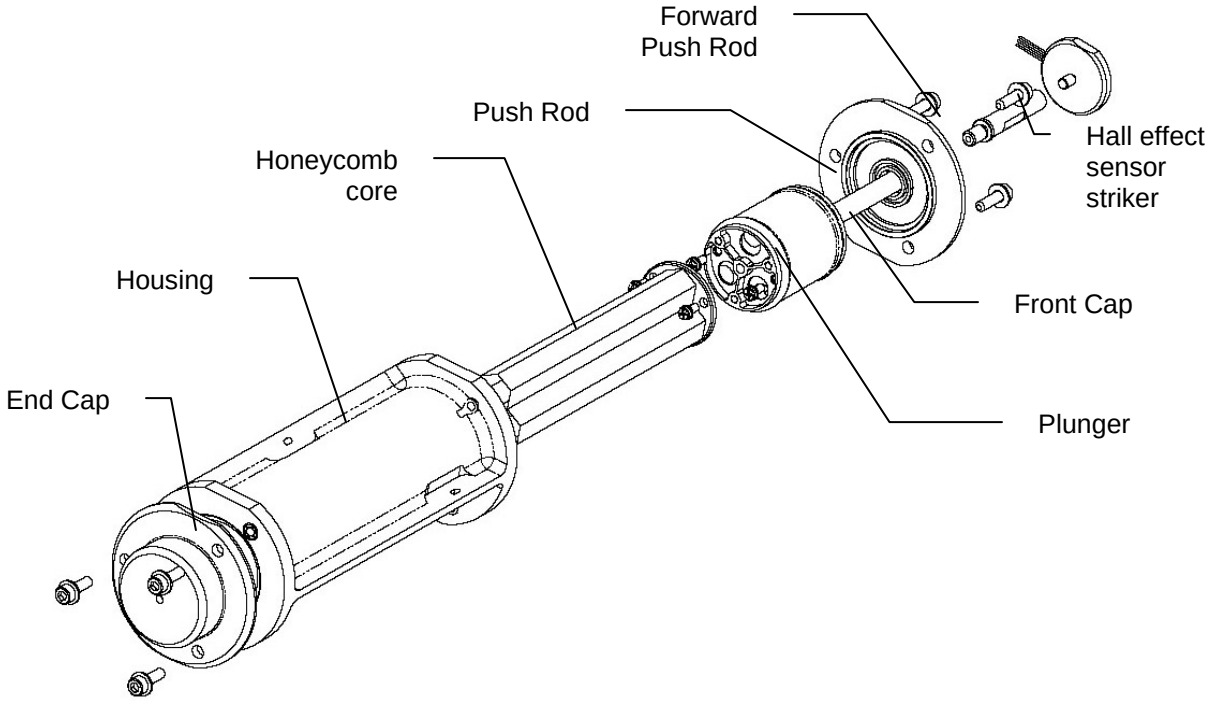

Figure 7. Energy Absorber exploded view

Figure 8. Energy Absorber Plunger subassembly; note core precrushed.

Figure 9. Three cell core, 50.8 mm (2 in) long

Figure 10. Three cell core, 88.9 mm (3.5 in) long

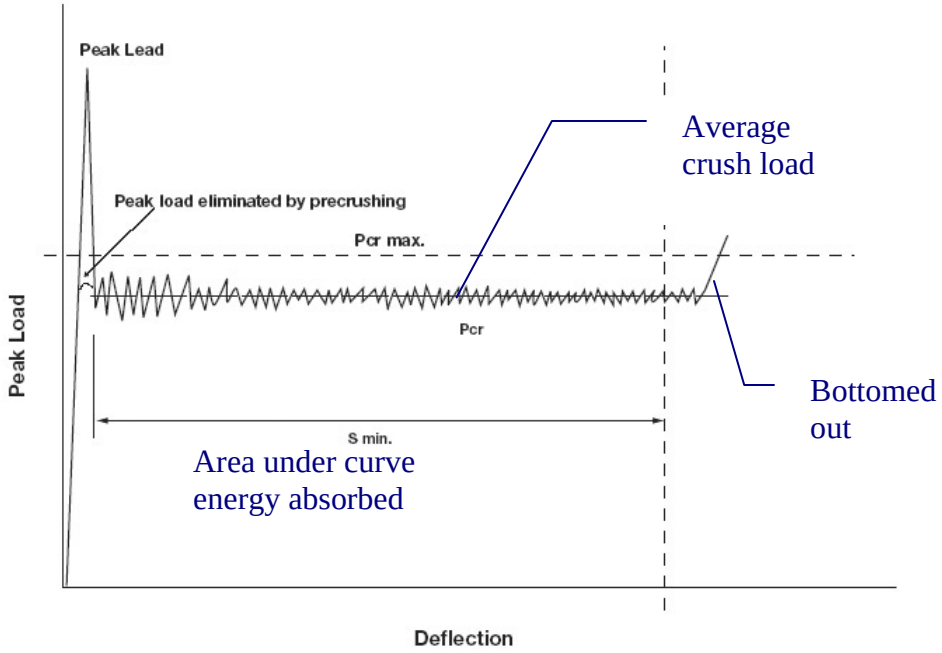

Figure 11. Hexcel Honeycomb crush strength curve[1]

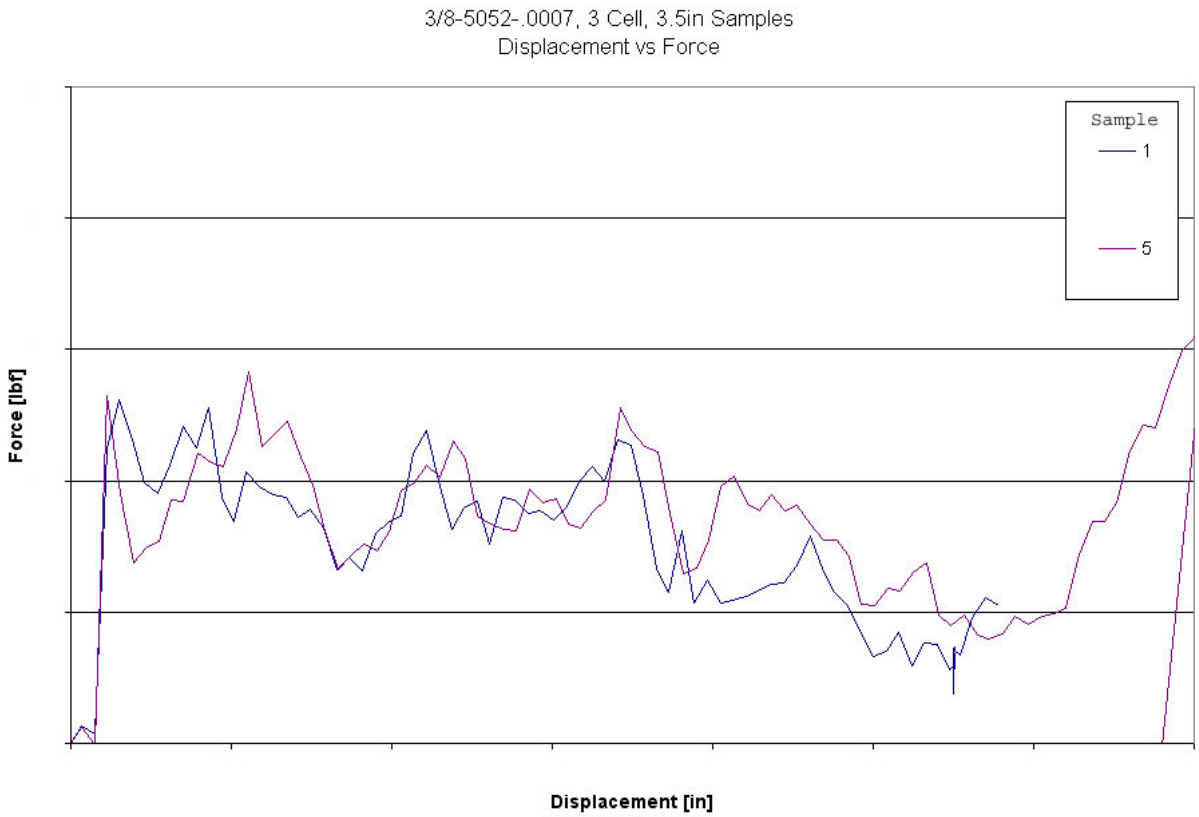

Figure 12. Force / Displacement graph for 3 cell, 88.9 mm (3.5 in) core

Heritage Adoption Lessons Learned

Sufficient review of a heritage design is necessary before adoption as heritage designs may impose unnecessary limitations, constraints, or failure modes on interacting mechanisms or systems. Additionally, a flight readiness review of a heritage design is necessary, as it can not be assumed that all necessary information regarding the design, such as as-built drawings, assembly instructions, test procedures and test data, are available. Of particular interest are the GALEX heritage adoption lessons learned during the AMT CDLM development.

GALEX cover deploy mechanism was obviously built to a redlined set of drawings; however, these drawings were not available during the AMT task. As GALEX was an aggressively “faster, better, cheaper” mission, it is thought that resources were not available to complete the drawing package. Much of any schedule savings in using the heritage design was exhausted going through more than 70 drawings to look for, and correct, interference, material, and lubrication issues. Some issues were found only after fabrication and assembly, necessitating the rework or re-fabrication of built parts. Accurate build and assembly histories are required to adopt heritage designs.

Very limited test data, such as cover deployment time and cover impact force, was available from GALEX. The lack of test data necessitated the building of a schedule intensive deployment test fixture and mockup cover and duplicating cover deployment tests. Fortunately, a spare Latch mechanism and an engineering model Hinge mechanism were available for testing. An image of the deployment fixture is shown in Figure 13.

Figure 13. Deployment Test Fixture

Early adoption of the Hinge mechanism restricted the design of the crushable honeycomb Energy Absorbers. Not until the deployment test fixture and prototype energy absorbers were built and tests run did it become apparent that the cover impact force was much lower than expected. If the honeycomb crush strength was too high, the cover would bounce off the Energy Absorbers as the impact force dropped off during impact. Conversely, the honeycomb had to be strong enough to resist the Plunger subassembly inertial loads during vibration. It was found during testing that the impact force necessary to sustain honeycomb crushing, and to effectively keep the cover from rebounding, required the Hinge torque output to be *increased* (by the use of larger springs). By increasing the un-dampened Hinge torque output, the amount of kinetic energy to absorb was also increased. This was further complicated by adopting the same GALEX composite cover thickness, even though the cover grew substantially in size.

An alternative design, with a stiffer cover, could have placed the crushable honeycomb on brackets close to the hinge axis where the impact forces would be higher, allowing for a more stable and compact honeycomb design and reducing the torque output and energy absorption. The overall design would have been much simpler, reducing drawing, fabrication, and installation costs and schedule with the removal of the Energy Absorber structure and simplification of the Hinge mechanism.

GALEX placed the Latch mechanism on top of the cover due to mounting surface constraints and contamination control. However, the AMT configuration could have allowed the Latch mechanism to be mounted to the Cover Ring instead of on the cover. This would have removed the necessity of routing Latch cabling over the Hinge, eliminating cable parasitic torque drag. Additionally, the simplified cabling could have received cable stiffening micrometeorite shielding. With the Latch mechanism mass removed from the cover, the crushable honeycomb could have been placed close to the hinge axis instead of along the canister.

Cover deployment depended on Latch Arm rotation. The GALEX latch arm was positioned close to the instrument aperture opening and was rotated away from the aperture to reduce stray light issues. The rotation of the latch arm rotate introduced some potential single point failures. After the GALEX latch arm was adopted, it was discovered than an earlier mission that originally designed the Latch mechanism instead utilized a fixed latch arm with a slot in the path of cover deployment. Because the AMT design did not face the same stray light issues as GALEX, a potential failure mode was unnecessarily adopted and additional work was necessary to reduce risk.

The Latch mechanism is zero fault tolerant in some cases as it depends on a single actuator (with redundant heaters) and a single set of pistons to translate prior to cover deployment. An alternate latch mechanism design using two Starsys pin pullers in a toggle type configuration could have been more desirable and would have been fully single fault tolerant. Additionally, the mechanism would have been less complex and would possibly have fewer parts and less expensive to fabricate.

Both the Latch and Hinge mechanisms were complex, with many tightly toleranced parts. These mechanisms were expensive and schedule intensive to fabricate. Simpler alternate designs described above would have potentially saved more schedule than building the heritage designs.

The Hinge mechanism is only capable of cover deployment with the Hinge axis aligned with gravity (vertically). It would have been preferable to incorporate a hinge mechanism that was capable of deploying the cover in any orientation as the AMT instrument will not be positioned vertically during I&T and ATLO, making an end-to-end test impossible. Instead, cover deployment tests will be conducted before CDLM delivery to I&T. Once in I&T and ATLO, first motion tests will verify Latch mechanism functionality and the cover will be sweep to ensure there are no obstructions.

The Energy Absorber honeycomb was finalized before flight-like cable was installed over the Hinge axis during prototype cover deployment tests. It was expected that the cable could be wrapped in a way to provide a positive torque to aid the cover rotation, but was found not to be possible. Further prototype deployment tests with the cable showed that the honeycomb needed to be changed.

The crushable honeycomb Energy Absorber prototype effort cost significant schedule. In keeping the Energy Absorber housing similar to GALEX (and thus limiting the redesign of the support structure), the Energy Absorber still must be disassembled to be reset after a cover deployment test. This disassembly is only moderately less time consuming than a GALEX Energy Absorber reset.

While the residual end-of-travel Hinge torque output and magnetic latch provide enough force to keep the cover captured during spacecraft maneuvers, a positive latch mechanism would have been more preferable.

Conclusion

Heritage designs offer projects an attractive means of reducing cost and schedule. However, without a through review and investigation of the state of readiness, a heritage design may impose unnecessary limitations and restrictions, in addition to cost and schedule impacts. It is recommended that trade studies be completed of designs similar in function to that of the proposed heritage design prior to adoption. Only then, potential shortcomings of the heritage design may become apparent.

Before adopting a heritage design:

- Perform trade studies of designs similar in function to that of the heritage hardware. Look for best solution.
- Thoroughly review heritage drawing package for completeness
- Verify the heritage design will meet project requirements
- Review heritage test data and test plans and verify they meet current projects requirements. If they do not, study impact and feasibility of revised testing.
- Review heritage design for failure modes
- Perform all prototype testing with as flight-like hardware configurations as possible

Acknowledgements

The research described in this paper was performed by the Jet Propulsion Laboratory, California Institute of Technology, under contract with the National Aeronautics and Space Administration.

The author gratefully acknowledges the contributions of JPL team members: Mark Balzer, Kevin Burke, Keith English, Ted Iskenderian, Mike Johnson, Ellyn McCoy, Doug Packard, Don Sevilla, and Brad Swenson,

References

1. “HexWeb Honeycomb Energy Absorption Systems, Design Data”, Hexcel Corporation, March 2005.