Convert Ten Foot Environmental Test Chamber Into An Ion Engine Test Chamber

Paul Van Velzer
Jet Propulsion Laboratory

ABSTRACT

The 10 Foot Space Simulator at the Jet Propulsion Laboratory has been used for the last 40 years to test numerous spacecraft, including the Ranger series, several Mariner class, among many others and finally, the Spirit and Opportunity Mars Rovers.

The request was made to convert this facility to an Ion Engine test facility, with a possible long term life test. The Ion engine was to propel the Prometheus spacecraft to Jupiter's moons. This paper discusses the challenges that were met, both from a procedural and physical standpoint. The converted facility must operate unattended, support a 30 Kw Ion Engine, operate economically, and be easily converted back to former operation as a spacecraft test facility.

KEYWORDS: Spacecraft, Ion Engine, Life Testing, Space Simulation

INTRODUCTION

The Ten Foot Space simulator has been instrumental in the testing of numerous spacecraft from, the first Rangers to the Mars Exploration Rovers.
About 1985 the diffusion pumps were replaced with cryo-pumps and a turbo-molecular pump.
About 1990 the high bays were converted to meet class 10,000 cleanroom standards.

The Prometheus (JIMO) mission is part of an ambitious mission to orbit and explore three planet-sized moons, Callisto, Ganymede and Europa, of Jupiter. The moons may have vast oceans beneath their icy surfaces. Eight 20 Kw Xenon Ion Engines would be required to propel the flight system to the Jupiter system.A nuclear reactor would provide power to the mission, which would launch in the next decade.
JPL and Glenn Research would develop and test a prototype engine.

Preliminary Investigation
Identify all tasks quickly.
Outline all costs.
The project had specified that startup costs could be significant, but operating costs had to be minimal. It was generally felt than ***not*** everyone on the team had considered just how large the scope of work that lay ahead. In an effort to communicate my concern I met with each individual on the team and discussed their specific job, before committing to them to their significant tasks.

1. Lifting Hoist
2. Work Platform & Engine Test Stand
3. Upper Personnel Door
4. Cryopump Installation
5. Liquid Nitrogen Supply
6. Graphite Shroud
7. Water Cooling

Lifting Hoist

A hoist would be needed for almost every aspect of the project including mounting test engines on the engine stand. It would have to handle about one ton, and be able to be removed easily from the chamber before pump-down. The hoist rail/support would be an aluminum I beam suspended from hard points formerly used for supporting the 10' collimating mirror. The hoist and the work platform would have to be constructed, and installed quickly in order to support the installation of the Upper Personnel Door.
The hoist would be a commercially available two speed electric trolley mounted chain hoist with 50 feet of chain and a 40' pendant cable The routine installation and removal could be done by two technicians.
Design to completion two months.

Work Platform

Work platform needed to be assembled with parts or as an assembly that could be easily be hoisted to the top of a 40' scaffold & chamber. Quickly assembled (modular & bolted together)Pieces precisely fit together. Utilization of existing hard-points in the chamber. OSHA approved kick plates & hand rails.

Upper Personnel Door

Fabricate and install a personnel door at the roof level of the chamber in four months from design to completion and proof test.
Located out in the weather and so Stainless Steel was the material of choice.
Location crossed a structural support rib for the vessel.
Devise a method to proof test and measure deflection**.**

New Cryo-pumps

It was determined that for the flowrate of Xenon that would be normal to a 20Kw Ion engine we would need six CVI TM 1200 Nude Pumps each rated at 57,000 L/sec of nitrogen.

New LN2 Supply

The existing LN2 supply is inefficient, (>100 GPH). The existing LN2 tank next to bldg. can be tapped into, need flowmeter to account for usage. The cost would be ~$40K. The entire system could be installed by facility technicians in ~1 week.

Carbon Panels

The high energy plasma emitted from the ion engine would quickly strip metal from the chamber's stainless steel shrouds, so a liner of high purity elemental carbon is necessary to cover all surfaces. The panels were baked out at 1000 C @10-5 Torr to insure cleanliness. One half inch thick panels were bolted to the welded Uni-strut support structure. A tight fit on the panels of less than .020" is necessary to seal in plasma and prevent damage to chamber and structure. Graph-foil used to fill small voids. Graphite tape used to cover bolt heads.

Water Cooling

The conversion of the Ln2 shroud system, to water cooling was required in order to economically remove heat from carbon panels. The installed system must be obvious and clearly labeled. All circuits must be independently controlled. The system must include pressure and temperature local gauges, and a flow switch to alarm at console.
Shutoff and drain quickly executed, in case of power failure.

Major Glitches

1. Arcing due to plasma contamination.
    - A short in the 10kv supply at the feed through was corrected by masking with fine screen material.
2. Leaks in the floor shroud now being used for cooling the plasma.
    - Floor shroud removed and a water cooled chevron "Beam Dump" used in its place.
3. Window coating due to vaporization.
    - Camera installed with turning mirror instead of window viewing.

Glitches (cont.)

4. Graphite Masking not 100%
    - Erosion noticed on some shrouds Graph-foil installed as needed
5. Graphite not baked out (initially)
    - Panels removed for bake out 1000C @ 10-5 torr
6. Cryopump placement
    - Thrust caused xenon pressures ten times greater at the bottom of the chamber from the top, making Cryopump placement at the bottom of the chamber more effective.

Anomalies

1. During testing a small amount of "city water" was used to supplement the cooling water system.
2. It was thought that the calcium in the water would not be an issue in this quantity. However within two months the floor shroud started to leak.
3. These shrouds were the original stainless steel cryogenic shrouds used trouble free for over 40 years. Now suddenly showing over 20 leaks, all from welded joints.
4. The floor shroud was removed for later evaluation and repair.
5. The lower shroud experienced <u>no</u> problem with the same water.

Put It All Back

1. Graphite panel & cage removal.
2. Platform removal and storage for future servicing of cryo-pumps.
3. Ceiling shroud reinstalled for testing flight hardware.
4. Cleanup Graphite dust
    - Pressure wash the inside of chamber with Simple Green (1oz. Per Gal solution).
    - Hand scrub every internal surface of the chamber and shroud to remove vaporization particulates.
    - Collection of waste water and disposal.
5. Return shrouds to Ln2 operation.

Conclusions

1. The facility modifications were completed on time and within budget.
2. The Nexus thruster was successfully tested at 16~20Kw for a duration of 2000 hours.
3. Xenon gas was never recovered for resale back to vendor (cost of recovery system would have been a wash).
4. Hand cleaning a 40' x 13'Ø chamber not something you want to do personally.

5. The water problem was investigated and found that while the amount of calcium in the city water was not a problem it was free ions of chlorine.
6. The welds were of a grade of stainless significantly different than the parent material. The resulting galvanic action, when exposed to chlorine ions, caused such erosion of material that numerous leaks resulted.

Biography

Paul Van Velzer currently works for the Jet Propulsion Laboratory, and oversees operations and maintenance of the Twenty-Five foot Space Simulator. He has worked in the environmental test lab group for twenty-five years. He has been a team member in the testing of many spacecraft including Galileo, Cassini, Pathfinder, Iras, and the Mars Exploration Rovers.

References:

Performance and Wear Test Results for a 20 kW-Class Ion Engine with Carbon-Carbon Grids
James E. Polk, Dan. M. Goebel, John Steven Snyder, Analyn C. Schneider,
Lee K. Johnson and Anita Sengupta
Jet Propulsion Laboratory, M/S 125-109, 4800 Oak Grove Drive, Pasadena, CA 91109
(818) 354-9275, james.e.polk@jpl.nasa.gov
AIAA 2005-4393

The work described in this paper was carried out at the Jet Propulsion Laboratory for the California Institute of Technology, under a contract with the National Aeronautics and Space Administration.

AEROSPACE TESTING SEMINAR

JPL

Convert Ten Foot Environmental Test Chamber Into Ion Engine Test Chamber

Paul Van Velzer

Jet Propulsion Laboratory

Convert Ten Foot Environmental Test Chamber Into Ion Engine Test Chamber

- The Ten Foot Space simulator has been instrumental in the testing of numerous spacecraft from, the first Rangers to the Mars Exploration Rovers.
- About 1985 the diffusion pumps were replaced with cryo-pumps and a turbo-molecular pump.
- About 1990 the high bays were converted to meet class 10,000 cleanroom standards.

Mission Overview

- The Prometheus (JIMO) mission is part of an ambitious mission to orbit and explore three planet-sized moons, Callisto, Ganymede and Europa, of Jupiter. The moons may have vast oceans beneath their icy surfaces.
- Eight 20 Kw Xenon Ion Engines would be required to propel the flight system to the Jupiter system.
- A nuclear reactor would provide power to the mission, which would launch in the next decade.
- JPL and Glenn Research would develop and test a prototype engine.

Chamber End bell with MER

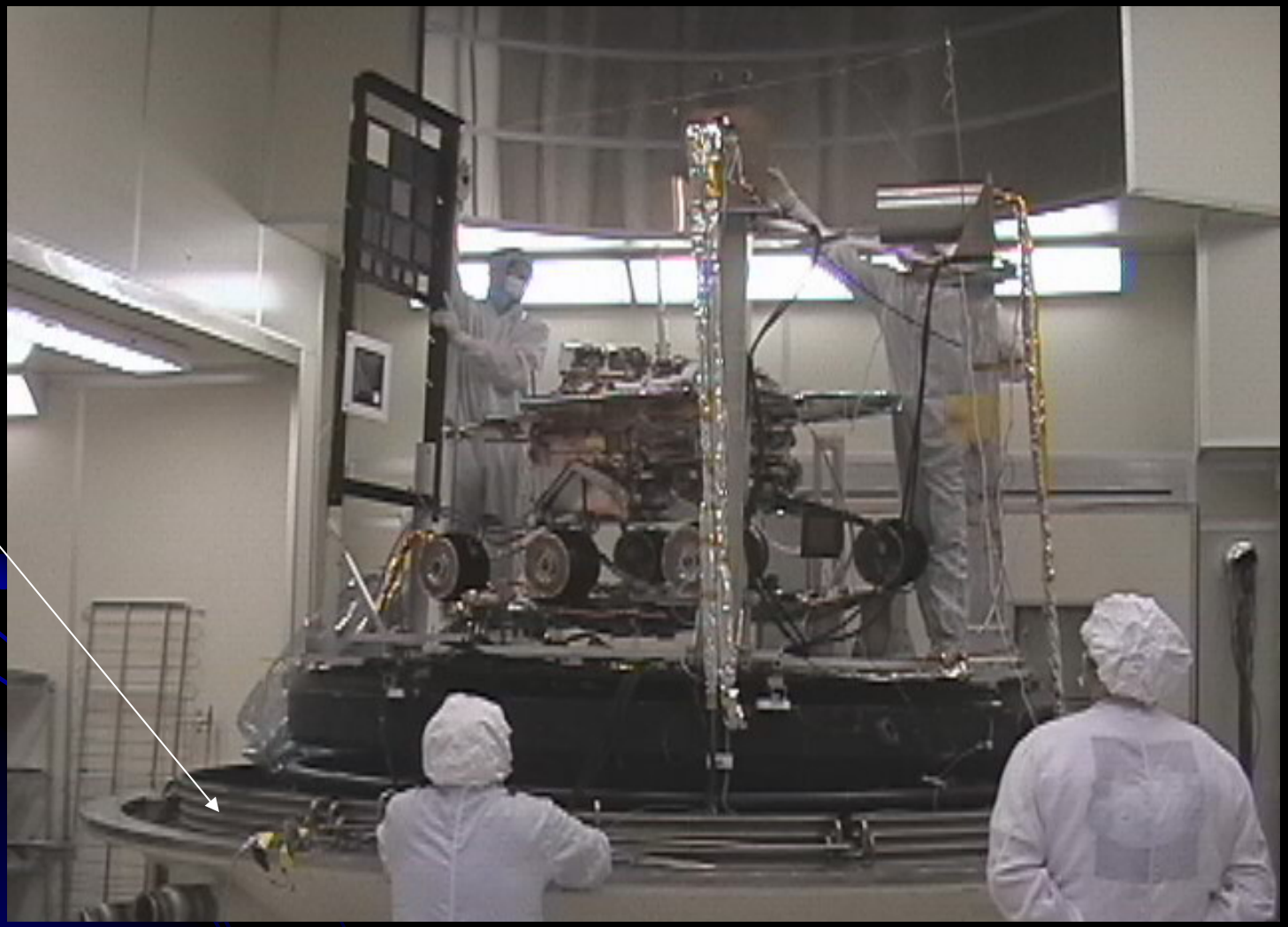

Floor Shroud used for cooling

Convert Ten Foot Environmental Test Chamber Into Ion Engine Test Chamber In Twelve Months

- Identify all tasks quickly.
- Outline all costs
  - The project had specified that startup costs could be significant, but operating costs had to be minimal.
  - It was generally felt than ***not*** everyone on the team had considered just how large the scope of work that lay ahead.
  - In an effort to communicate my concern I met with each individual on the team and discussed their specific job, before committing to them to their significant tasks.

The Seven Major Challenges

- 1. Lifting Hoist
- 2. Work Platform & Engine Test Stand
- 3. Upper Personnel Door
- 4. Cryopump Installation
- 5. Liquid Nitrogen Supply
- 6. Graphite Shroud
- 7. Water Cooling

Hoisting System

- A hoist would be needed for almost every aspect of the project including mounting test engines on the engine stand.
- It would have to handle about one ton, and be able to be removed easily from the chamber before pump-down.
- The hoist rail/support would be an aluminum I beam suspended from hard points formerly used for supporting the 10’ collimating mirror.

Hoisting System (continued)

- The hoist and the work platform would have to be constructed, and installed quickly in order to support the installation of the Upper Personnel Door.
- The hoist would be a commercially available two speed electric trolley mounted chain hoist with 50 feet of chain and a 40’ pendant cable
- The routine installation and removal could be done by two technicians
- Design to completion two months.

Work Platform

- Work platform needed to be assembled with parts or as an assembly that could be easily be hoisted to the top of a 40' scaffold & chamber.
- Quickly assembled (modular & bolted together)
- Pieces precisely fit together.
- Utilization of existing hard-points in the chamber.
- OSHA approved kick plates & hand rails

Existing Hard Points

Chamber Layout

Work Platforms

Hard Points

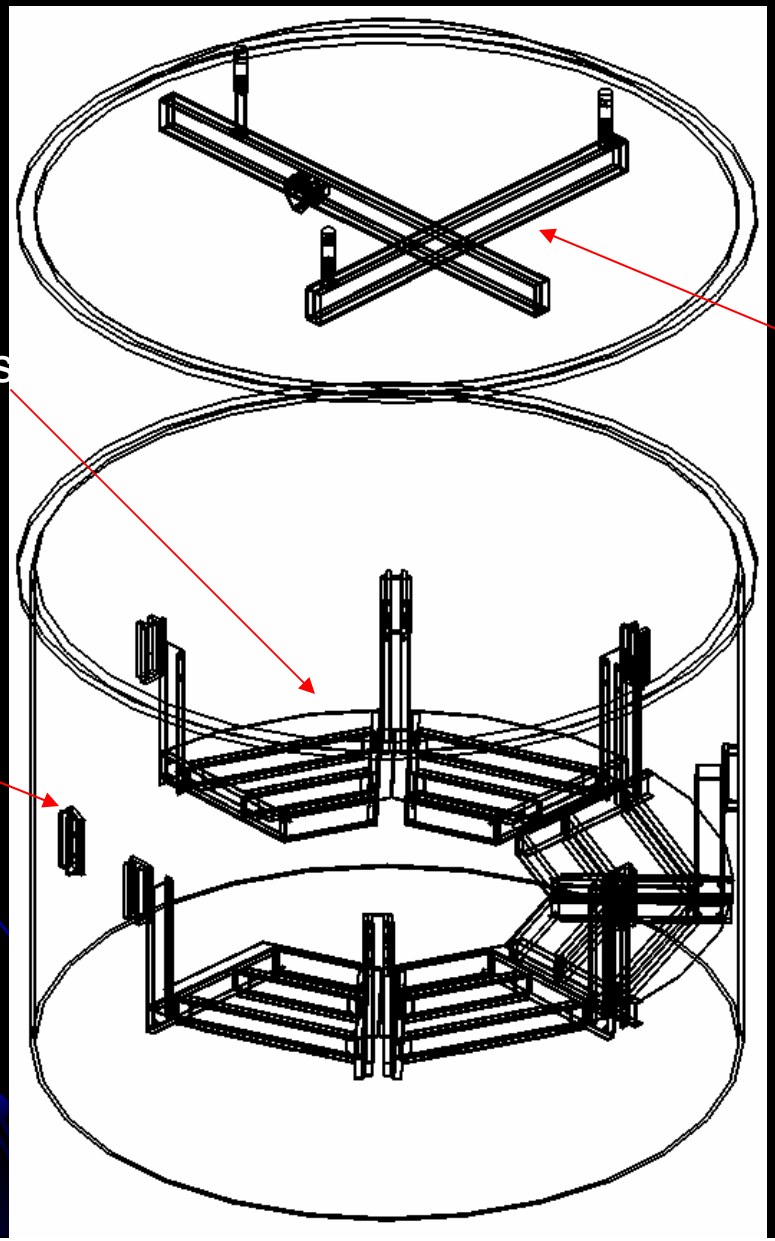

Hoist Support

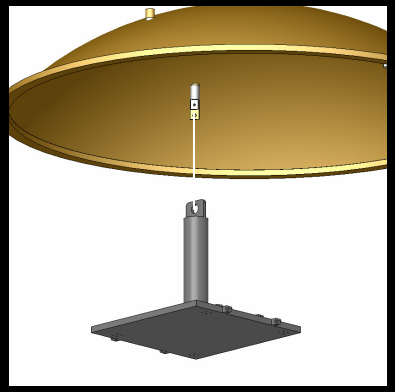

Proof load each of three mirror mounts existing in chamber dome.

Upper Personnel Door

- Fabricate and install a personnel door at the roof level of the chamber in four months from design to completion and proof test.
- Located out in the weather and so Stainless Steel was the material of choice.
- Location crossed a structural support rib for the vessel.
- How to proof test and measure deflection.

Upper Personnel Door

Before

After

New Cryo-pumps

- CVI TM 1200 Nude Pump
- 57,000 L/sec N2
- 6 pumps added to keep up with Xenon feed into engine

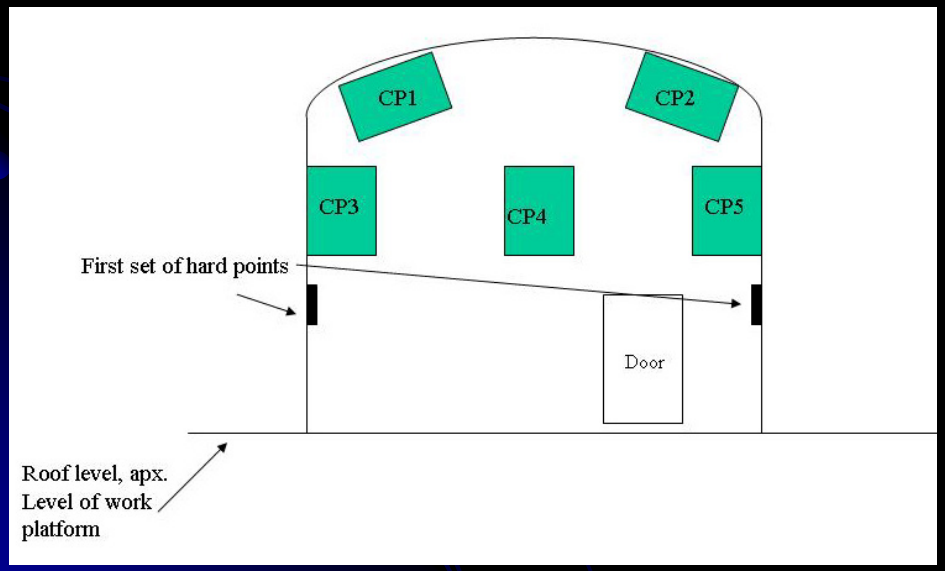

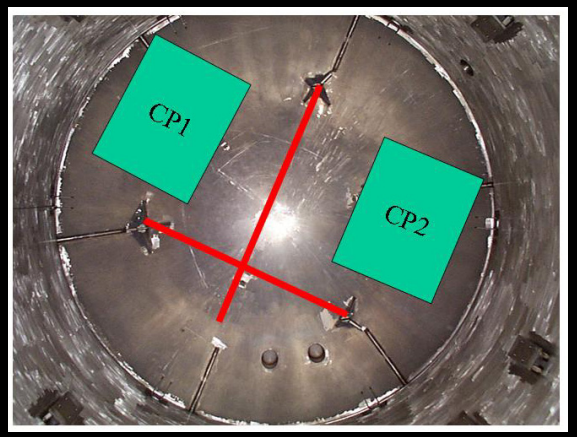

CVI TM 1200 Cryopump

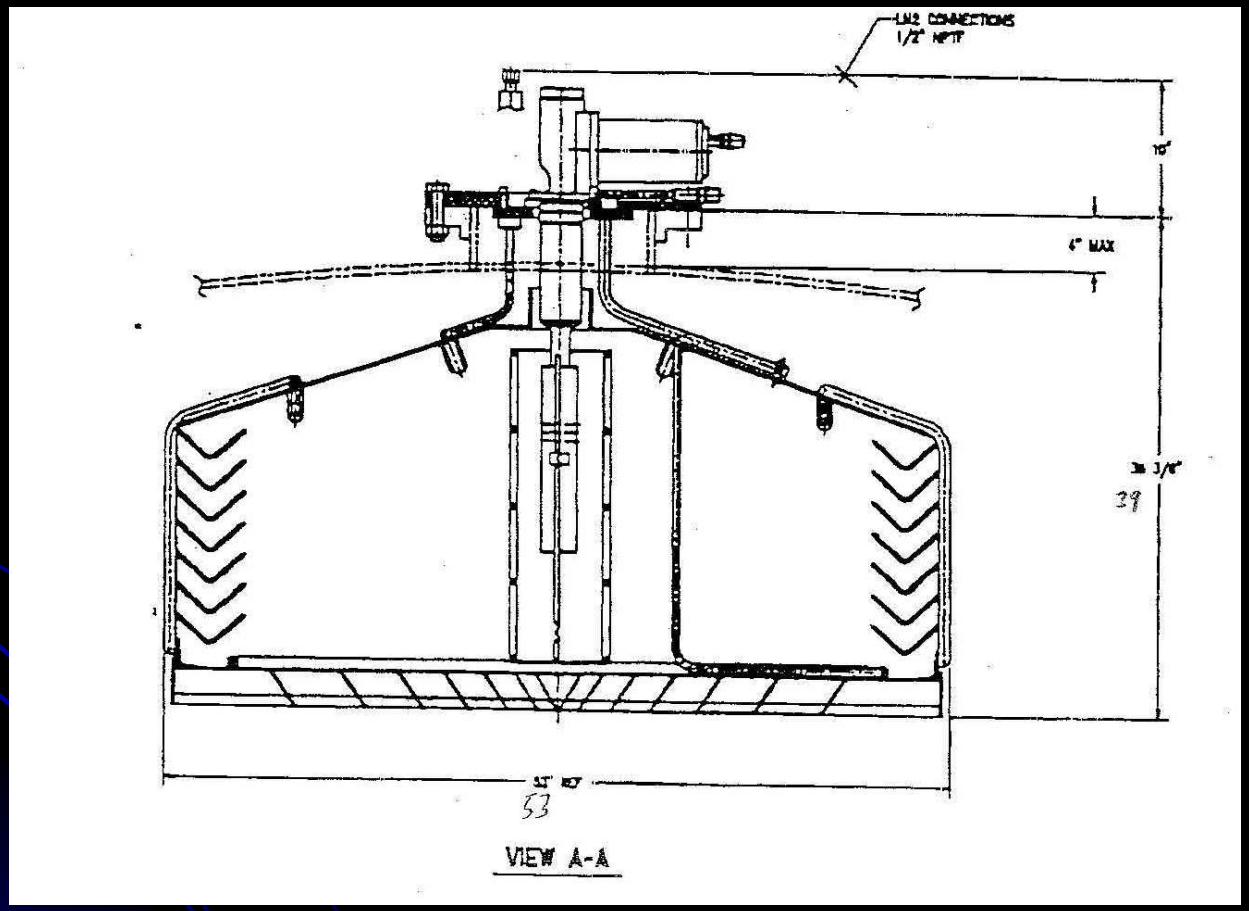

New LN2 Supply

- Existing LN2 supply insufficient, (>100 GPH)
- Existing LN2 tank next to bldg. can be tapped into, need flowmeter to account for usage.
- Cost ~$40K
- Installed by facility technicians in ~1 week

New LN2 Supply

Carbon Panels

The high energy plasma emitted from the ion engine would quickly strip metal from the chamber's stainless steel shrouds, so a liner of high purity elemental carbon is necessary to cover all surfaces.

- Baked out at 1000 C @10-5 Torr to insure cleanliness
- 1/2 " thick panels were bolted to the welded Uni-strut support structure
- Tight fit on the panels of less than .020" to seal in plasma and prevent damage to chamber and structure.
- Graph-foil used to fill small voids
- Graphite tape to cover bolt heads

Carbon Panels Installed

Graphite Panel Support Structure

Welded Uni-Strut frame with 2” box tube vertical supports and supported from existing hard points located on the chamber wall.

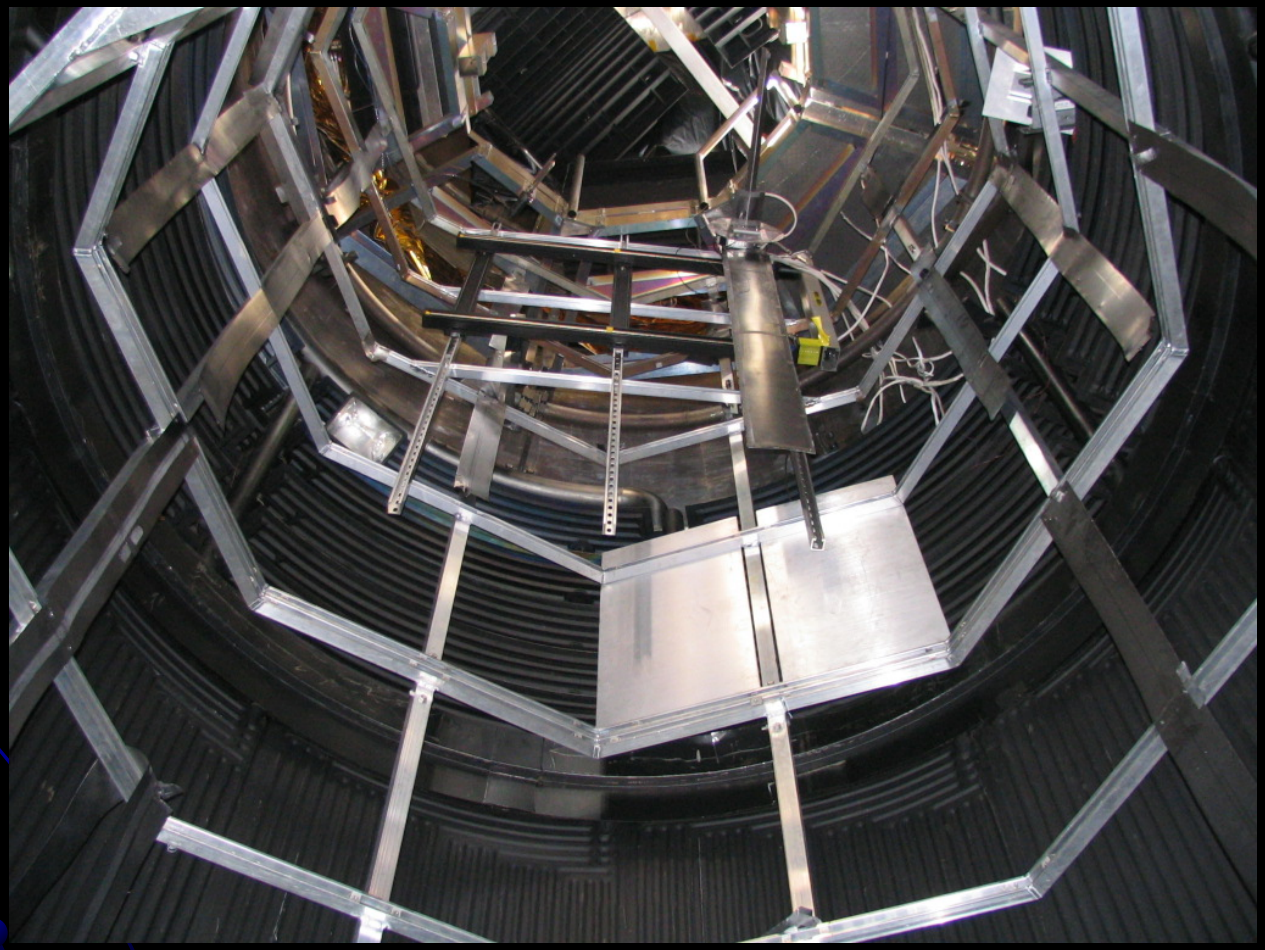

Carbon Panels Installed

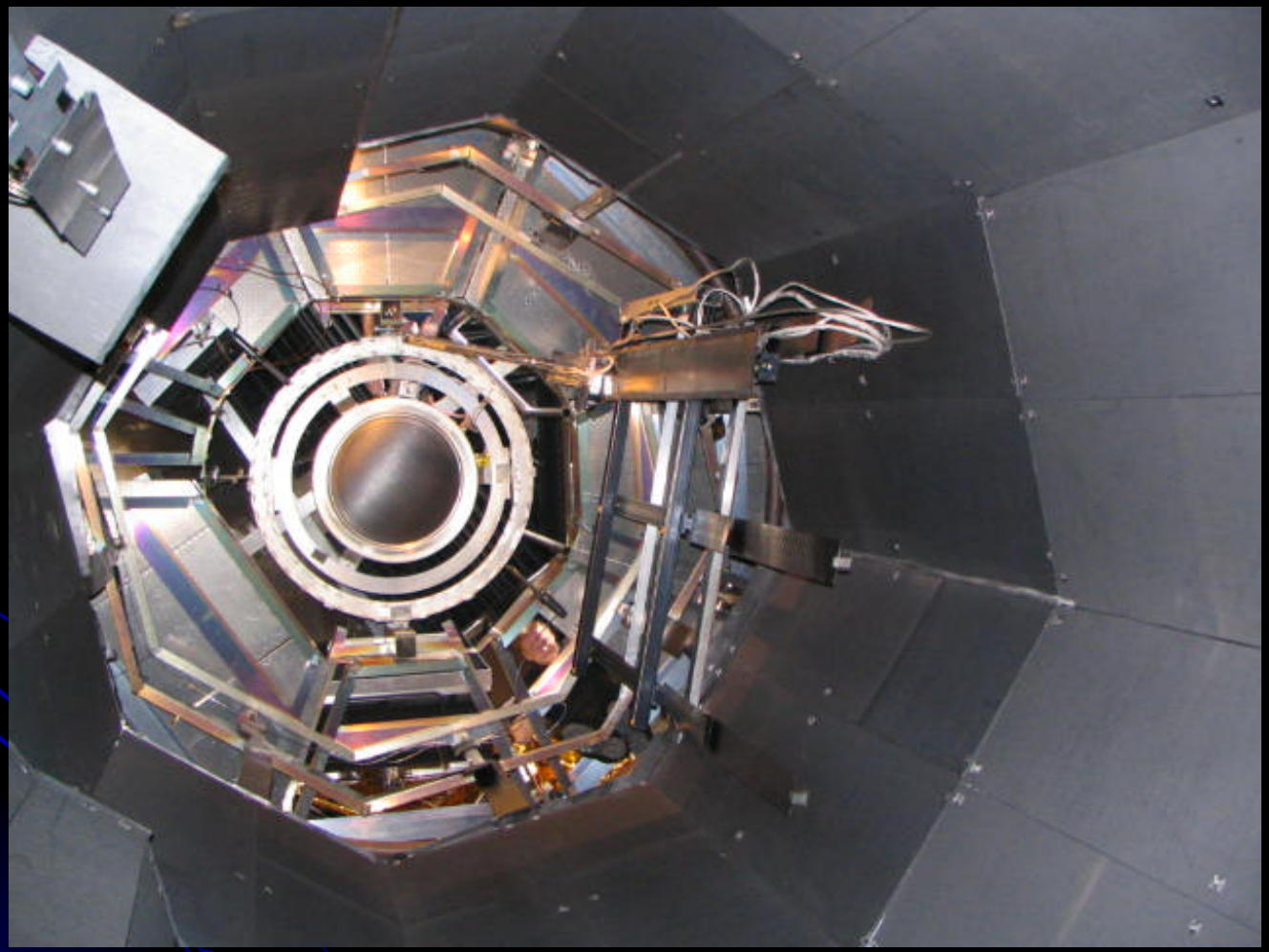

Water Cooling

- Conversion of Ln2 shroud system, to water cooling in order to economically remove heat from carbon panels.
- Installed system must be obvious
- Clearly labeled
- Independently Controlled Circuits
- Pressure and temperature local gauges
- Flow switch to alarm at console
- Shutoff and drain quickly executed

Major Glitches

- Arcing due to plasma contamination
  - A short in the 10kv supply at the feedthrough was corrected by masking with fine screen material.
- Leaks in the floor shroud now being used for cooling the plasma
  - Floor shroud removed and a water cooled chevron “Beam Dump” used in its place.
- Window coating due to vaporization
  - Camera installed with turning mirror instead of window viewing

Glitches (cont.)

- Graphite Masking not 100%
  - Erosion noticed on some shrouds Graph-foil installed as needed
- Graphite not baked out (initially)
  - Panels removed for bakeout 1000C @ 10-5 torr
- Cryopump placement
  - Thrust caused xenon pressures ten times greater at the bottom of the chamber from the top, making cryopump placement at the bottom of the chamber more effective.

Ceiling Shroud

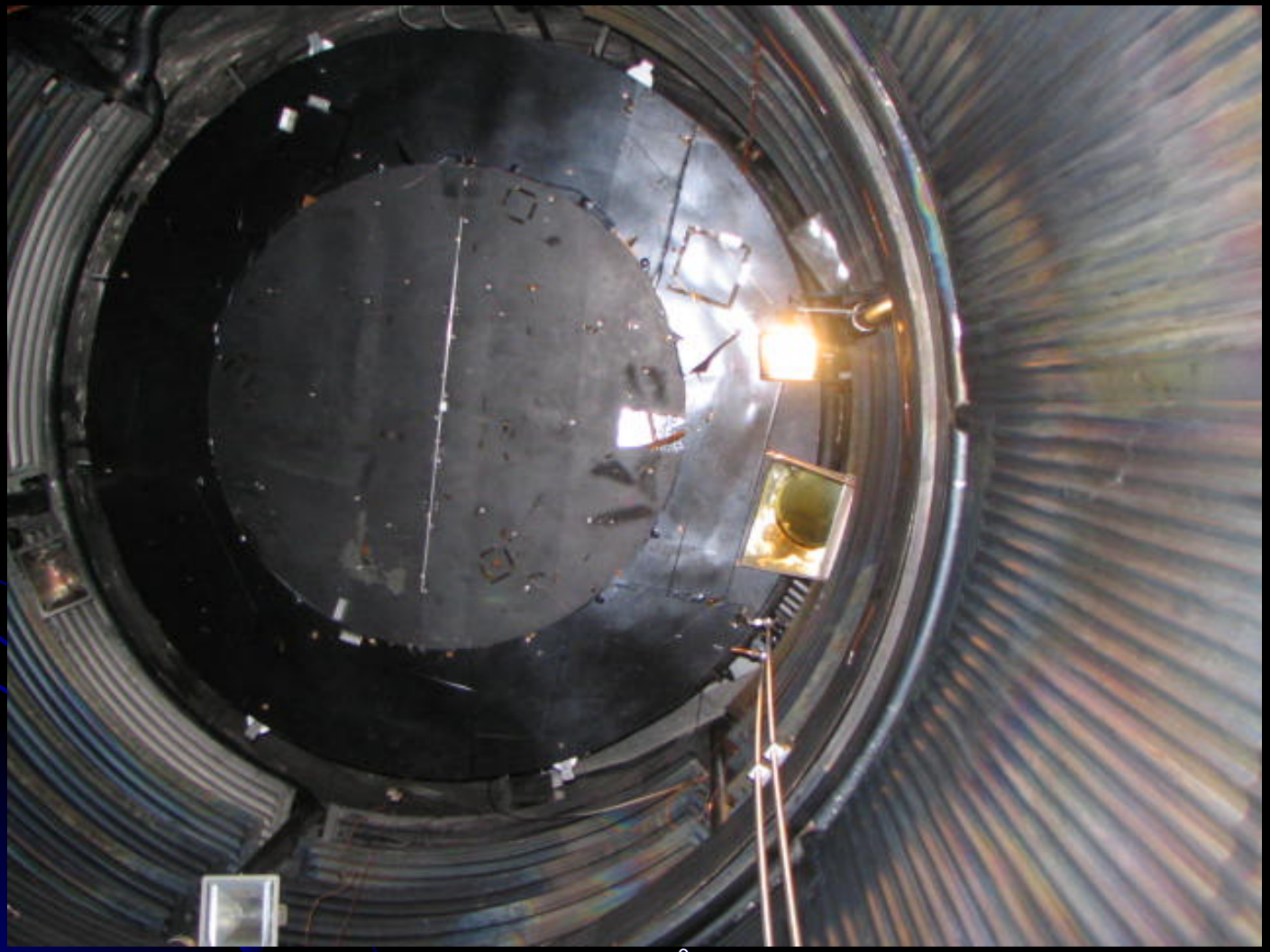

Final Layout

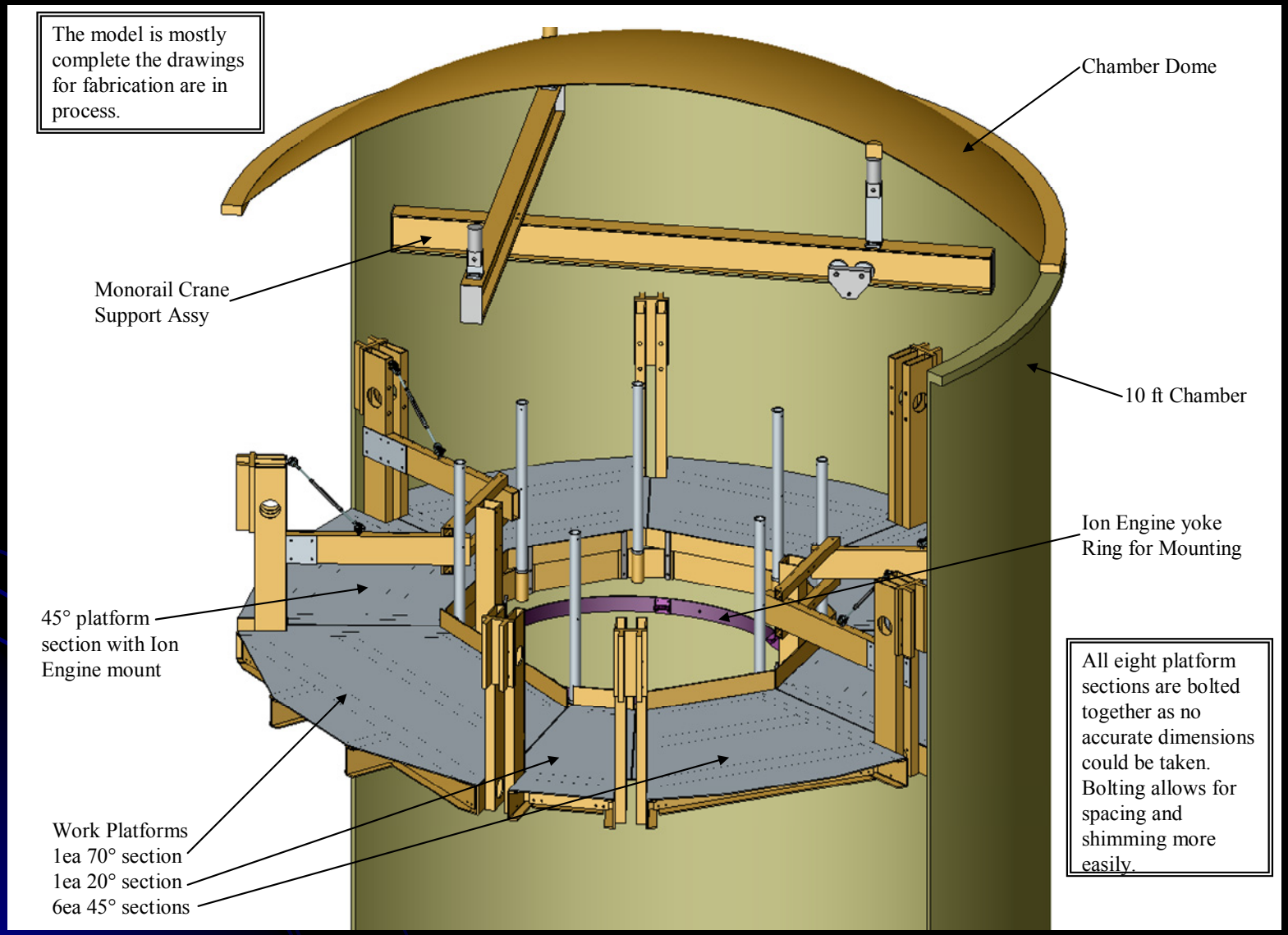

Anomalies

- During testing a small amount of “city water” was used to supplement the cooling water system.
- It was thought that the calcium in the water would not be an issue in this quantity. However within two months the floor shroud started to leak.
- These shrouds were the original stainless steel cryogenic shrouds used trouble free for over 40 years. Now suddenly showing over 20 leaks, all from welded joints.
- The floor shroud was removed for later evaluation and repair.
- The lower shroud experienced no problem with the same water.

Put It All Back

- Graphite panel & cage removal
- Platform removal and storage for future servicing of cryo-pumps
- Ceiling shroud reinstalled for testing flight hardware
- Cleanup Graphite dust
  - Pressure wash the inside of chamber with Simple Green (1oz. Per Gal solution)
  - Hand scrub every internal surface of the chamber and shroud to remove vaporization particulates.
  - Collection of waste water and disposal
- Return shrouds to Ln2 operation

Phoenix Solar Panel Testing 8-06

Conclusions

- The facility modifications were completed on time and within budget.
- The Nexus thruster was successfully tested at 16~20Kw for a duration of 2000 hours.
- Xenon gas was never recovered for resale back to vendor (cost of recovery system would have been a wash)
- Hand cleaning a 40’ x 13’Ø chamber not something you want to do personally
- The water problem was investigated and found that while the amount of calcium in the city water was not a problem it was free ions of chlorine.
- The welds were of a grade of stainless significantly different than the parent material. The resulting galvanic action, when exposed to chlorine ions, caused such erosion of material that numerous leaks resulted.