Exploring Europa with an RPS-Powered Orbiter Spacecraft

Robert D. Abelson, Thomas R. Spilker, James H. Shirley,
Jacklyn R. Green, and William D. Smythe
Jet Propulsion Laboratory, California Institute of Technology
4800 Oak Grove Drive, Mail Stop 301-445W
Pasadena, CA 91109-8099
(818)-393-1500, Robert.D.Abelson@jpl.nasa.gov

Abstract—The National Research Council's Solar System Exploration Decadal Survey identified Jupiter's moon Europa as its highest-priority destination for near-term exploration. Voyager and Galileo missions to the Jupiter system provided evidence consistent with a subsurface ocean on Europa, which is of great interest as a potential abode for extraterrestrial life. This paper describes a conceptual flagship-class Europa orbiter concept that was assumed to launch as early as 2012, arriving at Europa approximately 8 years later using inner solar system gravity assists to reach Jupiter. Jupiter's intense radiation environment limits the mission duration at Europa to 30 days for this study, though the duration is a result of multiple trades and is by no means fixed. The Europa Subgroup of the Outer Planets Assessment Group identified six primary science objectives for this concept. An ~150-kg instrument suite selected for the study addresses those objectives. Large heliocentric distances, high power levels required, and especially the harsh Jovian radiation environment drove the selection of radioisotope thermoelectric generators (RTGs) for all onboard electrical power, with the excess heat aiding spacecraft thermal control. Mass and architecture trades were performed using different spacecraft trajectories, launch vehicle types, radioisotope power systems, and mission durations. The study shows that new mission constraints allow a scientifically compelling Europa orbiter mission that might also deliver a Europa lander.

INTRODUCTION

With the redirection of Project Prometheus priorities away from the Jupiter Icy Moons Orbiter (JIMO) mission, NASA requested an initial study of a conceptual Europa orbiter mission that would use conventional chemical propulsion and spend 30 days in a low-altitude (100 km) orbit. Programmatic goals included a launch as early as 2012. The study was performed by a study team at the Jet Propulsion Laboratory, with science support from the Europa Working Group (EWG) – a subgroup of the Outer Planets Assessment Group (OPAG). To achieve the science goals defined by the EWG this orbiter would perform detailed observations and measurements of the Europan surface and subsurface and of the local magnetic and radiation environments. Unlike studies of similar mission concepts performed within the past decade, this mission was not constrained to a particular type of short-duration transfer to Jupiter. Relaxation of that constraint yields a greatly increased mass delivery capability for a given launch vehicle (LV), enough for a scientifically compelling payload, and possibly enough to allow delivery and support of a Europa lander. The study team developed a reference mission that would launch on a Delta IV-Heavy LV to a Venus-Earth-Earth gravity assist (VEEGA) trajectory that would minimize post-launch ΔV and thus propellant mass. The total mission duration would be ~8 years, including a 6.5-year cruise to Jupiter, 1.5-year Jovian tour, and 30-day science mission upon arriving in Europa orbit in 2020. Use of Earth gravity assists, heavy-lift Evolved Expendable Launch Vehicles (EELVs), Radioisotope Power Systems (RPSs), and radiation tolerant electronics and subsystems would enable the mission as designed.

SCIENCE OBJECTIVES

The compelling combination of being a potential abode for extraterrestrial life with strong evidence for recent crustal activity prompted the National Research Council's Solar System Exploration Decadal Survey [1] to make Europa its highest priority for future outer solar system exploration. Discovering life on another celestial body would be nothing less than a major milestone in the history of humanity, with ramifications far beyond biology. Liquid water is known to be a prerequisite for life as we know it. Aside from Earth, Europa is the only solar system object showing evidence for extensive liquid water oceans. If oceans are indeed there, they might harbor life, and it might be possible both to detect that life and to study it scientifically. In addition to its astrobiological potential, Europa offers clues to understanding important geophysical processes. Its surface is both geologically youthful and extensively fractured. What processes could have led to the geologically recent resurfacing of Europa, and then to its extensive crustal evolution? The energy sources driving these global-scale events are not obvious, nor are their temporal characters. Do Europa's fracture zones creep relatively quietly and nearly

continuously, or do they build stresses over time, eventually producing sudden, violent crustal movement? Europa thus represents a natural laboratory for studying geophysical processes that are at once alien (global resurfacing) and yet familiar (crustal fracturing, causing "Europa quakes").

Because Europa probably formed as part of the Jovian family in the outer solar system, its composition is of interest to scientists studying the origin and evolution of planetary systems. Geologists and astrobiologists likewise want to know which minerals and which organic compounds are present, atop or mixed in with the abundant water ice of the outer crust. Last but not least, Europa orbits deep within Jupiter's complex magnetosphere, itself a focus of much current and future scientific investigation (e.g., NASA's Juno mission) and the ultimate cause of the severe radiation belts that plague spacecraft visiting the inner Galilean satellites. Some of the best current evidence for the existence for a Europan ocean comes from the Galileo Mission's magnetic field measurements obtained during Europa flybys.

In short, nearly every aspect of this enigmatic moon has something to teach us. Whether or not life may eventually be found, Europa science will improve our understanding of our own planet and its place in the cosmos.

Likely science objectives for future flagship-class orbiter missions to Europa have been formulated and refined over a number of years. The OPAG's EWG completed the most recent iteration of this process in 2005 [2]. They identified six major objectives of equal priority, listed below with specific sub-objectives (most of them measurement objectives) listed in priority order.

I. Confirm the presence of a subsurface ocean

1. Determine the amplitude and phase of the gravitational tide
2. Determine the amplitude and phase of the induced magnetic field at several frequencies
3. Determine the amplitude and phase of the surface motion during a tidal cycle
4. Determine the amplitude of libration
5. Search for active, tidally-induced crustal deformation features

II. Characterize the 3-dimensional configuration of the icy crust, including possible zones of liquid

1. Search for shallow subsurface liquids
2. Determine possible correlation of surface features to subsurface structure
3. Characterize surface regolith

III. Map organic and inorganic surface compositions, especially as related to astrobiology

1. Search for signs of past or present life
2. Relate compositions to geological processes, especially with regard to possible "communication" with the interior
3. Determine past and present "habitability"

IV. Characterize surface features and identify candidate sites for future exploration

1. Characterize magmatic and tectonic features
2. Search for areas indicative of surface-subsurface exchange
3. Search for areas of recent or current geological activity
4. Assess erosion and deposition processes (impact gardening, mass wasting, etc.)
5. Investigate local and global heat flow
6. Assess surface ages and subsurface structure using impact craters

V. Characterize the magnetic field and radiation environment

1. Determine the radiation effects on surface ice redox chemistry
2. Characterize exogenic material derived from the Jovian plasma
3. Characterize magnetospheric sputtering interactions with the surface
4. Determine the structure and dynamics of the ionosphere and neutral atmosphere

VI. Understand the environment of Europa in the context of the Jovian system

1. Determine the gravitational interactions between Europa and the Jovian system
2. Understand cratering/regolith formation in context of Callisto and Ganymede
3. Determine micrometeoroid mass flux and composition in Europa's orbit
4. Study Jupiter's atmosphere as input to the magnetosphere and its role in Europa's evolution
5. Investigate Jovian aurora processes and links to the interplanetary solar wind and field-aligned current flows around the moons
6. Characterize the Jovian rings and the relations to collisions with the moons

This list of science objectives is both comprehensive and ambitious. Nonetheless, the suite of science instruments identified in the present study has the potential to address and successfully accomplish most of them.

SCIENCE INSTRUMENTS

The list of instruments selected for the present study's 150-kg payload was developed through collaborative discussions between the JPL study team and the EWG. The 150-kg payload mass allocation restricts the number of instruments that may be carried. While some of these instruments are based on designs that have already flown, others reflect

current best knowledge of what might be accomplished with current and soon-to-be-available technology.

Table 1 lists and describes the science instruments selected for this study and identifies the science objectives they address.

STUDY ASSUMPTIONS

This study makes several assumptions that affected the mission architecture and orbiter design. These assumptions are:

- A sufficient quantity of fueled RPSs would be available for a 2012 launch. (Subsequent discussions with the US Department of Energy suggest that a 2015 launch date would be more realistic.)
- Planetary protection requirements would permit the orbiter to impact Europa at the end of the mission.
- Existing 34-m DSN antennas would be used (with some site-specific augmentation) for telecommunications with the orbiter. Nothing would be done to preclude the use of an upgraded DSN.
- Science instrument electronics would be radiation tolerant to 100 krad (RDF=1), and spacecraft subsystem electronics would be hardened to 300 krad or 1 Mrad.
- All subsystems would reach TRL 6 by 2008 in order to support the reference 2012 launch date. This would require an aggressive, well-funded program to complete development of several key subsystems, including radiation-hardened high-density solid state memory, and miniaturization of instrument electronics.

Table 1. Europa Orbiter Instruments and Science Traceability Matrix

Instrument	Purpose	Science Goal Addressed
Two-band Sounder	Map the 3-dimensional crustal structure of Europa, resolving stratigraphic zones of partial melting (if present); to potentially detect the lower crustal boundary and confirm the presence of a liquid water ocean	I, II, IV
Laser Altimeter	Map the global topographic relief of Europa for geological investigations and for geodetic studies (characterize the amplitude of the tidal bulge)	I, IV
Wide-Angle Camera	Image the surface of Europa at better than 100 m/pixel resolution	IV, II, VI
VIS/NIR Mapper	Map the distributions and determine the compositions of non-ice materials on Europa's surface	III, IV
VIS/MWIR Spectrometer	Map the distributions and determine the compositions of non-ice materials on Europa's surface	III, IV
MeV Ion Spectrometer	Characterize the distribution of energetic particles within the magnetospheric environment of Europa	V, VI
keV Ion Spectrometer	Characterize the electromagnetic plasma wave activity in the vicinity of Europa	V, VI
Ion and Neutral Mass Spectrometer	Sample the sputtered atmosphere of Europa, to infer surface compositions and describe the interaction of magnetospheric particles with the icy surface	III, V
Magnetometer	Quantify Europa's induced magnetic response to the rapidly varying Jovian magnetic field, providing information about the distribution of subsurface liquid water	I, V, VI

MISSION ARCHITECTURE

The Europa orbiter would be a Cassini-class spacecraft that would launch in 2012 on a Delta IV-Heavy LV. As conceived, MMRTGs would be used to power the orbiter due to the mission's high power requirements (>700 We at EOM), Europa's distance from the Sun, and its harsh radiation environment. A VEEGA trajectory (Fig. 1) would be used to provide a large delivered mass capability to Europa while maintaining a reasonable trip duration. The total flight time to Europa would be ~8 years, including a 1.5 year Jovian tour consisting of over a dozen flybys of the Galilean icy moons (Fig. 2) before entering Europa orbit.

The use of Earth flybys would effectively enable this mission due to the reduced post-launch ΔV and associated propellant required for the orbiter, which increases the amount of payload than could be delivered to Europa compared with direct trajectories. Up to 7230 kg of mass could be injected to the VEEGA trajectory (C3=14 km^2/s^2) using the Delta IV-Heavy LV (an Atlas V-551 LV could inject up to 4920 kg to the same C3).

A ΔV-EGA trajectory (C3~27 km^2/s^2) was also considered that would have an injected mass capability of ~5600 kg using the Delta IV-Heavy (the Atlas V-551 could not support the reference orbiter on a ΔV-EGA trajectory). In comparison, only about ~2200 kg could be injected into a direct trajectory (C3=80 km^2/s^2) using the Delta IV-Heavy with a new 3rd stage propulsion system. This would be inadequate for the reference orbiter design (an Atlas V-551 was also unable to support the reference orbiter on a direct trajectory).

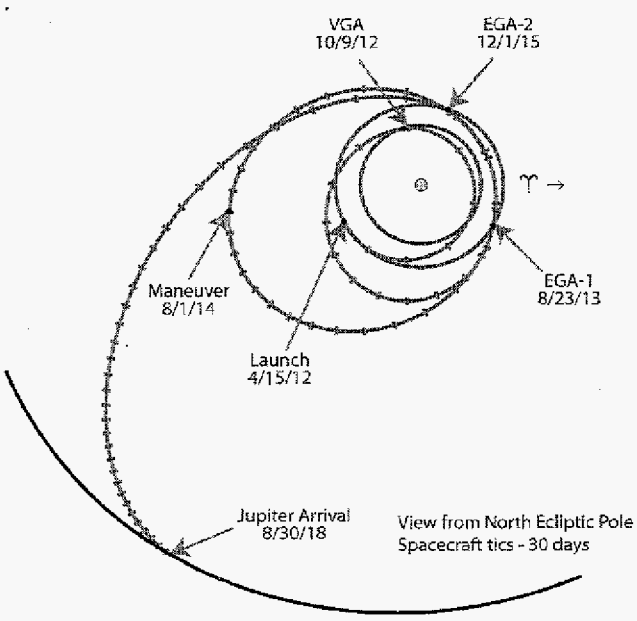

Figure 1. VEEGA Trajectory for the Europa Mission

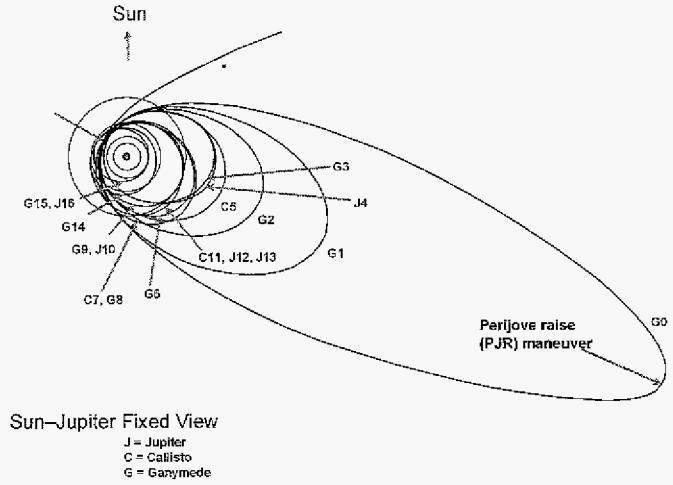

Figure 2. Representative Europa Orbiter Jovian Tour

The reference orbiter would have a 6.5 year cruise phase between time of launch and Jupiter Orbit Insertion (JOI). Following JOI, the orbiter would experience over a dozen flybys of Ganymede and Callisto during the Jovian tour as the orbiter worked its way towards Europa orbit. Significant opportunities would be available during the tour to take high value science measurements of the Galilean icy moons and other targets of opportunity

After ~25 orbits around the Jovian system, the orbiter would perform Europa Orbit Insertion (EOI), entering a nearly polar (~80 degree inclination), 100-km altitude circular orbit. This orbit is driven by the science and instrument requirement to map the entire surface of Europa at least once during the nominal 30 day orbital mission duration.

The high radiation environment of the Jovian system is a key driver for the spacecraft design. The reference orbiter concept was designed to withstand 30 days in Europa orbit, with an estimated total mission dose of ~1.8 Mrads (behind 100 mils of aluminum). This dose is above the tolerance levels of most unshielded electronics, and thus radiation vaults and spot shielding are used to manage the dose level.

All surface measurements would be taken in a push broom fashion, with the optical and radar instruments co-bore-sighted along the spacecraft long-axis and nadir pointed towards Europa.

The short 30-day mission duration drives the need for a high performance telecommunication system to downlink the required data to Earth. The orbiter would include a 3-m diameter, articulating high gain antenna (HGA). Initially launched in a stowed configuration (Fig. 3), the HGA would be deployed following orbiter separation from the launch vehicle (Fig. 4).

Science measurements would be divided into separate daytime and nighttime science modes (The locations of the science instruments are shown in Figure 5). The daytime science mode involves taking laser altimetry, visible and NIR imagery, visible and MWIR spectrometry, low and high energy particle spectrometry, ion and neutral spectrometry, and magnetometry. The nighttime science mode involves operating the 2-band radar sounder, performing high and low-energy particle spectrometry, and magnetometry. The daytime science mode is the dominant power mode for the spacecraft. Secondary batteries would be used for load leveling during this mode, and be recharged during the lower-power nighttime science mode.

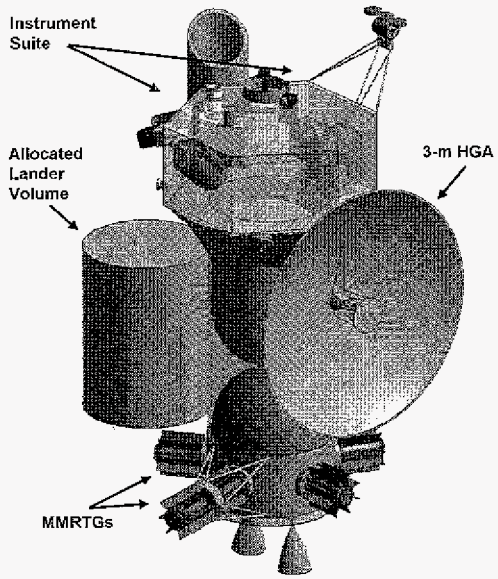

Figure 3. Conceptual Europa Orbiter in the Stowed Configuration

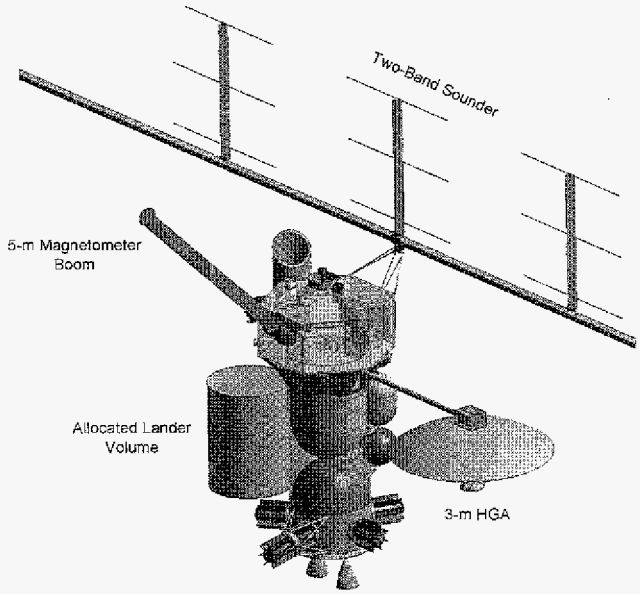

Figure 4. Conceptual Europa orbiter in the Deployed Configuration

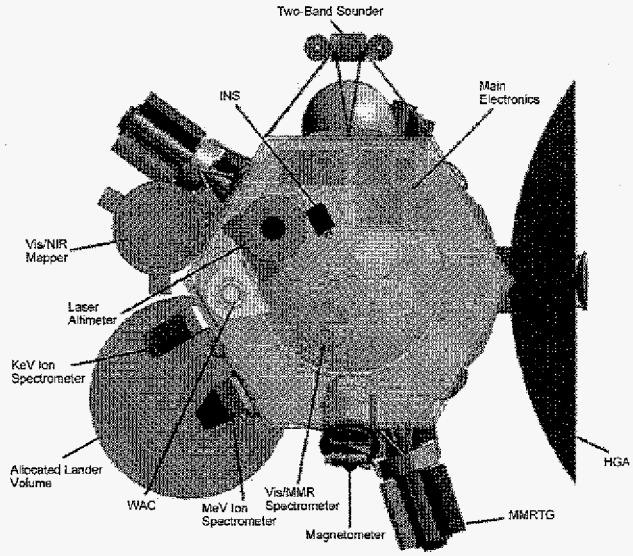

Figure 5. Undeployed Instrument Complement of the Conceptual Europa Orbiter

RPS CHARACTERISTICS

The reference Europa orbiter concept would use seven Multi-Mission Radioisotope Thermoelectric Generators (MMRTGs) to produce ~875 We at BOM, and ~770 We after 8 years at EOM. The MMRTG (Fig. 6) has a specific power of 2.8 We/kg and conversion efficiency of ~6.3% using PbTe/TAGS thermoelectrics [3]. Each MMRTG contains eight General Purpose Heat Source (GPHS) modules, and produces ~2000 Wth of heat and ~125 We of electricity at BOM. The MMRTG was baselined for this mission due to its heritage with previous RTG systems, its use of cross-strapped series-parallel thermoelectrics increasing its robustness, its passive, steady state operation, and its inherently high-radiation tolerance. Furthermore, NASA is baselining an MMRTG on the Mars Science Laboratory mission that would launch in 2009 that would demonstrate MMRTG performance in flight conditions prior to the 2012 Europa orbiter launch.

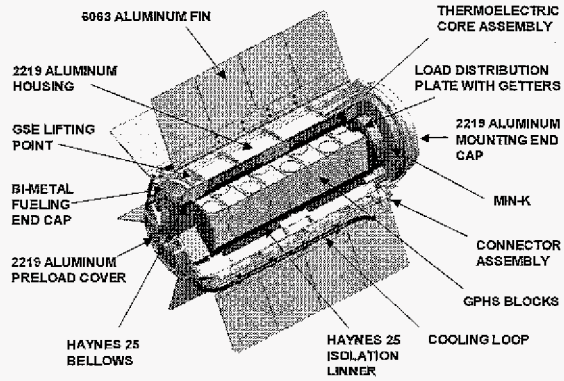

Figure 6. Illustration of the Multi-Mission Radioisotope Thermoelectric Generator (DOE)

TABLE 2. MMRTG Power System Performance for the Conceptual Europa Orbiter Mission.

Parameter	Value
Number of MMRTGs	7
Power per MMRTG (BOM), We	125
Total Power (BOM), We	875
Mission Duration, Years	8
Degradation Rate per year (%/year)	1.6
Total Power (EOM), We	769
Mass per MMRTG, kg	44
Additional shielding / MMRTG, kg	3
Total RPS Mass, kg	329

Stirling Radioisotope Generators (SRGs) were also considered for the Europa orbiter mission concept. Each SRG would produce ~500 Wth of heat and ~114 We of electricity at BOM, and have a specific power of 3.4 We/kg [3]. With a ~23% conversion efficiency, the SRG requires uses just two GPHS modules per unit to generate a similar amount of electrical power as one MMRTG. A total of eight SRGs would be required for the conceptual Europa orbiter mission: seven to generate the requisite power level, and one redundant unit per JPL Design Principles [4]. Due to the lower radiation tolerance of the SRG's electronic controller (rated to 50-100 krad), significant shielding mass would be required to protect the electronics from the intense Jovian radiation environment. Additionally, the SRG is not designed to withstand the dynamic launch environment of the Delta IV-Heavy LV; this study assumed that acoustic tiles could be used to lower the dynamic environment of this LV such that SRGs could be used. However, the additional mass associated with radiation shielding and acoustic tiles makes the SRG-based Europa orbiter more than 100 kg heavier than the reference orbiter using MMRTGs. The ability of the Jovian radiation environment to induce Single Event Upsets (SEUs) in the SRG controller was not analyzed, but could pose additional challenges to the mission. A significant advantage of the SRG, however, is its lower fuel usage which could be a deciding factor were ^{238}Pu availability an issue.

An upgraded MMRTG with higher specific power (~4 We/kg) relative to the MMRTG was also considered in the power systems trades. This unit would share much design heritage with the MMRTG and use higher efficiency (9%) Skutterudite thermoelectric modules in place of the latter's PbTe/TAGS thermoelectrics. The result would be a power system mass savings of over 100 kg compared with the reference design, with system ripple effects increasing the actual mass savings even further. However, the upgraded MMRTG would be a new development item and was not expected to be available until after 2014, making it unsuitable for the reference 2012 launch date.

In summary, MMRTGs were selected as the reference power system for the Europa orbiter concept as they provide the greatest amount of design heritage, radiation hardness, simplicity of design (no moving parts or active electronics), and mass savings compared with other RPS options assumed to be available by the 2012 launch date.

DATA AND TELECOMMUNICATIONS

The short mission duration at Europa (30 days) and the high instrument data rates require a high performance telecommunications system, illustrated in Figure 7. An articulating two degree-of-freedom, 3-m diameter, Ka-band HGA would be used with redundant 50-W_{RF} amplifiers. The HGA would be pointed with 1 milliradian accuracy using an X-band uplink phase tracking system located on the HGA. Ka-band would be used for downlink and X-band for uplink. The downlink rate was estimated at 340 kb/s at 5.2 AU using existing 34-m Deep Space Network (DSN) antennas (three at Goldstone, and two each at Canberra and Madrid). The 70-m DSN antennas using X-band were considered, but the downlink rate would be slightly less at ~300 kb/s, and it is questionable whether these antennas would still be functioning when the orbiter reached Europa in ~2020. Were an upgraded DSN available, the downlink data rate could be increased by approximately an order of magnitude using an array of 180 12-m apertures.

In addition to the HGA, Ka-band Medium Gain Antennas (MGAs) and Ka/X-band Low Gain Antennas (LGAs) would be included for communications before HGA deployment, and for safing and spacecraft recovery. The telecom system would support two-way Ka/Ka-band gravity science links through the 34-m DSN antennas.

THERMAL

The conceptual Europa orbiter would use the heat generated by the MMRTGs to maintain spacecraft operating temperatures throughout the mission. This reduces the number of electrical heaters that would otherwise be required, thus minimizing the number of MMRTGs needed. Approximately 300 Wth would be required to maintain orbiter operating temperatures, which could be supplied by a single MMRTG. The spacecraft would use an active cooling loop with redundant pumps and flow control valves to distribute the RPS heat from the MMRTG cooling tubes to the orbiter subsystems. Thermal control louvers would be used to regulate the temperature of spacecraft systems and prevent them from overheating. Passive thermal-control elements, such as coatings, low absorptivity paint, multilayer insulation, and reflective surfaces would be included in the thermal system design.

ATTITUDE AND ARTICULATION CONTROL

The configuration of the conceptual Europa orbiter was designed to minimize external torque/momentum buildup due to Europa's gravity gradient. Instruments would be nadir-pointed with fixed yaw to support push-broom imaging and global mapping. Downlink would be performed simultaneously with science taking while the spacecraft was in view of Earth. A 2-DOF gimbaled antenna would be used to maximize downlink opportunities. Stellar inertial attitude determination would be performed using active pixel sensors (APSs) and hemispherical resonating gyros.

The Europa orbiter would be three-axis stabilized, using reaction wheels (RW) for fine pointing, and thrusters for RW desaturation. Four RWs would be used including one redundant unit, and would be sized to support infrequent wheel unloading to minimize spacecraft disturbances that could adversely affect science measurements. A redundant set of 16 minimum-impulse thrusters, fired in couples, would provide nearly pure torque for unloading the reaction wheels. This unloading would be performed while in view of Earth to support precise orbit determination for radio science.

Pointing stability requirements are based on the exposure times needing for imaging at Europa. The pointing knowledge requirement is $\leq$0.5 mradian for the nadir-pointed axis of the optical bench; the pointing control requirement is $\leq$1 mradian; and the pointing stability requirement in $\pm$0.005 mrad/sec per axis. Gyros with a bias stability of 0.005 mrad/hr per axis would be used to help meet the pointing stability requirement.

COMMAND AND DATA HANDLING

The command and data handling (C&DH) system facilitates the transfer of data between all spacecraft subsystems and performs science data storage and retrieval via solid state recorder (SSR) mass storage devices. The orbiter C&DH system is a dual-string design that would use a combination of radiation hardened commercially available avionics and X2000-based components.

The reference SSR design has a performance requirement of ~18 Gbits of total storage (EOM) and 11 Mbits/sec peak data rate. This data volume requirement is sufficient to handle the higher downlink data volume possible with the upgraded DSN (180 12-m antennas) assuming it was available for use during the mission (only ~ 2 Gbits of storage would be required using the existing DSN antennas). The SSR device would be build from radiation-hardened, SEU-tolerant SRAM memory.

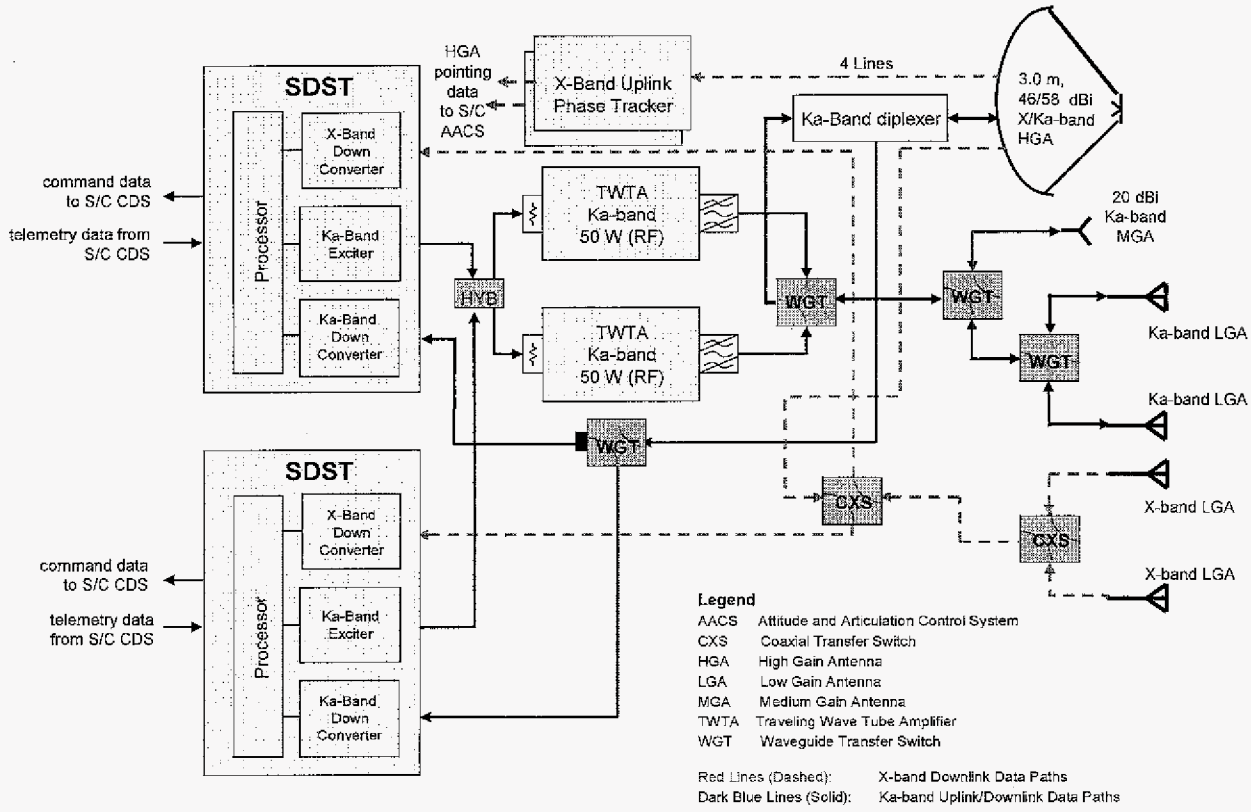

Figure 7. Telecom Block Diagram for the Conceptual Europa Orbiter

PROPULSION

The total ΔV requirement for the Europa orbiter mission would be ~2410 m/s, with ~1080 m/s allocated to Jupiter Orbit Insertion (JOI) using a Ganymede gravity assist, 820 m/s dedicated to Perijove Raise (PJR) and endgame, and the balance dedicated to other maneuvers including Deep Space Maneuvers (DSMs), JOI/EOI cleanup maneuvers, and Europa altitude changes. The total mass of propellant (fuel, oxidizer and pressurant) is estimated at ~3970 kg (Table 3).

The orbiter propulsion system would consist of separate high, intermediate, and low-thrust engines. The high-thrust system would use two redundant bipropellant 900-N HiPAT™ thrusters (Isp ~325 s) using hydrazine (N_2H_4) and nitrogen tetroxide (N_2O_4). These thrusters would perform all large ΔV maneuvers, including JOI, PJR, and endgame. The intermediate-thrust system would use eight redundant 36-N monoprop thrusters (Isp ~230 s), and nominally used for thrust vector control and trajectory correction maneuvers. The low-thrust system would use sixteen redundant Aerojet 0.7-N Minimum Impulse Thrusters (MITs) with an Isp ~230 s for attitude control and reaction wheel desaturation. Separate pressurization tanks would be used for the bipropellant and monopropellant systems.

TABLE 3. ΔV Estimates for the Europa Orbiter.

Activity	ΔV (m/s)	Prop Mass (kg)
Deep Space Maneuvers	139	300
Earth Biasing	50	105
JOI (with Ganymede GA)	1081	1905
Gravity Losses	27	40
PJR and Endgame	820	1061
Statistical DV (JOI/EOI	150	166
Europa Altitude Change	40	43
Statistical DV (Remainder)	100	148
Oxidizer and Residual Prop.	0	78
Pressurant	0	20
Total ΔV / Propellant Mass	**2407**	**3974**

POWER

The conceptual Europa orbiter has a power requirement of more than 700 We at EOM, similar to the Cassini spacecraft. Seven MMRTGs would be used to generate ~875 We at BOM, and ~770 We after 8 years (EOM). Load leveling would be performed during peak operating modes using two redundant 4.8 AH Super-NiCad batteries. Shunt regulators and shunt radiators would be used to regulate bus power by rejecting any unused electrical power generated by the MMRTGs.

The study team identified six power modes: three associated with launch, cruise, and spacecraft safing, and three related to different science phases of the mission. The high-power draw of the science modes drives the power system design; the non-science modes are relatively low-power as the instruments would be powered down during these phases of the mission. The science modes correspond to the following three phases of the mission (Table 4):

(1) Jupiter System Tour. This is the 1.5-year orbital pump-down to Europa where imaging, spectrometry, and magnetometry data would be taken during the multiple flybys of the Galilean moons and other targets of opportunity. The orbiter power draw during this mode is ~620 We during instrument operation.

(2) Europa Lit Side. During the sunlit portion of the Europa orbit, the spacecraft would acquire altimetry, imaging, spectrometry, and magnetometry data. This mode draws the greatest amount of power, ~720 We, as the telecommunications system would be operated in parallel with the instruments.

(3) Europa Unlit Side. During the portion of the orbit over unlit terrain, the sounder, spectrometers, and magnetometer would be operated. The power draw during this mode is ~465 We.

Table 4. Europa Orbiter Power Estimates

Subsystem	Jupiter System Tour	Europa Lit Side	Europa Unlit Side
Instruments	**103.6**	**129.4**	**86.7**
2-Band Sounder Radar	0	5	61
Laser Altimeter	0	20.8	0
Wide Angle Camera	1.9	1.9	1
VIS/NIR Mapper	21.3	21.3	1
VIS/MWIR Spec.	30	30	1
MeV Ion Spectrometer	10	10	10
keV Ion Spectrometer	11.4	11.4	11.4
Ion and Neutral Spectrometer	27.7	27.7	0
Magnetometer	1.3	1.3	1.3
Bus	**328.3**	**374.0**	**238.7**
Attitude Control	82.6	82.6	82.6
Command & Data	28.0	40.5	40.5
Power	49.3	57.4	37.1
Propulsion	3.3	3.3	3.3
Telecomm	120.0	155.0	40.0
Thermal	45.2	35.2	35.2
Spacecraft	**431.9**	**503.3**	**325.3**
Contingency (43%)	185.7	216.4	139.9
Spacecraft	**617.7**	**719.7**	**465.2**

MASS

The total mass of the Europa orbiter was estimated at 6370 kg including 43% contingency on all subsystems except propellant. The orbiter dry mass is ~2400 kg. The propellant mass (including pressurant and oxidizer) is ~3975 kg, with most of this allocated to JOI (1905 kg), and PJR and endgame (~1060 kg).

The orbiter bus would have a dry mass of ~1970 kg, driven primarily by the masses of the spacecraft structure and mechanisms (643 kg), RPS-based power system (368 kg), and propulsion system (323 kg). The instrument suite would have a mass of 154 kg, with the Two-Band Sounder being the heaviest instrument at 43 kg (Table 5).

The total injected mass capability of the Delta IV-Heavy to a C3 of 14 km^2/s^2 (for the VEEGA trajectory) is ~7230 kg for a 2012 launch opportunity. The propulsion, structure, and ACS subsystems on the orbiter were all designed *a priori* to accommodate the entire 7230 kg injected mass capability of the Delta IV-Heavy. This leaves ~ 856 kg of mass (beyond the 6370 kg spacecraft wet mass) potentially available for the mission. Options for using this mass could include adding a larger payload, more shielding for a longer mission, greater mass contingency, or a Europa lander.

Table 5. Mass Estimates of the Europa Orbiter (Includes 43% Contingency on All Dry Mass Values)

Subsystem	Mass w/ Contingency (kg)
Instruments	**154**
Two-Band Sounder	43
Laser Altimeter	17
Wide Angle Camera	10
VIS/NIR Mapper	29
VIS/MWIR Spectrometer	17
MeV Ion Spectrometer	14
keV Ion Spectrometer	10
Ion and Neutral Spectrometer	14
Bus	**1969**
Attitude Control	63
Command & Data	45
Power	368
Propulsion	323
Structures & Mechanisms	643
S/C Adapter	80
Cabling	91
Telecomm	95
Thermal	109
Radiation Vaults	154
System Margin	275
Spacecraft Total (Dry)	**2398**
Propellant	3974
Spacecraft (Wet)	**6372**
Potentially Available Mass	**856**
Total Spacecraft (Wet)	**7228**

The orbiter mass was also calculated assuming no unallocated dry mass (i.e., did not assume *a priori* a 7230 kg spacecraft). For this case, the orbiter wet mass would be ~4875 kg with 43% contingency on all systems except propellant. The orbiter dry mass would be ~2200 kg, and the propellant mass would be ~2600 kg. The orbiter wet mass for this case is ~2360 kg lighter than the reference case as the latter would require nearly 1300 kg more propellant to accommodate the full 7230 kg injected mass capability of the Delta IV-Heavy LV.

RADIATION

The Jovian system has amongst the most intense radiation environments of any planetary body within our Solar System. This has a significant effect on the choice of materials and electronics that would be used for a Europa mission, and is a key consideration for the spacecraft design. The reference Jovian tour was selected to minimize the radiation dose by maintaining a large perijove during the early part of the pump down. The total dose expected for the mission is ~1.8 Mrad behind 100 mils of aluminum, and is based on using the updated results of the Galileo Interim Radiation Electrons model [5]. About half of this dose would be received during the 1.5-year Jovian tour, and the other half received during the nominal 30 day science mission in orbit around Europa. Spacecraft radiation effects due to the Jovian environment are comprised mainly of high energy electrons, with high energy protons, bremsstrahlung, and galactic cosmic radiation (GCR) contributing only minimally to the overall dose. Likewise, the dose due to neutrons, betas and gammas produced by the ^{238}Pu fuel within the seven MMRTGs would be relatively small ($\leq$ 1%) compared with that received by the environment.

Even with recent advances in radiation-hardened electronics, the extreme radiation environment requires the use of extensive shielding. The Europa orbiter would use a mixture of rad-hard (300 krad and 1 Mrad) and rad-tolerant (100 krad) parts developed from the X2000 program and/or from commercial industry. A combination of radiation vaults and spot shielding would be used in the present orbiter concept. The vault wall thickness would range from 80 mils of aluminum for 1 Mrad parts, to 900 mils of aluminum for 100 krad parts (RDF=1).

The reference Europa orbiter would include enough shielding to last for ~30 days in Europa orbit before the dose exceeded the 1.8 Mrad (behind 100 mils of Al) design point. This is a relatively short duration for the desired science investigations, and thus analyses were performed to estimate

the additional shielding mass required to extend the Europa orbiter duration to more than 30 days. Preliminary results indicate that ~100 kg of additional shielding would be required for each 30-day extension in Europa orbit (Fig. 8). As over 850 kg of mass is potentially available for mission enhancements or growth margin (Table 5), this opens the scientifically attractive possibility of missions lasting 60 days, 90 days, or even longer.

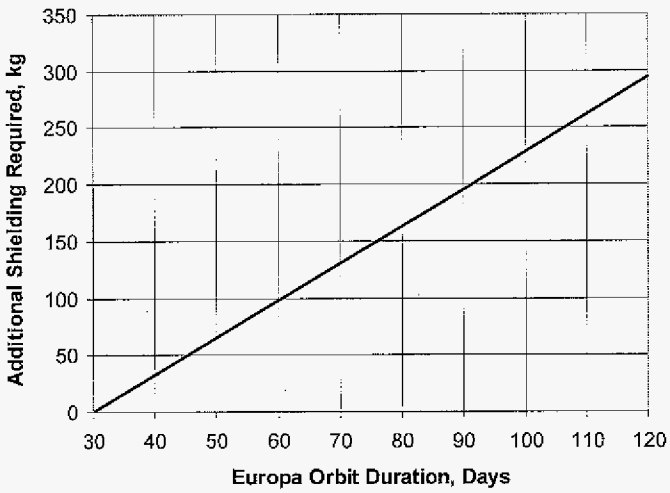

Figure 8. Additional Shielding Mass Required As a Function of Europa Orbit Duration.

SUMMARY AND CONCLUSIONS

Europa is among the most fascinating objects in the solar system for its potential to harbor life in its icy crust or a possible subsurface ocean. This Europa orbiter mission is designed to answer the question "Does Europa have an extensive subsurface ocean?" and achieve the science community's other high-priority goals. The mission concept assumes a 2012 launch date, and VEEGA trajectory, a Delta IV-Heavy LV, seven MMRTGs, and a combination of rad-tolerant and rad-hardened electronics. The use of Earth flyby trajectories, such as VEEGA and ΔV-EGA would yield a significantly larger delivered mass to Europa than is possible using a direct trajectory. The combination of VEEGA trajectory and Delta IV-Heavy LV would permit an injected mass capability of 7230 kg for a 2012 launch opportunity. This would permit the reference 6370-kg orbiter and ~860 kg of additional, potentially available mass. This potentially available mass could be used for including additional instrumentation, adding more shielding to extend the mission duration beyond 30 days at Europa, adding more growth margin, or even adding a Europa lander.

REFERENCES

[1] National Research Council, "New Frontiers in the Solar System – An Integration Exploration Strategy", National Academies Press, 2003. Available at http://www.nap.edu/catalog/10432.html.

[2] Outer Planets Assessment Group (OPAG) Website: http://www.lpi.usra.edu/opag/

[3] R.D. Abelson, T.S. Balint, K. Coste, J.E. Randolph, G.R. Schmidt, T. Schriener, J.H. Shirley, and T.R. Spilker, "Expanding Frontiers with Standard Radioisotope Power Systems", JPL Document D-28902, November, 2004. Available at the following website: http://solarsystem.nasa.gov/scitech/display.cfm?ST_ID=705

[4] N. Yarnell, "Design, Verification/Validation and Ops Principles for Flight Systems (Design Principles) Revision 2", JPL Internal Document D-17868, March 3, 2003.

[5] H.B. Garrett, I. Jun, J.M. Ratliff, W.E. Evans, G.A. Clough, R.W. McEntire, "Galileo Interim Radiation Electron Model", JPL Publication 03-6, February 2003.

BIOGRAPHY

Dr. Robert Abelson is a senior systems engineer and mission architect at the Jet Propulsion Laboratory. He is the team lead for the JPL Mission and Systems Engineering Team, which is chartered with studying current and future RPS technologies and assessing their potential ability to benefit or enable high priority mission concepts. Rob has worked in the aerospace industry for 8 years, and has held lead positions in the International Space Station program at Boeing, Rocketdyne, and in the Missile Defense Program at Boeing, Anaheim. Rob possesses a B.S. degree in mechanical engineering, an M.S. in nuclear fission engineering, and a doctorate in mechanical engineering with an emphasis on nuclear fusion, all from UCLA. (Need picture).

Spilker – Need bio and picture
Shirley – Need bio and picture
Green – Need bio and picture
Smythe – Need bio and picture

ACKNOWLEDGMENTS

The work described in this paper was carried out at the Jet Propulsion Laboratory, California Institute of Technology, under contract with the National Aeronautics and Space Administration. The authors wish to acknowledge the contributions and support of Gary Burdick, Thierry Caillat, Jim Cutts, the Europa Working Group, Richard Ewell, Ron Greeley, Torrence Johnson, Insoo Jun, Shawn Kang, Elizabeth Kolawa, Jan Ludwinski, Ajay Misra, Bill Nesmith, Curt Niebur, Jim Robinson, Rao Surampudi, Bob Wiley, and all of the other persons who made this effort possible. Special thanks go to the members of JPL's Team-X concurrent engineering team who performed the detailed design calculations for the present study.