Prototype development of a Geostationary Synthetic Thinned Aperture Radiometer, GeoSTAR

A. B. Tanner, W. J. Wilson, P. P. Kangaslahti, B. H. Lambrigsten, S.J. Dinardo
Jet Propulsion Laboratory, California Institute of Technology
Pasadena, CA

J.R.Piepmeier
Goddard Space Flight Center
Greenbelt, MD

C.S. Ruf, S.Rogacki, S.M. Gross, S. Musko
University of Michigan
Ann Arbor, MI

***Abstract*—Preliminary details of a 2-D synthetic aperture radiometer prototype operating from 50 to 55 GHz will be presented. The laboratory prototype is being developed to demonstrate the technologies and system design needed to do millimeter-wave atmospheric soundings with high spatial resolution from Geostationary orbit. The concept is to deploy a large thinned aperture Y-array on a geostationary satellite, and to use aperture synthesis to obtain images of the Earth without the need for a large mechanically scanned antenna. The laboratory prototype consists of a Y-array of 24 horn antennas, MMIC receivers, and a digital cross-correlation sub-system.**

1. INTRODUCTION

Geostationary atmospheric remote sensing by microwave and millimeter-wave radiometers has been a long sought-after capability. Geostationary satellites provide a unique platform to continuously monitor rapidly evolving and dynamic atmospheric phenomenon such as hurricanes and thunderstorms, and microwave and millimeter-wave radiometers offer the best means of measuring temperature, water vapor, and rain from satellites- due to their ability to penetrate cloud cover. Yet microwave observations have not been feasible from geostationary satellites because of the very large antennas and scanning mechanisms which are required. Aperture synthesis offers a potential solution to this problem.

In response to a 2002 NASA Research Announcement calling for proposals to develop technology to enable new observational capabilities from geostationary orbits, the Geostationary Synthetic Thinned Aperture Radiometer (GeoSTAR) was proposed. GeoSTAR synthesizes a large aperture to provide high spatial resolution from GEO without requiring the very large and massive scanning antenna of a real-aperture system. With sponsorship by the NASA Instrument Incubator Program (IIP), an effort is currently under way at the Jet Propulsion Laboratory to develop the required technology and demonstrate the feasibility of the synthetic aperture approach with a small ground based prototype. This is being done with collaborators at the NASA Goddard Space Flight Center and the University of Michigan. The prototype operates from 50 to 55 GHz, which is suitable for atmospheric temperature sounding. The objectives are to demonstrate the measurement concept, test the performance, evaluate the calibration approach, assess measurement accuracy and reduce the technology risk for a future space instrument.

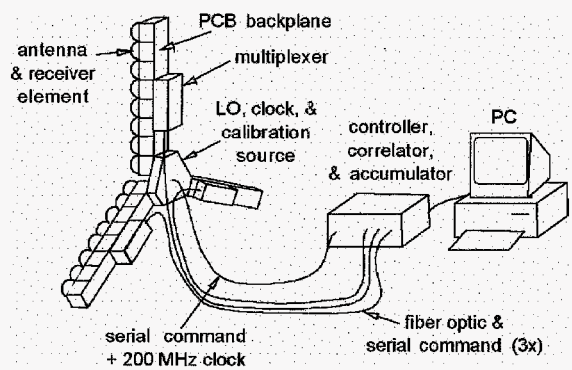

Fig 1. GeoSTAR configuration

2. INSTRUMENT CONCEPT

As illustrated in Figure 1, GeoSTAR consists of a Y-array of horn antennas and receivers, and a digital system which computes cross-correlations between the IF signals of the receivers. Complex cross-correlations are formed between all possible pairs of antennas of the array. Each correlator and antenna pair forms an interferometer which measures a particular spatial harmonic of the brightness temperature image across the field of view (FOV). These correlations are also called visibilities, with units of Kelvin. Visibility is the Fourier Transform of the brightness temperature, where the transform variables are horizontal and vertical (U and V) element spacings in the visibility domain, and horizontal and vertical pixel position in the brightness temperature image domain.. By measuring the visibility with an interferometer over a range of spacings one can thus reconstruct, or "synthesize," an image by Fourier transform.

The specific "Y" configuration of the GeoSTAR array is motivated by the need to measure a complete set of visibility samples with a minimum number of antennas. There are many potential configurations for the array (all are called "thinned" arrays) but the "Y" array is one of the best in terms of efficient use of antennas and in terms of the simplicity of the structure- which lends itself well to a spaceborne deployment. As illustrated in Figure 2, the spacings between the various antenna pairs yields a uniform hexagonal grid of visibility samples. The area covered by this sampling grid is the synthetic aperture of the system, which is comparable to a real aperture of the same outer dimensions (e.g. a dish antenna, or a filled aperture phased array).

The smallest spacing of the sample grid in Figure 2 determines the unambiguous field of view, which for GeoSTAR must be larger than the earth disk diameter of 17.5 degrees when viewed from GEO. This sets both the antenna spacing and the horn diameter at about 3.5 wavelengths, or 2.1 cm at 50 GHz, for example. The longest baseline determines the smallest spatial scale that can be resolved. To achieve a 50 km spatial resolution at 50 GHz, a baseline of about 4 meters is required. This corresponds to approximately 100 receiving elements per array arm, or a total of about 300 elements. This in turn results in about 30,000 unique baselines, 60,000 u-v sample points (with conjugate symmetry), and 60,000 independent pixels in the reconstructed brightness temperature image.

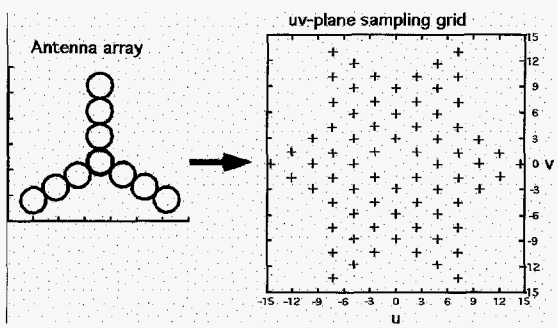

Fig. 2. Antenna array and UV samples

3. Prototype Hardware

A small scale prototype is being built to address the major technical challenges facing GeoSTAR. The challenges are centered around the issues of calibration and power consumption. Synthesis arrays are new and untested in atmospheric remote sensing applications, and the calibration poses many new problems, including those of stabilizing and/or characterizing the phase and amplitude response of the antenna patterns and of the receivers and correlators. System requirements need to be better understood - and related to real hardware. And power consumption per receiver and correlator must be demonstrably low - given the very large number of receivers and correlators. To these ends the prototype is being built with the same receiver technology, antenna design, calibration circuitry, and signal processing schemes as are envisioned for the spaceborne system. Only the number of antenna elements differ.

The prototype consists of a small array of 24 elements operating with 4 channels between 50 and 54 GHz. Figure 3 shows a current mechanical drawing of the prototype, which has evolved considerably from the earlier sketch of Figure 1. One change evident in Figure 3 concerns the basic layout of the Y array: note that- in contrast with Figure 2- there is no single horn at the center of the array. The center horn poses a packaging problem and the solution as shown in Figure 3 is to stagger the three arms counter clockwise, and then bring them together so that the three inner most horns form an equilateral triangle. This 'staggered-Y' configuration eliminates the need for an odd receiver at the center. The only penalty is a slight and negligible loss of visibility coverage. The new configuration also has an advantage in that all visibility samples in the UV plane may be derived from receivers located on different arms of the array; this eliminates a number of phase shifters and other components in the calibration and local oscillator sub-systems.

A simplified block diagram of the GeoSTAR prototype is shown in Figure 4. Figure 4 shows the signal flow from one of the 24 antennas through to the correlator. From left to right in Figure 4 the signal starts at the horn aperture with vertical polarization, and then passes through a WR-15 waveguide twist which aligns the waveguide to the orientation of the 8-element array arm. All the horns are aligned with the same polarization using waveguide twists.

After the twist the signal passes through an 8-way calibration feed which periodically injects a noise diode signal into all receivers from a common noise diode source. This signal will be used as a reference to stabilize the system against phase and system noise drifts. The assumption here is that the calibration distribution network- consisting of power dividers and couplers- is more stable that the receiver RF, IF, and correlator electronics. This assumption will be re-examined when the system is operational. The injected noise diode signal needs to be in the range of 1 to 10 Kelvin of equivalent noise temperature at the receiver input.

In Figure 4 the noise diode is distributed to the three arms via phase shifters. Each of these phase shifters consists of a pin diode and hybrid MMIC assembly which can switch between 0 degrees and 120 degrees. Correlations which occur between receivers of different arms can be measured by the noise diode with three possible phases using any two of these switches. This ensures that every correlator can be stabilized with respect to both phase and amplitude. Without th e phase shifters one must otherwise depend on perfect quadrature balance of the complex correlations- which is predictably not exact. It is also worth noting that the phase of the noise diode can not be shifted among the 8 antennas of a given arm, but that such a capability is not

needed given the staggered-Y arrangement of the antennas. With the staggered-Y all correlations within an arm represent visibility samples which are redundant to samples which can otherwise be obtained between elements of different arms.

Continuing the discussion in Figure 4, the antenna signal passes into the MMIC receiver module where it is amplified (noise figure of 3dB) using InP FET low noise amplifiers, and then double-sideband downconverted by subharmonic mixers to in-phase and quadrature IF signals of 100 MHz bandwidth. The 100 MHz is defined by lumped element filters. A photograph of a pre-prototype receiver module is shown in Figure 5. The local oscillator operates from 25 to 30 GHz, and is distributed via three phase shifters to each arm. These MMIC phase shifters periodically shift the phase between the four positions of 0, 90, 180, and 270 degrees. This is used to eliminates correlator biases (i.e. by synchronous demodulation of the 0/180 states and the 90/270 states) and to provide a redundant measure of mixer quadrature balance. Again, the staggered-Y arrangement of the array is crucial to this function since one would otherwise need phase shifters within each arm (this was indeed the original proposal- and it proved impractical due to the timing complexity when switching phase among all 24 receivers).

The in-phase and quadrature IF signals from each receiver are then digitized at a clock rate of 200 MHz. For reasons of product availability, the analog to digital converter is presently an 8-bit device. Minimally this could be replaced with a two-bit or possibly just a one-bit converter since the correlations only require 1-bit (i.e. the sign bit). The extra bits available in the prototype may be of some diagnostic use, however, and this will be evaluated as part of our algorithm development efforts. The correlator for the GeoSTAR prototype is being implemented in FPGAs by the University of Michigan following the design of a similar system which was built for an airborne radiometer [1]. An operational spaceborne system will use low-power application specific integrated circuits (ASICs).

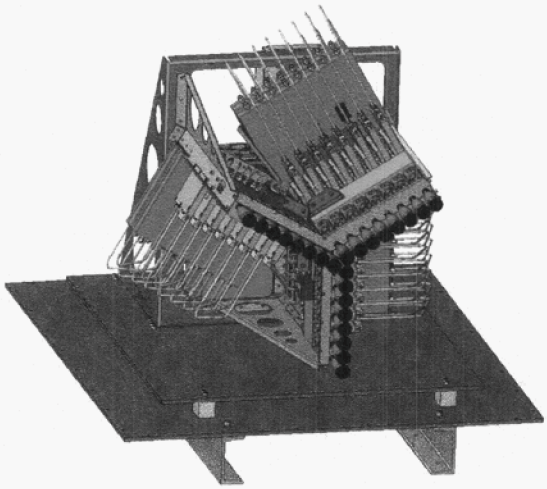

Fig. 3. The GeoSTAR prototype.

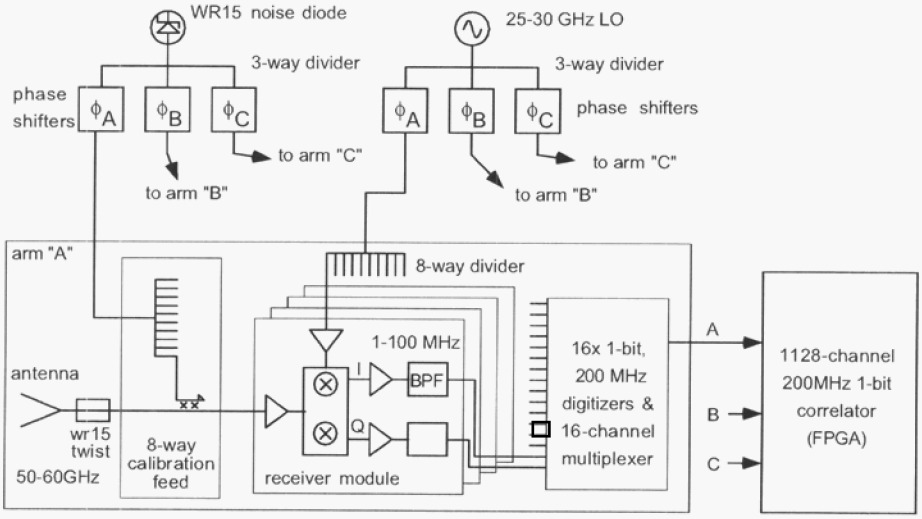

Fig. 4. Block diagram

4. SYSTEM STUDIES

In parallel with the hardware development, a number of system studies have been conducted to establish basic instrument hardware requirements. These studies have thus far depended on numerical simulations which model the earth brightness temperature as viewed from GEO, and then apply a number of presumed instrumental errors to examine their effects on reconstructed images. The primary errors of concern are (1) antenna pattern errors, (2) additive correlator errors such as those caused by correlator null offsets, and (3) gain and phase errors, such as those caused by uncertainty in the system noise temperature (which is needed to scale the raw 1-bit correlations to visibility - in units of Kelvin). Our guiding requirement is that the sum of all errors be no more than 1 K in brightness temperature.

The antenna pattern factors into the image reconstruction directly, and our studies have confirmed one simple fact: that image errors are proportional to antenna pattern uncertainty. A 0.1% uncertainty in the elemental antenna power pattern will cause 0.3 Kelvin of uncertainty given a 300 K brightness temperature, for example. Such precision will be difficult to obtain if there is any significant amount of scattering or mutual coupling among neighboring elements in the array. The antennas also need to maximize the antenna gain from 51 to 58 GHz given the 2.1 cm physical aperture limitation. Simulations show that, at best, a 2.1 cm aperture will only receive about half of its energy from within the 17 degree diameter of earth disk, as viewed from GEO. This 'earth-disk efficiency' directly affects the signal to noise ratio of GeoSTAR, and must therefore be maximized. This ruled out corrugated horns, and left us with two candidate horn designs: a linear taper horn, and a variant of a Potter horn which we call the Parabolic Potter horn. These horns were fabricated and tested with the specific goal of determining the significance of scattering and mutual coupling. This was done by measuring power on the antenna range while rapidly switching dummy horns in and out of an array test jig. These tests revealed that the linear taper horns (which do not suppress the edge illumination in the E-plane) where much more sensitive to the proximity of neighboring elements at the 1 to 5% level. The Parabolic Potter horn was perturbed at the 0.1 to 0.3 percent level, which is acceptable.

The second type of error examined in the numerical simulations were additive correlator errors. These include correlator null offsets and correlator "delta-T" noise due to the finite bandwidth and integration time. The latter is the inherent radiometer error which has been well appreciated from the start. GeoSTAR will produce a new image of the earth in approximate 15 minute time slices, and this time will be fully utilized as integration time to reduce this error to an acceptable level. The errors caused by null offsets are more worrisome, however, as no amount of integration time will necessarily defeat them. These errors also become more stringent as the array size increases. Our simulations show that biases must be well below 0.002 K for the full scale spaceborne system. This is a very low bias when compared to the system noise temperature of 500 K. Our system design has therefore incorporated a number of circuits to estimate and eliminate biases. The local oscillator phase shifters are a key feature in this regard. We have also designed programmable bias controllers for the RF amplifiers of the receivers which can modulate the RF gain and noise figure by changing gate voltages among the FET amplifier stages.

Lastly, the third type of error is of gain and phase. These are multiplicative errors that scale with the magnitude of the visibility. GeoSTAR will view the earth from GEO, and the effects of gain and phase errors - our simulations have shown - are entirely dependent on the assumed brightness temperature model. The spatial spectra of the earth's temperature and the contrasts within the FOV at the continental boundaries and limb all indicate that visibility magnitude decreases as a function of distance from the UV plane origin. This implies that the gain and phase requirements will be most stringent for closely spaced antennas, and relaxed for large spacings. This helps because the larger spacings will also be more difficult to align in phase, due to the mechanical tolerances of the array. From simulations using a crude 1/f spectral models of the earth spatial temperature variability along with the actual antenna element pattern of our Parabolic Potter horn, we have determined that the spaceborne GeoSTAR will see about 10 K of visibility in only the smallest baselines, and typically less than 0.1 K in the majority of larger baselines. We have translated these results to the following requirements: Gain and phase uncertainty for small baselines should be less than 0.3% and 0.2 degrees, respectively. Phase uncertainty can then increase linearly to a maximum of 4 degrees at the largest baselines of 1 meter or more.

CONCLUSIONS

The GeoSTAR prototype construction is nearing completion. Our efforts are focused on building a practical low power system which will form the basis of future spaceborne proposals.

REFERENCES

[1] Ruf, C.S., et al, "Synthetic Thinned Aperture Radiometer Technology Developments Enabling a GPM Lightweight Rainfall Radiometer," *NASA Earth Science & Technology Conference,* Pasadena, CA, Jun 11, 2002. http://esto.nasa.gov/conferences/estc-2002/Papers/B2P1(Ruf).pdf

ACKNOWLEDGMENTS

This work was carried out at the Jet Propulsion Laboratory, California Institute of Technology under a contract with the National Aeronautics and Space Administration.