Power Actuation and Switching Module Development

Gene Wester*, Greg Carr, Frank Deligiannis, Loren Jones, Barbara Lam
Jet Propulsion Laboratory
California Institute of Technology
4800 Oak Grove Drive, Pasadena, CA 91109

Jim Sauers, Russ Haskell, Jim Mulvey
Lockheed Martin – Commercial Space Systems
100 Campus Drive, Newtown, PA 18940

The Deep Space Avionics (DSA) Project is developing a Power Actuation and Switching Module (PASM). This component enables a modular and scalable design approach for power switching applications, which can result in a wide variety of power switching architectures using this simple building block. The PASM is designed to provide most of the necessary power switching functions of spacecraft for various Deep Space missions including future missions to Mars, comets, Jupiter and its moons. It is fabricated using an ASIC process that is tolerant of high radiation.

The development includes two application specific integrated circuits (ASICs) and support circuitry all packaged using High Density Interconnect (HDI) technology. It can be operated in series or parallel with other PASMs. It can be used as a high-side or low-side switch and it can drive thruster valves, pyrotechnic devices such as NASA standard initiators, bus shunt resistors, and regular spacecraft component loads. Each PASM contains two independent switches with internal current limiting and over-current trip-off functions to protect the power subsystem from load faults. During turnon and turnoff each switch can limit the rate of current change (di/dt) to a value determined by the user. Three-way majority-voted On/Off commandability and full switch status telemetry (both analog and digital) are built into the module. This paper describes the development process used to design, model, fabricate, and test these compact and versatile power switches. Preliminary test results from prototype HDI PASM hardware are also discussed.

I. Introduction

The Deep Space Avionics (DSA) Project, formerly known as the X2000 Advanced Avionics Project, is a Jet Propulsion Laboratory (JPL) project to develop a new generation of electronic parts, modules, and boards for avionics use on future deep space missions. Such missions to deep space are challenging due to their long duration — often requiring design lifetimes greater than ten years. As an added complexity missions to Jupiter and its moons encounter an extreme radiation environment. These two challenges combine to drive research toward improving the lifetime and radiation tolerance of electronic components and parts used in power systems. Components used in state-of-the-art, low-voltage power systems generally cannot survive a radiation environment greater than 300 Krad. The DSA Project has taken the approach of developing a set of Application Specific Integrated Circuits (ASICs) as the path leading to power electronics that are compact and tolerant of higher radiation levels.

The DSA effort is leveraging off work previously sponsored by JPL, having previously teamed with Boeing (ASIC Design) and Honeywell (ASIC foundry) under the X2000 Integrated First Delivery Project to develop an analog ASIC cell library for use in future ASIC designs. By combining the analog cell library and the digital cells, JPL is developing a process for designing and producing rad-hard mixed-signal ASICs for power applications. This challenging process is currently being proven under the sponsorship of the proposed Jupiter Icy Moons Orbiter (JIMO) Project. JIMO is an ambitious mission proposed to orbit three planet-sized moons of Jupiter (Callisto-

* Senior Engineer, Power Electronics Engineering, M.S. 303-310

Ganymede-Europa) to investigate their composition, history, and life-sustaining potential. Although the ASIC development process is challenging, the benefits can be reaped for multiple missions. Using mixed-signal ASICs for power-system design can reduce the number of components necessary for a system. With components that are inherently radiation tolerant, less shielding is required and higher reliability is achieved, resulting in a reduction of mass and volume — the universal goal of spacecraft designers.

The power subsystem components being developed are specifically for low-voltage (30V) power management and distribution in deep space missions. All avionics boards and modules are designed for use in either centralized or distributed spacecraft architectures. A combination of these boards can be used for switching most types of avionic loads, for firing pyrotechnic devices, and for actuating valves. All ASICs are inherently rad-hard as a result of using the Honeywell fabrication process. The electronic components being designed include five ASICs (High-side Switch Control, Low-side Switch Control, Analog Interface, Command Interface, and Pulse-Width-Modulator), one Power Actuation and Switching Module (PASM), and two boards/slices (Power Switch, and Power Control). This paper builds upon previous work[1] and describes recent PASM developments. Companion papers[2-4] describe the power system concept, the Command Interface and Analog Interface ASIC chipset, and the PWM ASIC.

II. PASM Description

The PASM is a general-purpose, solid-state switch module. It provides current limit and trip capability, and current and voltage telemetry. It provides soft start of capacitive loads, and permits clamped reverse-voltage turnoff of inductive loads. Figure 1 shows the PASM block diagram. Each PASM has two independent identical isolated solid-state switches that can be connected to the load in a variety of series, parallel, or bi-directional configurations. Figure 2 shows that a PASM switch can be connected in either the supply line (high-side) or return line (low-side), relative to the load. PASM switches provide a great deal of flexibility in system architecture.

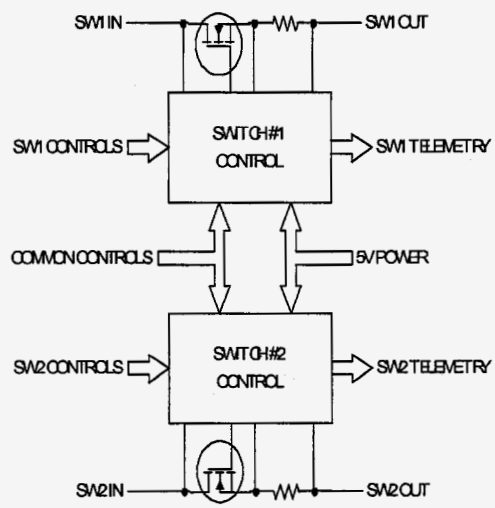

Figure 1. PASM Block Diagram.

The PASM can replace most fuses and relays, resulting in greater system reliability. If current exceeds the trip value for about 20 ms, the PASM switch gracefully turns off the load within 31 ms. Fault (or overload) current is actively limited to a maximum of 6.5 A within 100 μs. The nominal current trip and limit capability of each PASM switch is 3.7 A and 5.75 A respectively. By simply jumping two pins, the user can select a set of lower current trip and limit values; namely, 1.5 A and 2.25 A, respectively. Once tripped a switch latches off until it is reset by either recycling the ASIC power or by commanding the switch OFF and then ON again. In addition telemetry of the overload trip status is available.

PASM switches are designed to limit inrush current during turnon, and to limit inductive kickback voltage during turnoff. The rate of current change, di/dt, is actively controlled at a nominal value of 7.5 A/ms during turnon and turnoff. Inductive kickback voltage during turnoff is limited by passive components that operate the MOSFET switch as a power Zener, thus dissipating the transient energy in a device that is rated to handle power.

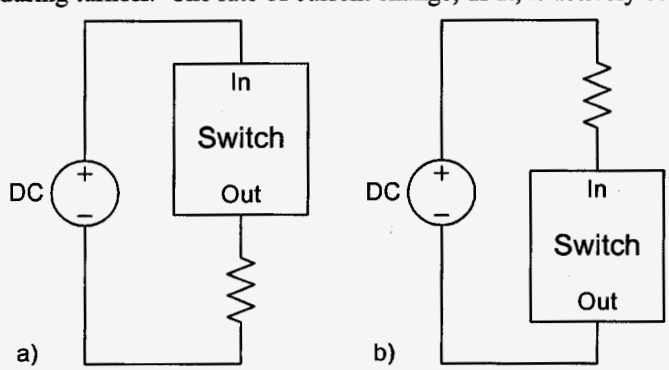

Figure 2. PASM switches can be connected as either (a) High-Side, or (b) Low-Side, relative to the load.

Each MOSFET switch in a PASM is controlled by a pair of Switch Control ASICs (SCAs), as shown in the block diagram of Fig. 3. The Low-Side SCA receives commands, a clock, and housekeeping power, and it transmits telemetry; so it is referenced to the power-system ground. The High-Side SCA monitors and limits switch current, so it floats with the switch and is referenced to the switch output voltage, which can be up to 40 V above power-system ground. Two separate ASICs

are necessary because the Silicon On Insulator (SOI) breakdown voltage is inadequate to provide the required voltage level shifting in a single ASIC.

III. Design Approach

The chipset is powered by redundant 5 V power supplies that feed the Low-Side SCA. Foldback current limiting in the Low-Side SCA protects the power supplies from ASIC faults or overloads. Power-on-Reset (POR) circuitry was designed to keep the circuit in a known state during initial power-on and in the event of power loss. On-chip voltage references are provided in both ASICs. The chipset provides analog telemetry of switch current and voltage. Logic command inputs are compatible with both 3.3 V and 5.0 V standard CMOS logic. Currently the chipset is designed to drive a 100 V MOSFET for use in most lower-voltage applications. However, with adequate isolation between the interfaces of the two chips it can be used also in higher voltage applications.

Bias power for the High-Side SCA is developed from the Low-Side SCA. After consideration of alternative approaches, a two-phase charge pump was selected for powering the High-Side SCA. It is low-profile, reasonably efficient, and is implemented on-chip with the exception of two small chip capacitors. The charge pump supplies a full-bridge synchronous rectifier, in parallel with a voltage tripler, in the High-Side SCA to produce 5 V and 12 V bias power.

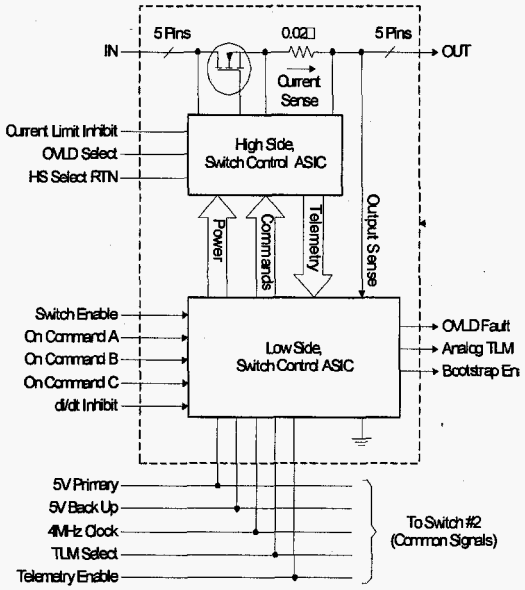

Figure 3. Switch Block Diagram.

A novel low-power interface technique was developed to couple commands and telemetry between the Low- and High-Side SCAs. This interface scheme uses series capacitors to couple clock signals from the sending side to the receiving side of the interface. These capacitors are built into the ASICs using interconnected metal layers to form parallel plates. There are two channels for each command and status signal; the clock is gated into one channel for Logic High and to the other channel for Logic Low.

PASM analog telemetry is controlled by two digital commands. One command selects either switch current or switch voltage; the other either enables or inhibits output of PASM analog telemetry.

For telemetry of switch current, which is sensed in the High-Side SCA and telemetered in the Low-Side SCA, a pulse-position scheme was developed. When a periodic ramp signal crosses the switch-current sense signal, a pulse is transmitted through a series coupling capacitor from High-Side SCA to Low-Side SCA, which triggers a circuit to sample and hold the value of a slave ramp signal in the Low-Side SCA. The sampled and held value of switch current is buffered and fed to the telemetry output multiplexer.

For telemetry of switch output voltage, the voltage is fed directly to the Low-Side SCA, where it is scaled, buffered, and fed to the other input of the telemetry output multiplexer.

IV. Performance Specifications

V. Physical Description

JPL's industry partner, Lockheed Martin – Commercial Space Systems (Newtown, PA), is designing the PASM. The PASM package design is based on a new Power High-Density Interconnect (Power HDI) technique developed by General Electric. As shown in Fig. 4, the HDI cross-section looks somewhat like a multilayer PCB, but it has smaller dimensions, which translates to higher power density and enhanced high-frequency performance. Discrete components can be placed on top or mounted in recessed cavities within the substrate, much like parts can be mounted on both sides of a PCB.

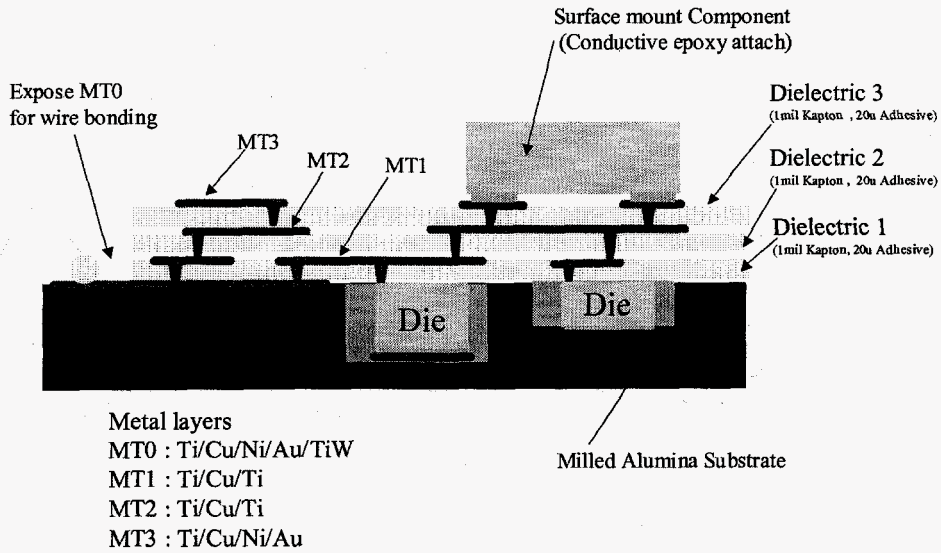

Figure 4. Symbolic PASM cross-section, showing High-Density-Interconnect construction.

Figure 5 shows the PASM in a packaged HDI assembly. Each half contains one switch, including the MOSFET, its associated SCA chipset, and other related components. The layout of one switch was designed, and then copied and simply rotated around the vertical centerline for the other switch.

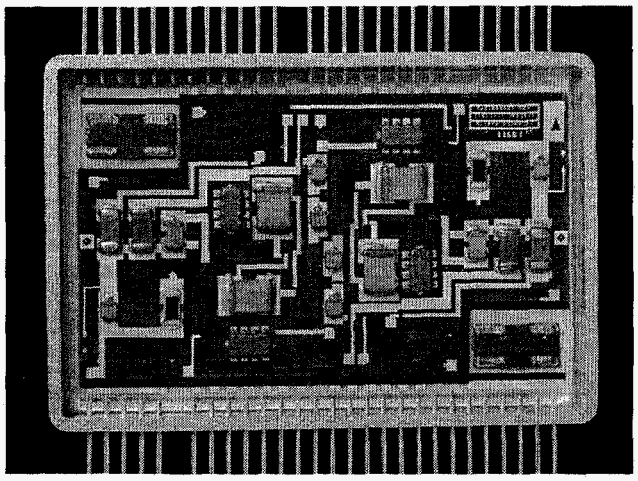

Figure 5. PASM in HDI package.

VI. Test Results

The SCA chipset is fabricated on the Honeywell HX2000 foundry and the first ASICs were completed in June 2003. Some of these ASICs were packaged as discrete parts to facilitate breadboard testing. Based on successful results from the ASIC tests, several PASM modules were built and tested. <SHOW REPRESENTATIVE TEST RESULTS>

VII. Summary

Development of the PASM switch module for power distribution functions in space environments has been described. Each PASM contains two independent switches, along with custom mixed-signal Switch Control ASICs and a few discrete support components. This compact and versatile component can switch low- or high-side loads. It can control current inrush during turnon, and limit voltage during turnoff. It continuously monitors load current, and it will automatically disconnect overloads and faults that persist for 20 ms, while limiting current in the interim. Those features provide PASM switches with the capability to fire pyrotechnic initiators, control propulsion valves, and distribute power to spacecraft loads.

The PASM is designed for flexibility, and can be configured using jumper connections to select reduced current trip and limit levels, or even to inhibit current limit. It has three majority-voted ON/OFF command inputs. Additional inputs for configuration and operation include signals to select telemetry options and to disable the switch in safety-critical applications (e.g., pyrotechnic initiation) until appropriate arming and firing conditions are met. Telemetry outputs include overload status and analog switch voltage and current. The PASM is expected to find application in a wide variety of upcoming space exploration missions.

Acknowledgments

The research described in this paper was carried out at the Jet Propulsion Laboratory, California Institute of Technology, under a contract with the National Aeronautics and Space Administration.

References

[1]Carr, G., "Solid State Power Switching for NASA's Deep Space Missions," 1st *AIAA International Energy Conversion Engineering Conference*, 2003, Paper Number: AIAA-2003-5978.

[2]Jones, L., Carr, G., Deligiannis, F., Lam, B., and Wester, G. "New Generation Power System for Space Applications," *2nd AIAA International Energy Conversion Engineering Conference*, Providence RI, 16-19 Aug 2004, Paper Number: AIAA-2004-5538.

[3]Ruiz, I., "Open-Systems Architecture of a Standardized Command Interface Chip-Set for Spacecraft Power Switching and Control," *2nd AIAA International Energy Conversion Engineering Conference*, Providence RI, 16-19 Aug 2004, Paper Number: AIAA-2004-5691.

[4]Carr, G., Wester, G., Lam, B., Bennett, J., Franco, L., and Woo, E., "The Pulse-Width-Modulator ASIC Development for Deep Space Missions," *2nd AIAA International Energy Conversion Engineering Conference*, Providence RI, 16-19 Aug 2004, Paper Number: AIAA-2004-5694.