Control of Systems with Tiered Actuators with Application to Interferometer Optical Delay Line Control

B. J. Lurie*, F. Y. Hadaegh**
Jet Propulsion Laboratory

Abstract: High accuracy feedback control systems might employ tiers of actuators with different properties. Such systems' performance can be estimated in advance using Bode integrals. The systems can be made globally stable with good transient responses and close to the best possible disturbance rejection when controllers include high-order linear links and multiple nonlinear dynamic links. The design approach is exemplified by designing control system for an interferometer optical delay line.

1. Introduction: composite actuators

Progress in the resolution of scientific instruments advanced at a faster pace than the accuracy improvements of pointing actuators (motors and thrusters). As the result, perfection of instrument attitude control systems becomes critical.

Increasingly more often, actuators possessing all the desired properties happen to be too expensive or even not feasible. This difficulty is being avoided by using composite actuators, built of several tiers of elementary actuators, as shown in Fig. 1, where C_i is a compensator, A_i , an actuator, LP_i , a low pass filter limiting the operational bandwidth, P, the plant, and B, the feedback path. In such a composite actuator, each additional tier contains an actuator with much wider bandwidth that typically allows increasing the control system resolution, speed, and accuracy by 2 to 4 orders of amplitude, but with a saturation threshold lower by several orders of magnitude. The assembly of the actuators in tiers is essentially nonlinear and as such, limits the choice of the methods for system analysis and controller synthesis.

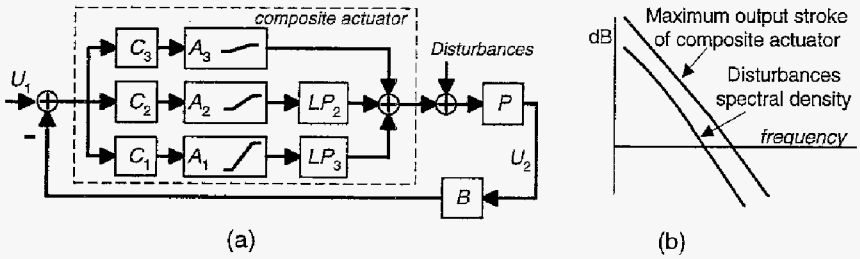

Fig. 1 (a) SISO control system with a triple-tier actuator, (b) disturbances profile

The composite actuator possesses both high resolution and high output power – however the latter only for the lower frequency components of the signal. Using such an actuator makes sense when the disturbance spectral density drops rapidly with frequency. Fortunately, this is the case in most practical situations, and multitier actuator control systems found wide range of applications. However, the methodology of systematic design of such high-performance systems (systems using high-order controllers that incorporate dynamic nonlinear links) is not yet well developed.

---

*. Senior Engineer

** Senior Research Scientist, Guidance and Control Group Manager

This paper will discuss the analysis and synthesis of high-performance high-order nonlinear control systems with multitier actuation.

2. Design optimality

Following Webster's collegial dictionary, we accept the definition of optimality as that which leads to best customer satisfaction. We cannot limit the optimality meaning to only maximizing some simple norm applicable to an unrealistically simplified system (even if the system is excessively generalized in some other aspects, e.g. a linear multi-variable control system, a system where the only nonlinearities are kinematical, a plant without high-frequency gain uncertainty, a model of a cow as a ball with n horns, or even a system where causality is not preserved [2, pp 95; or online in 3, Ch.4]).

The optimality criterion for a control system that employs a single actuator for each direction of motion must address suppression of the disturbances and the effects of plant parameter variations, sensor noise, the size and cost of the parts, and the duration and the cost of the system design. An additional requirement for systems with tiered actuators relates to the compromise between rejection of large disturbances and attenuation of small disturbances in the linear state of operation.

It is the authors' experience that opinions of skilled engineers (customers) converge surprisingly rapidly to a consensus once the trade options and relative costs become transparent. This is why providing transparent trades for customers is imperative for the success of the project development. This transparency is readily achieved by using evaluation criteria based on Bode integrals.

3. Bode integral relations

We know from the theory and experience that even when the plant is linear and low order, high quality control requires high-order compensators to well approximate the optimal frequency responses, which are transcendental. Further, multiple nonlinear elements must be included for global stability and good transient responses. Controller design must address the trade-offs between performance in different regimes of operation (acquisition, tracking, repositioning, large and small error amplitudes) and under many tight practical constrains.

For multitier-actuator systems, employing Bode integrals for estimation of the system performance during the system trades and employing nonlinear dynamic compensators (NDC) yield even more benefits than that in application to single-actuator systems as described in [1,2], and streamline the design process.

The Bode integral relations conveniently serve as (a) a performance estimate of a system to be designed and (b) tools for resolving the design trade-offs, sorting out the design options, and speeding up the design iterations.

The integral relations of the most use are the following:

1. *gain-phase relation* for minimum phase lag transfer function: The phase shift is an integral of weighted slope of the gain response over the entire frequency range.

2. *integral of feedback*: The integral of feedback in dB over linear frequency scale is 0, and, therefore, area of negative feedback equals the area of positive feedback.

3. *integral of phase*: The available lower frequency loop gain is proportional to the integral of the loop phase lag.

It is also convenient to use:

4. *ideal Bode cut of*: A loop shape that is optimal for a formalized control problem

and is applicable (close to optimal) for many practical control problems, and

5. criterion for *Parallel connection of two minimum phase paths to be minimum phase*: A system having loop transfer function equal to the ratio of the paths transfer functions must be stable.

Applications of Bode integrals hasten the tasks of achieving a consensus of optimality and resolving trades in the linear parts of the system. Once these are achieved, controller responses can be properly shaped using high order transfer functions.

4. Design Options

Four major **configurations** for a double-tier feedback system (the first tier A_1 is main, or coarse, the second, vernier) are exemplified in Fig. 2. These options are:

A. Parallel, no nonlinear dynamic compensators (NDCs),
B. Parallel with NDCs in the main or in both channels,
C. Parallel with a common NDC (maybe, in addition to NDCs in the individual channels),
D. Main actuator following the vernier in cascade connection, without or with NDCs.

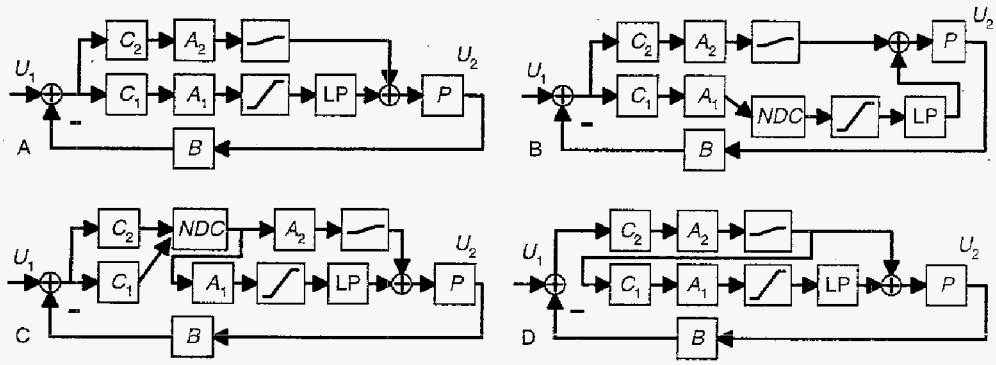

Fig. 2 Double-tier (main-vernier) actuator control configurations

From the point of view of **stability provision** and the value of the **achievable feedback**, several design options for the double-tier parallel channel feedback system design are as follows:

1. The system (A) is designed as globally stable (GS) by making each loop to be stand-alone (SA) absolutely stable (AS) [2]. In this case, however, the achievable feedback is smaller than that available using other options.
2. The system (A) is designed as conditionally stable (CS) and includes SA AS vernier loop and SA unstable main loop. The achievable feedback in this case is much larger that in option 1. The system can be used for scientific studies in labs, but is not reliable enough for mass production or applications in space instruments.
3. With SA AS vernier loop and unstable SA main loop (same as in previous option), the system A is GS provided there3 is an NDC in the main channel, for example, using exact linearization scheme [2,4]. Such a system, with the addition of other NDC that provides good transient responses for large amplitude signals, is quite reliable and easy to use.

4. With SA GS vernier loop and SA unstable main loop (same as in previous option), the vernier loop is made bandpass and Nyquist-stable to further increase the feedback in the vernier loop closer to the limit expressed by the Bode integrals. The vernier loop is made SA GS by application of an NDC in this loop. An additional NDC placed in the common path of the two loops assures GS of the entire system and allows higher amplitudes of the disturbances to be rejected.

In a multitier system, relations between the adjacent tiers can be any of these double-tier options, and the relations need not be the same for all the tiers' junctions (e.g.,.

Also, the loop gain responses can be low-pass or band-pass. In the case of band-pass responses, better performance can be achieved (since the area of Bode feedback integral is not wasted at lower frequencies where there is no need for it), but the loop shaping needs to be more complex which might lengthen the design process.

5. Triple-tier control of optical delay line (ODL)

5.1. ODL

In the following, we describe control a triple-tier actuator ODL that employs configurations C and D and stability provision option 4, and is an improvement over the previous designs of the ODL, versions of which have been reported in [2, 4, and 5].

Light from two light collectors of a spacecraft stellar interferometer is directed to the focal plane [4]. In one of the paths a variable optical delay line (ODL) is introduced to assure the two light beams interfere in phase, forming proper fringes. The ODL has two movable mirrors as shown in Fig. 3. It has three tiers of actuators: motor, voice coil VC, and piezoelectric actuator PZT. The PZT has the widest control bandwidth but the smallest stroke.

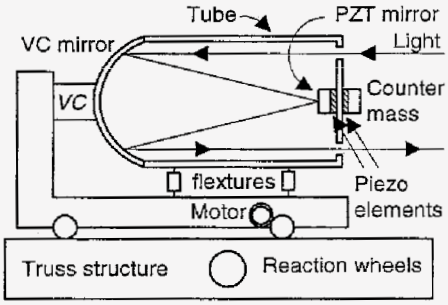

Fig. 3 Optical delay line (ODL)

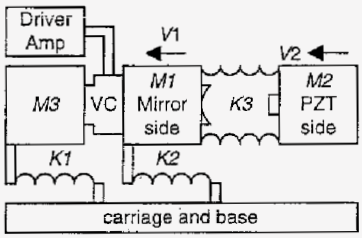

Fig. 4 Mechanical diagram for the ODL

A simplified diagram for the motion in the longitudinal direction is shown in Fig. 4. Here, *M3* is the mass of the VC, *M1* and *M2* reflect the masses of the front and rear parts of the tube, *K1* is the stiffness coefficient of the VC mounting cantilever, *K2* is the stiffness coefficient of the suspension flexure, and *K3* is the tube longitudinal stiffness coefficient. The total mass to move by the VC is $M1+M2 = 2$ kg.

From the model of the system dynamics the VC loop transfer function, the effect of the output impedance of the driver amplifier on this transfer function, and the effect of the amplifier output impedance on the base can be found.

The bandwidth of the main (VC) loop is severely limited by the plant dynamics. The simplified VC current-to-large mirror (M1) position transfer function (VC plant) is

$$k\frac{0.5s}{s^2+1.5s+500}\times\frac{2.2s^2+440s+22E6}{s^2+500s+22E6}\times\frac{1}{s};$$

here

VC electromechanical constant $k = 1.17$N/A;

first ratio represents the velocity to force ratio of the flexture resonance at $\omega_0 = 22$ rad/sec with $\zeta = 0.035$, so that $2\zeta\omega_0 = 1.5$;

polynomial $2.2s^2+440s + 22E6$ reflects the tube resonance (breathing mode); the polynomial $s^2+500s + 22E6$ reflects the VC mount cantilever resonance;

integrator output is the mirror axial displacement relative to the carriage.

The VC stroke-to-voltage responses are shown in Fig. 5. The suspension resonance can be damped, as shown, with the help of rate feedback.

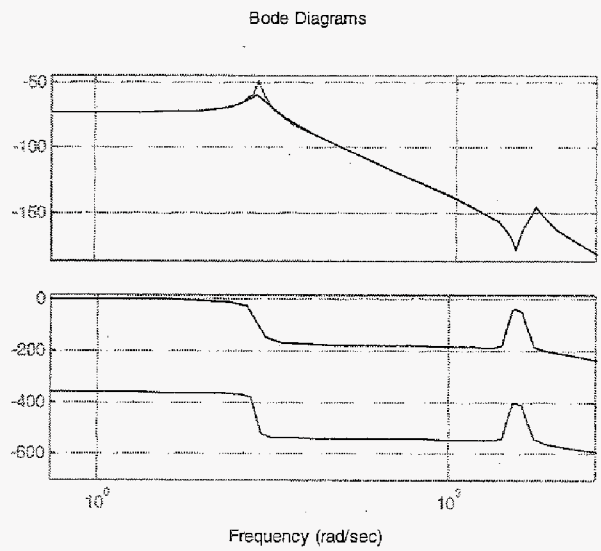

Fig. 5 VC plant frequency response, with the voltage driver and with the back emf path disconnected – practically coinciding, and with 100 times increased gain in back emf path.

The force-to-PZT mirror position transfer function at frequencies below 400 Hz is nearly constant. At frequencies close to the breathing mode of the tube this transfer function is expressed approximately as

$$\frac{0.5}{s}\times\frac{2.2s^2+440s+22E6}{s^2+500s+22E6}\times\frac{1}{s};$$

5.2. ODL control options

The simplest ODL control design might use absolutely stable stand-alone loops, option 1. However, the feedback in this case is insufficient for the required disturbance rejection. The design using option 2 and described in [6] provided sufficient feedback but the system was only conditionally stable which is not suitable for space system application.

The ODL control design using option 3 and described in [2, 4, 5] yielded a system with large feedback which is globally stable, a substantial improvement over [6]. Still,

the system was not yet optimized in view of Bode integral criteria, and, therefore, left open the following potentials for further performance improvement:

1. PZT loop was low pass, wasting a part of a Bode feedback integral. The potential of improving by making the system bandpass can be calculated with Bode phase integral.
2. PZT loop was of absolutely stable type (without an NDC) although this is not required for the provision of global stability of the entire system. The improvement potential of making the loop Nyquist stable can be calculated with Bode phase integral.
3. NDC was single stage. Double-stage NDC allows improvement of large amplitude disturbance rejection and transient responses to large commands.

5.3. PZT loop

The PZT loop bandwidth is limited by the microprocessor sampling rate. The designed response includes a Bode step and is band-pass, therefore allowing larger feedback at frequencies of interest. The loop is also Nyquist-stable, which allows for larger feedback. The loop is stand-alone globally stable as the result of using a NDC.

The maximum stroke of the PZT actuator is 10 μm. The plant transfer function for the PZT (which is a velocity source) is close to 1. The PZT loop bandwidth is limited by the sampling rate of 5 kHz that produces sampling delay (a half period of the sampling signal) of 0.1 msec. Even when adding the calculation time, the delay is less than 0.12 msec. To provide an extra margin, a delay of 0.17msec is introduced in the analog block diagram by a link with transfer function (-s+12e3)/(s+12e3).

The PZT loop was designed in [1,2] as a low-pass response with a Bode step with crossover frequency of 600 Hz. However, there is no need for large low-frequency gain in this loop. In this sense, the design in [1,2] is not optimal, and it can be improved by making the PZT loop band-pass. Also, this loop response is worth making Nyquist-stable, in order to increase the feedback. The chosen response is shown in Fig. 6.

5.4. VC control bandwidth limitations and VC loop

The maximum achievable frequency at which the loop gain in the VC loop equals the loop gain in the PZT loop, denoted as f_{vcpzt} , is limited by the condition that at all frequencies higher than f_{vcpzt}, the maximum output of the VC (displacement or velocity) should be less than the similar output of the PZT loop.

In addition, the frequency f_{vcpzt} is limited by both the VC loop digital delay (of the sensor and digitizing) so that at f_{vcpzt} the phase difference between the loops doesn't exceed 150°, and by requiring at least 20 dB lesser VC loop gain than the PZT loop gain at the frequency of the structural resonance peak (pole). This requirement limits the realizable crossover frequency to be below 20 Hz.

The VC loop sampling frequency is f_{vc} = 1000 Hz. The corresponding delay plus 1 sample period of waiting is therefore 3 msec. This delay can be approximated by the function (-s+660)/(s+660). This delay limits the frequency f_{vcpzt} to less than 40 Hz.

The structural resonances at higher frequencies require a sharp cutoff at higher frequencies. Special shaping is necessary in the range close to f_{vcpzt}. At the lower frequencies the loop gain should be maximized, i.e., the slope of the Bode diagram must be steep. At very low frequencies, the slope should not differ more than by 10 dB/oct

from the slope of the carriage motor control loop, so that the total loop transfer function is minimum phase.

5.5. Bode diagrams

The VC loop is low-pass and SA unstable. Together, the VC and PZT loops are Nyquist-stable (for larger feedback) and the parallel connection is made globally stable by NDCs. The Bode diagrams for PZT and VC+PZT loops are shown in Fig. 6.

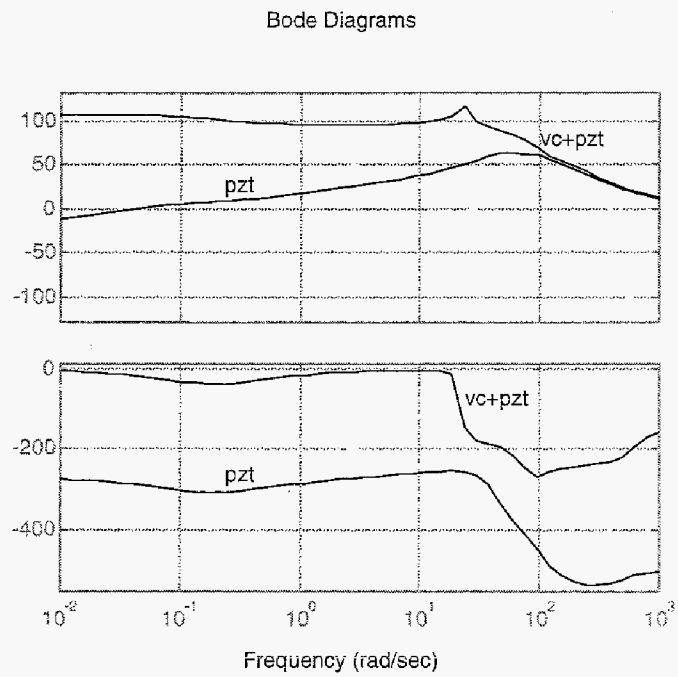

Fig. 6 Stand-alone and combined feedback loops' Bode diagrams

5.6. Motor loop

The motor moving the carriage via a gearbox is driven by a voltage amplifier, which allows for some reduction of the effects of friction. The maximum rate of the carriage is 1 mm/sec. The analog velocity feedback is implemented over the bandwidth of 40 Hz.

The transfer function for the motor with the amplifier is $500/[(s+10)s]$ m/V.

5.7. Block diagram

The Simulink block diagram for the three tiers is shown in Fig. 7. The sampling frequencies are 5000 Hz for the PZT loop, 1000 Hz for the VC loop, and 100 Hz for the motor loop. Nonlinear dynamic compensators NDC1 and NDC2 provide global stability and good transient responses for large step signals.

The motor analog compensator is incorporated into the motor drive electronics.

The pathlength and the pathlength components transient responses for a 3 mm step

command are shown in Fig. 8. Notice that the sinusoidal oscillation is the result of 10 Hz disturbance generator in the block-diagram.

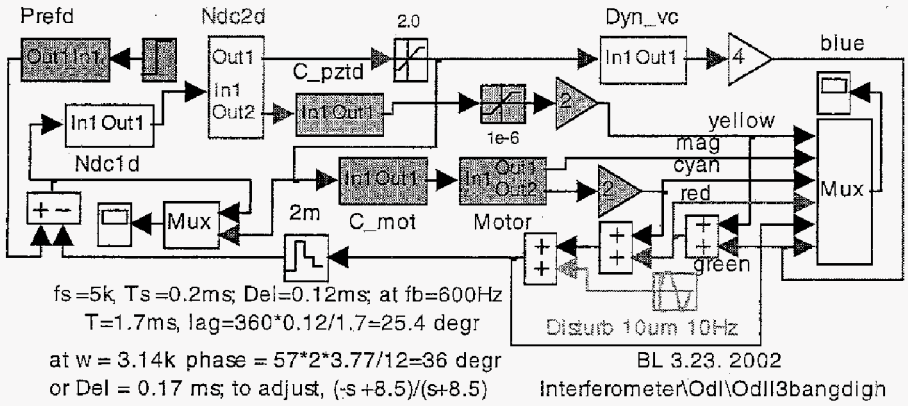

Fig. 7 Block diagram

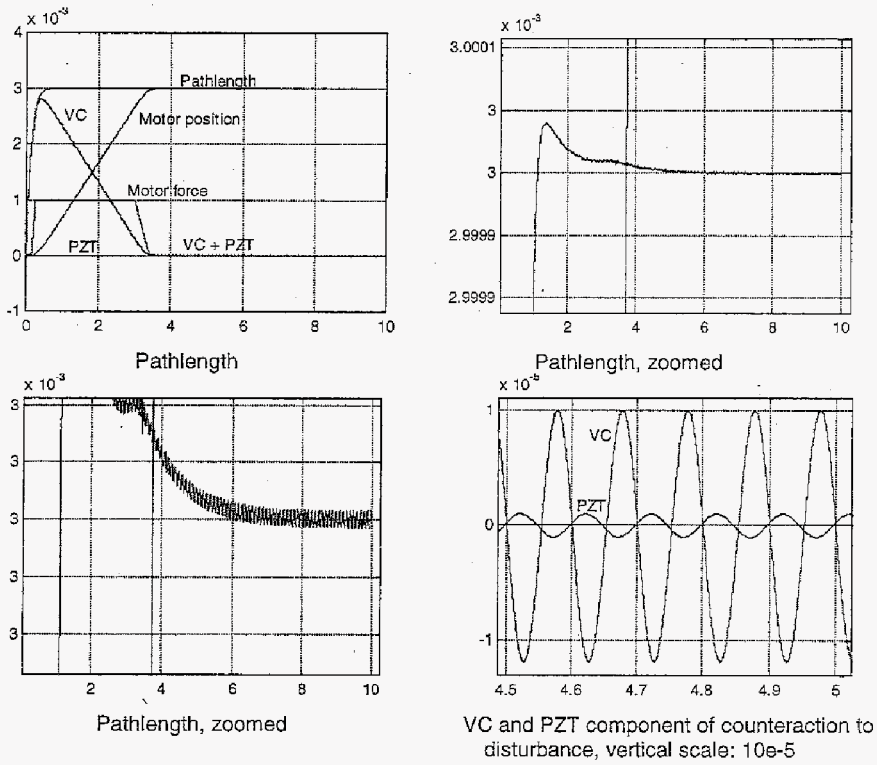

Fig. 8 Transient responses of the path length and its components to 3 mm step command in presence of sinusoidal disturbance

6. Power supply controller and laser frequency control

Other multitier actuator systems designed by the authors with a similar methodology are the triple-tier actuator power supply for a klystron radar [2,7] using as actuators a motor-generator (tier 1), magnetic amplifier, and semiconductor switching amplifier, and double-tier frequency control for a laser in an atomic clock shown in Fig. 9. The laser frequency is varied by a piezoelement-moving grate of external cavity. The bandwidth is limited by the mechanical modes starting with frequencies of several kHz. The second tier actuation is varying the laser current within a small range. The resulting frequency changes are rather small, but feedback in this loop can be much wider, up to 50 kHz, and is limited by the dithering frequency of 500 kHz that is used to lock the laser frequency to a quantum transition mode of Ce atoms. The system uses configuration D and stability provision option 3.

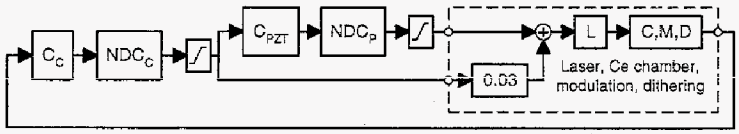

Fig. 9 Double-tier laser frequency control

6 Conclusion

The multi-tier Bode-based design methodology was applied successfully to several multitier actuator system designs. It uses globally stable Nyquist stable systems for increasing feedback and disturbance rejection. The achievable performance was calculated in advance to make accurate system trades. The employed NDCs grant global stability and good transient responses for various signal levels. The control systems are reasonably simple to implement and provide good disturbance rejection.

Acknowledgment. The research was carried out by the Jet Propulsion Laboratory, California Institute of Technology, under a contract with the National Aeronautic and Space Administration. The authors are grateful to Drs. D. Bayard and D. Scharf for helpful suggestions.

References

1. B. J. Lurie, A. Ghavimi, F.Y. Hadaegh and E. Mettler, System Trades with Bode Step Control Design. AIAA Conf. on Guidance, Navigation and Control, Boston, 1998.

2. B. J. Lurie, P. J. Enright, *Classical Feedback Control*, Marcel Dekker, NY: 2000. Chapter 4 is available online in [1]. Russian translation is being prepared by ODF.

3. B. J. Lurie, 2000, URL <luriecontrol.com>.

4. B. J. Lurie, J .J. Hench, and F. Y. Hadaegh, "Nonlinear control of the optical delay line pathlength," SPIE, vol.3692, pp.139-149, Orlando, Florida.

5. J. J. Hench, B. J. Lurie, R. Grogan, R. Johnson. Implementation of nonlinear control laws for the RICST optical delay line. IEEE Aerospace Conference, March 2000, Big Sky, Montana.3.

6. J. T. Spanos and M. C. O'Neal. Nanometer level optical control of the JPL phase B testbed. ADPA/AIAA/ASME/SPIE Conf. on Active Materials and Adaptive Structures, 1992.

7. B. J. Lurie, J. Daegas, An Improved High-Voltage DC Regulator for a Radar and communication Transmitter. "Proc. 18th Power Modulator Symposium", Hilton-Head, 1988.