MIRO Calibration Switch Mechanism

Jason Suchman
Staff Engineer, Advanced Mechanical Systems, Jet Propulsion Laboratory
Tel: (818) 354-3651 Fax: (818) 393-4860 Jason.J.Suchman@jpl.nasa.gov

Yuki Salinas
Project Element Manager, MIRO Mechanical Systems, Jet Propulsion Laboratory
Tel: (818) 354-3651 Fax: (818) 393-1324 Yuki.Salinas@jpl.nasa.gov

Holly Kubo
Former Staff Engineer, Structure & Configuration Engineering, Jet Propulsion Laboratory
fourkubos@earthlink.net

Abstract

The Jet Propulsion Laboratory has design, analyzed, built, and tested a calibration switch mechanism for the MIRO instrument on the ROSETTA spacecraft. MIRO is the Microwave Instrument for the Rosetta Orbiter; this instrument hopes to investigate the origin of the solar system by studying the origin of comets. Specifically, the instrument will be the first to use submillimeter and millimeter wave heterodyne receivers to remotely examine the P-54 Wirtanen comet. In order to calibrate the instrument, it needs to view a hot and cold target. The purpose of the mechanism is to divert the instrument's field of view from the hot target, to the cold target, and then back into space. This cycle is to be repeated every 30 minutes for the duration of the 1.5 year mission.

The paper hopes to explain the development of the mechanism, as well as analysis and testing techniques.

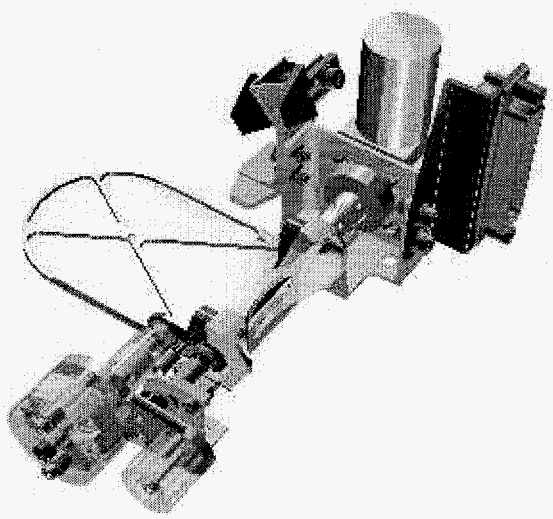

Figure 1. CAD Model of the MIRO Calibration Switch Mechanism

This work was performed at the Jet Propulsion Laboratory, California Institute of Technology, under a contract with the National Aeronautics and Space Administration. Reference herein to any specific commercial product, process or service by trade name, trademark, manufacturer, or otherwise does not constitute or imply its endorsement by the United States Government or the Jet Propulsion Laboratory.

Design

The design features a stepper motor with planetary gearhead manufactured by CDA Intercorp. The power is transmitted from the output shaft of the gearhead to a flex coupling made by Helical Products Company, Inc. The flex coupling is pinned to both the gearmotor's output shaft and a shaft that runs across the mechanism to a bracket which holds a counterweight and the SMA pinpuller by TiNi Aerospace, Inc. The pin of the SMA pinpuller engaged the side of the mirror, which is held in place by Vespel® SP-3 journal bearings on the transverse shaft described above. Vespel® SP-3 is a low-friction polyimide manufactured by the DuPont Corporation. The mirror is under a moment due to a torsion spring that, when the SMA Pinpuller is actuated, slams the mirror down towards the bracket and against a Vespel® SP-3 hardstop. The off-axis mass of the mirror is addressed by the mirror counterweight. All counterweights are manufactured from tungsten class 4 (MIL-T-21014) to provide a high density material to minimize volume which would adversely affect the configuration. Feedback to the MIRO computer is provided by three Infra-red reflective object sensors which provide information as to the position of the mechanism. Upon testing of the instrument we found that using these sensors in this configuration was troublesome, and the paper will address this issue as well as what the correct implementation should be. The diagram below shows a 25 pin connector; however, this connector was removed due to mass considerations, and a pigtail design was adopted.

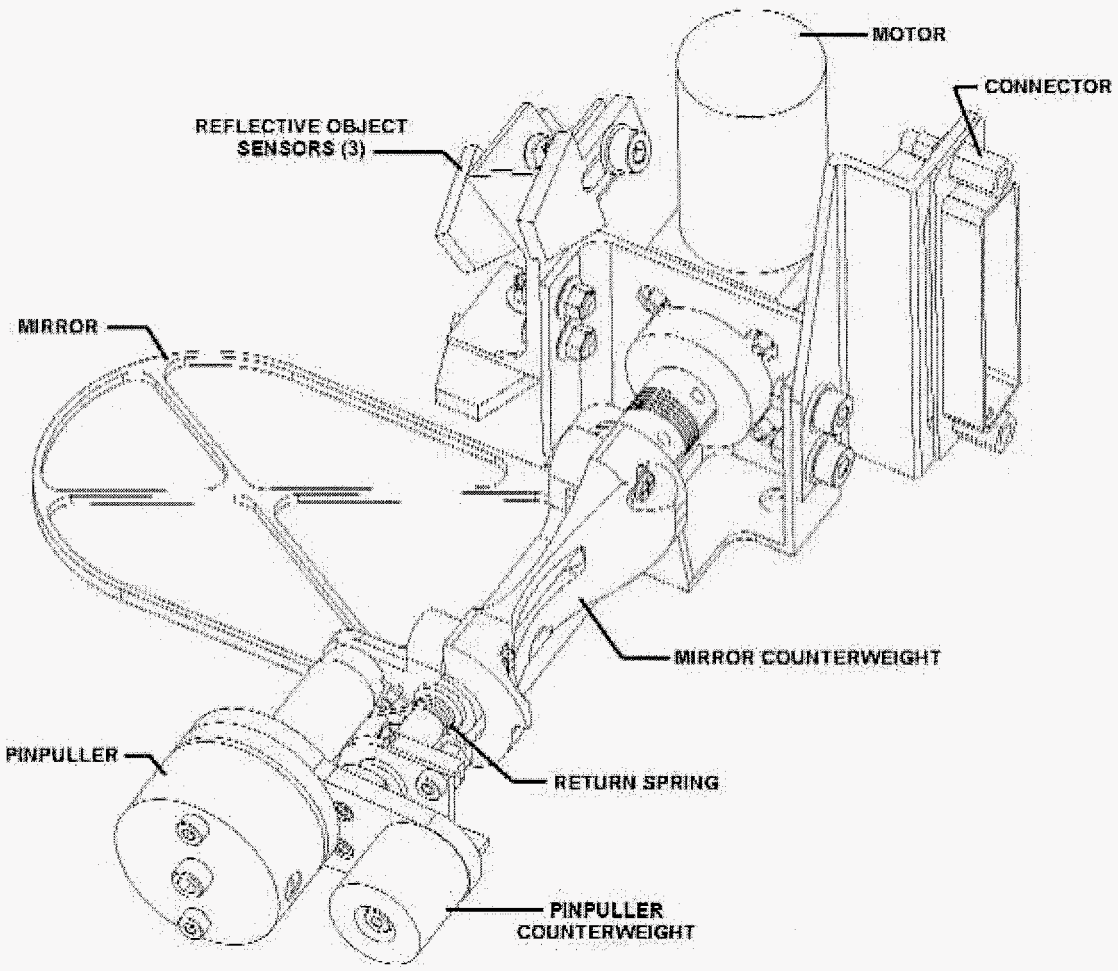

Figure 2. Overall Configuration of the MIRO Calibration Switch Mechanism

One complexity of the system was its need for a repeatable failsafe device. A shape memory alloy (SMA) pinpuller, developed through a partnership between TiNi Aerospace, Inc. and JPL, was chosen to perform this function. The pinpuller features a primary and a redundant circuit to provide added reliability. The device is good for smaller applications where a small stroke and a small pull force is adequate. Another consideration in selecting this device was its cleanliness. A great deal of high precision instruments are in very close proximity to the mechanism, so outgassing of materials and lubricants is of great concern (TML < 1%, CVCM < 0.1%).

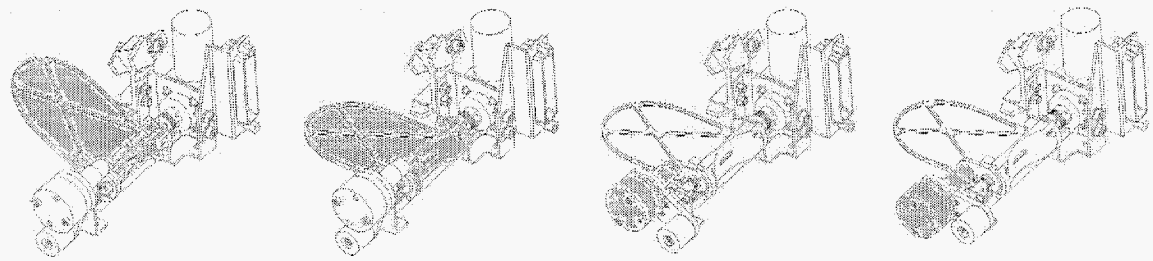

The Pinpuller is activated, allowing the mirror (shaded gray) to rotate independently. The pinpuller is pushed against a hard stop on the bracket as the mirror is pushed toward the safe position by the return spring.

The Mirror is rotated against the RTV stop (on the far side of the mirror) in the safe position. The return spring will keep the mirror in this position indefinitely.

The Fail-safe Mechanism is reset by driving the pinpuller around until it can re-engage the mirror in the safe position. During the reset cycle the motor must overcome the torque of the return spring and the friction at the pinpuller/mirror interface caused by the pinpuller pin extension spring. The mirror lip is angled to allow the pinpuller to engage the mirror more easily.

The Pinpuller is fully reset and the Calibration Switch is fully operational.

The Pinpuller is reset in the event that the pinpuller is dislodged from the mirror during launch, or if the motor begins to operate again after the Failsafe has been activated.

Figure 3. Sequence of operations for pinpuller failsafe actuation and reset

Testing

Testing of the device included acceptance testing of the externally provided components as well as qualification testing of the completed mechanism. The environment includes temperatures of -30 to 60°C (operating) and -40 to 70°C (non-operating). The dynamic environment included Sine Vibration (all axes) 5.0 Hz to 21 Hz = ± 7.5 mm (0 to peak), 21 Hz to 60 Hz = 13,5 g, 60 Hz to 100 Hz = 4.0 g as well as Random Vibration (all axes) 20 Hz to 100Hz = +3 dB/Oct, 100 Hz to 300 Hz = 0.05, $(M+20)/(M+1)*g^2/Hz$, 300 Hz to 2000Hz = -5 dB/Oct. The vast majority of the environmental testing was performed at the MIRO instrument level.

The life testing of the device was performed as well. The life test cycles was caclulated by adding two times the number of flight cycles plus four times the anticipated ground test cycles, which resulted in 52,790 cycles. The life test ended after over 250,000 cycles, far in excess of the requirement. However inspection of the test setup showed that the failed component was the motor driver electronics, a Ground Support Equipment (GSE) non-flight component that simulated the flight electronics. Upon further inspection of the test setup, it was noted that these electronics, as well as the mechanism itself, were bolted to a plexiglass base (we thought it looked nice!). Unfortunately plexiglass can accumulate a static

charge fairly easily, but as it is not a good conductor it has difficulty getting rid of this charge through grounding. Therefore we feel that this electrostatic discharge probably occurred and ended our test. Below are some photographs of the test setup.

Figure 4. Life Test Setup

The final mechanisms have been built and two flightworthy units (flight and flight spare) have been delivered to the project. The flight mechanism has been integrated into the flight model for MIRO. Rosetta is scheduled for launch in January of 2003.

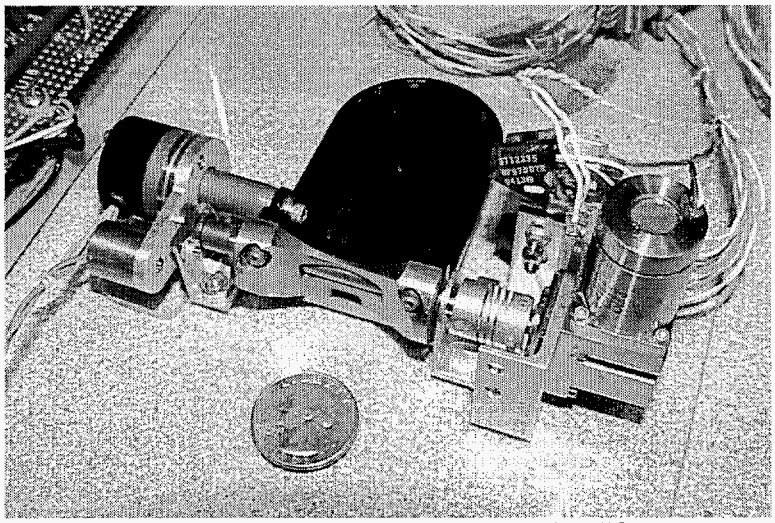

Figure 5. Photo of the mechanism during life test

Issues and Concerns (Lessons Learned)

Fragility of the SMA Pinpuller (Failure #1): On the qualification mechanism (integrated to the qualification instrument), an electrical engineer inadvertently reversed two connectors and then turned the system on. This resulted in a lot of current being applied to the pinpuller for too long a time. The pinpuller's Nitinol wires significantly surpassed their transition temperature for a considerable time, rendering the pinpuller inoperable. The mechanism had been delivered to the with no connector (i.e. with pigtails). Due to extremely tight mass requirements, the project elected to drop a little mass by removing the mechanism's connector. The cabling engineer, at the system level, used two identical connectors, of the same gender, in the same area. This created the confusion which led to the mistake. Thankfully, the unit had already gone through the necessary system level tests needed to prove the design was robust. Lesson learned: resist the request of a project to remove your connector, and work with the cabling engineer to ensure that your connector is different from those in the surrounding area. Truthfully, we (the mechanical team) were not sure how to prevent such electrical-team-induced failures from occurring. However, TiNi has since recommended that we could have incorporated a microswitch that would shut off power to the pinpuller, eliminating the possibility of the SMA wire overheating (and re-annealing).

Fragility of the SMA Pinpuller (Failure #2): After the flight mechanism had been mechanically integrated into the optical bench of the instrument, a long period of time had transpired before the cabling was integrated to its flight connector. Due to the pauper-like funding for this instrument, various integrations occurred at spread-out intervals. This made Quality Assurance (QA) coverage difficult, and due to the financial situation QA was reduced to a bare minimum. Eventually, the wiring for the flight unit was being connected to the appropriate connector. As the cabling engineer was about to solder the connector in place, he checked the resistance of the pinpuller's primary and redundant circuits. On the primary circuit, he noted 2.4 ohms, on the redundant he found an open circuit. The mechanism had previously successfully gone through a diminished flight acceptance test, but the redundant circuit had passed. The mechanism was removed, the pinpuller was replaced, and the mechanism returned to flight integration. Analysis of the failed pinpuller found that a wire on the pinpuller's redundant circuit had broken at a solder joint internal to the pinpuller. Several design flaws were found (although the pinpuller had been built at TiNi Aerospace, the design was a JPL design that TiNi helped bring into production. So it's our fault). First, there was no strain relief for this connection. Second, there was no conformal coating used to insulate the wiring. Third, a grommet which was originally in the design had been removed. Fourth, the wire used was fairly stiff. Lesson learned: this pinpuller is undergoing rework at TiNi per our direction. Strain relief has been added to the wiring, conformal coat has been added to the area. A grommet is being added to the pinpuller housing. And the wire will be changed to a wire that is less stiff (same gage, but more strands). Run your electrical connections by an experienced packaging engineer, even for devices built out of house, and get their approval of the design before allowing its use.

Fragility of the SMA Pinpuller (Failure #3): This incident is still under investigation, but the speculation is that a floating ground may have led to a failure of the FPGA internal to the MIRO electronics. This failure resulted in current being applied to the pinpuller for longer than intended (see failure #1). Assuming that this is the cause of the anomaly, we're unsure as to what a mechanisms engineer could do to safeguard his/her design from a failure of the electrical system. Because the pinpuller requires between 120 and 150 milliseconds to activate, an electrical fuse would not be an appropriate solution. A microswitch, as referred to in failure #1, should always be incorporated in the SMA pinpuller design to protect from such failures.

Position Sensing of the Mirror (not a failure): The requirements for this mechanism dictate that there must be a way to provide feedback to the MIRO computer that indicates when a mirror is at appropriate reflective positions. Reflective object infra-red sensors were chosen to perform this task. The side of the mirror was polished to provide high reflectance. During characterization of the mechanism, we faced a dilemna. During assembly one can set the sensitivity of the sensors by changing the resistance values of a resistor in series with the infra-red transmitter (changing the resistor to a lower resistance results in increased current flow through the transmitter, and more light is transmitted). Characterization proved that at different light conditions, and at different temperatures, the sensitivity changed some more. Therefore at cold temperatures some sensors could not find the mirror when it should have, and at hot temperatures

the mirror was detected by some sensors around 5 degrees away from its sensor position. In my opinion, we picked the wrong sensor for the job. That aside, we did not implement the sensors we chose in an appropriate way. Instead of detecting the entire side of the mirror, we should have placed a 10mm long dowel pin, normal to the surface of the side of the mirror, with its end polished. Therefore, the sensor would only see the pin when it was placed in front of its nose, but when the pin moved out of the way the surface that is left is not at an appropriate focal length for good sensing. But we feel a better sensor configuration would have used the infra-red emitter / detector pair that was direct, but not reflective (they're positioned in a U-shape). The device senses when the beam is blocked and when it is not. Although we have no experimental data to back this up, it looks to us that this configuration would prove to be more accurate and more reliable (you could dramatically increase the sensitivity of the sensor, making ambient light and temperature effects less significant). A potentiometer may also have been worth investigating, though reliability concerns frightened us away. Lesson learned: There are many ways to sense position – talk to other engineers and listen to their past experiences with such devices.

Conclusion

We'd like to take a moment to point out that this experience in no way diminished our belief that the SMA pinpuller is the appropriate device to handle the failsafe function of the design. A lot of the problems we had came as a direct result of human error, some of which an improved design could have compensated for. Other areas could not have been compensated for in the design while still maintaining high reliability, low complexity, and low mass. As mechanism engineers we have to accept some of the risk levied on us by the other disciplines on the team.

But to review some areas that would have helped the design:

1) never deliver hardware with pigtails – always incorporate your own connector
2) ensure that the connector you place on your mechanism is different from those surrounding it
3) work with your vendors to make sure all aspects of their hardware is consistent with the high standards you have set for your own work
4) be sure to incorporate a microswitch to shut off an SMA device upon appropriate displacement to ensure overheating of the SMA does not occur.