AAS 05-064

CONTROL AND DATA SYSTEMS CHALLENGES IN DESIGN OF THE JUPITER ICY MOONS ORBITER SPACECRAFT

Tooraj Kia, Kim Reh

Jet Propulsion Laboratory
California Institute of Technology

28th ANNUAL AAS GUIDANCE AND CONTROL CONFERENCE

February 5-9, 2005
Breckenridge, Colorado

Sponsored by
Rocky Mountain Section

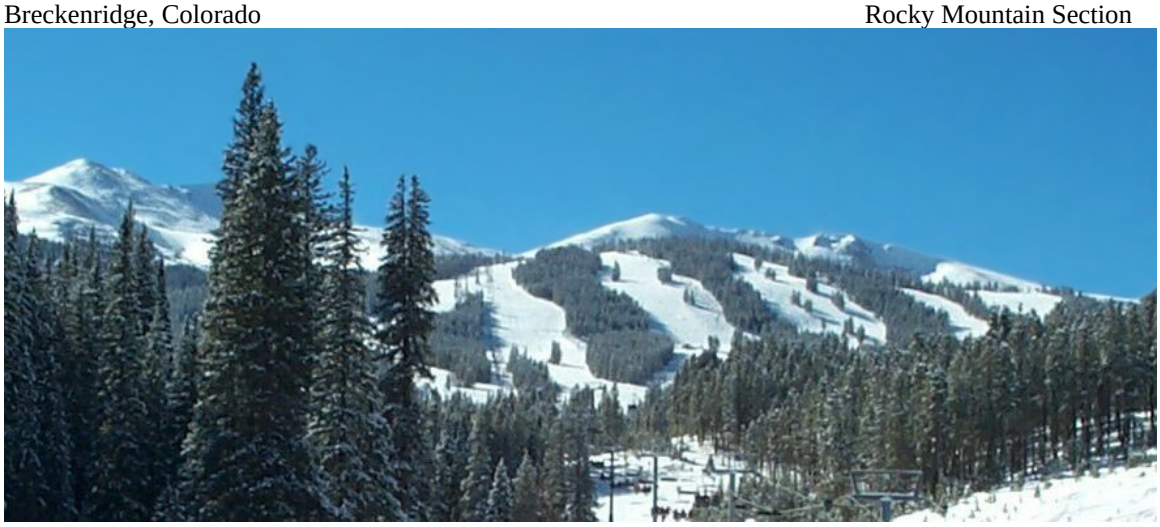

AAS Publications Office, P.O. Box 28130 - San Diego, California 92198

CONTROL AND DATA SYSTEMS CHALLENGES IN DESIGN OF THE JUPITER ICY MOONS ORBITER SPACECRAFT[1]

Tooraj Kia, Kim Reh[2]

To meet the power demands of deep space missions to the outer reaches of the solar system and beyond, where solar energy is limited; designers have been searching for alternative means of power generation for space systems. Adequate power is needed for new investigations utilizing high capability instruments, concurrent scientific observation using multiple instruments, high-rate transmission of science data to Earth, and spacecraft propulsion. To address this issue, beginning 2002, NASA conducted a study to investigate the feasibility of using nuclear energy to power spacecraft. It was determined that a nuclear reactor based power plant could provide 100s of kilowatts of electrical energy that could then be used to meet the science and propulsion needs listed above. The conceptual spacecraft design consists of a nuclear reactor separated from the bus and instruments by a long boom to support large thermal radiator arrays and to provide attenuation of the reactor-generated radiation environment.

During the cruise and the transition into and out of the orbit of each Icy moon, the electric power generated by the nuclear power plant will drive ion-based Electric Propulsion (EP) thrusters, located on two gimbaled pods, to propel the spacecraft. Additional electrical thrusters, Hall Thrusters, located on the pods or on the spacecraft bus will enable attitude maneuvering. Due to the nuclear reactor operating environment however, none of the thrusters are placed at the reactor end of the spacecraft. This geometry, and the fact that the spacecraft is very large and flexible, provides special challenges to the attitude control system engineers. Thrust Vectoring Control (TVC) will maintain the spacecraft attitude during the continuous low thrust period, but the interaction between the control system, navigation, and the structure has the potential to introduce undesired disturbances. This problem could be further exacerbated by the three body dynamics of the Jupiter moon environment. Analysis has shown that most scientifically interesting orbits are unstable and therefore require frequent orbit adjustment. Coupling between the ACS and navigation functions will complicate this problem and therefore would offer new challenges to both subsystems.

Command and Data handling (C&DH) is another subsystem with unique issues and problems. One of the biggest challenges facing this subsystem is the unprecedented radiation environment in the Jovian system, particularly around Europa. The total ionizing dose (TID) behind 10 mil of aluminum accumulated over 113 days in orbit around Europa is predicted to be about 22 MRad. A second C&DH challenge would be accommodation of large data storage and transfer in a high radiation operating environment.

The objective of this paper is to introduce the readers to some of the challenges facing the Attitude Control and Command and Data Handling subsystems, and give an overview of approaches being considered to deal with these challenges.

[1] **This research was carried out at the Jet Propulsion Laboratory, California Institute of Technology, under a contract with the National Aeronautic and Space Administration. The views expressed in this document do not represent or imply an official Government positions or decisions, and do not necessarily reflect agreement by the Government.**
[2] **Jet Propulsion Laboratory, California Institute of Technology, Pasadena, CA**.

INTRODUCTION

Previous NASA missions to Jupiter collected data indicating vast oceans under the frozen surface of three of the large moons, Callisto, Ganymede, and Europa. These discoveries have led scientists to study these moons in more depth. In fact these discoveries have lead scientists to add Jupiter icy moons investigations to the list of the most desired missions as indicated in the Decadal Survey. To achieve this desire, NASA is developing plans for an ambitious mission to orbit these three planet-sized moons. A key objective of this mission, called Jupiter Icy Moons Orbiter (JIMO) will be to explore the three icy moons of Jupiter - Callisto, Ganymede, and Europa - and investigate their makeup, their history and their potential for sustaining life. However to meet all of the science objectives for such a mission, the desire for precision science, large data collection and high telecommunication capability, NASA plans to develop a nuclear fission reactor powered spacecraft. Developing a nuclear reactor and showing that it can be processed safely and operated reliably in long-duration deep space exploration is therefore another prime objective of the JIMO mission. A nuclear fission reactor could produce unprecedented amounts of electrical energy to significantly improve and increase scientific measurements, mission design options, and telecommunications capabilities. The nuclear reactor would also provide ample electrical power as necessary to propel the spacecraft Electric Propulsion (EP) Thrusters. This will give the craft more than 100 times more power than a non-fission system of comparable weight. Because the proposed mission requires the development and testing of many new technologies, the mission will be launched no earlier than 2015. As the mission is currently proposed, multiple heavy lift launch vehicles would lift the spacecraft and booster stages into low Earth orbit, where they would get assembled into a space vehicle. The chemical stages would then be fired to put the space vehicle on an escape trajectory toward Jupiter followed by continuous thrusting by ion-propulsion thrusters. After entering orbit around Jupiter, the spacecraft would orbit Callisto, then Ganymede, and finally Europa, Figure 1. The severe radiation environment at Europa limits the orbit duration. The harsh radiation environment would be an impediment to spacecraft electronics, even with advances in radiation-resistant electronics that would be used on this mission.

To that effect, a government study team consisting of NASA centers Glenn Research Center (GRC), Marshall Space Flight Center (MSFC), Ames Research Center (ARC), and Jet Propulsion Laboratory (JPL) was formed to develop concepts, define requirements and design plans to bring this concept to fruition. Naval Reactors (NR) later joined the team with the responsibility to develop the reactor module. In September 2004, Northrop Grumman Space & Technology (NGST) was selected as the industrial partner in this endeavor. At the time of this writing the unified government-industry team is developing a joint concept. This paper will present the government team's concept and discuss some of the challenges facing the design, particularly those relating to the Attitude & Articulation Control Subsystem (AACS) and Command & Data Handling (C&DH) subsystem.

The challenges to the AACS arise from the attitude and orbital dynamics interactions due to the low-thrust trajectory design, and controls structure interactions because of the large flexible multi-body structure and the non-collocated sensor-actuator pairs. The low-thrust continuous trajectory impact to the AACS is briefly discussed in this paper. Another major challenge to the designers is the coupling between the orbital and attitude dynamics during the spiraling maneuvers of the spacecraft, and the tight pointing requirements needed for science when in orbit around the Jovian moons. These issues and some possible remedies will be briefly discussed in the following paragraphs. Also we will present discussions on utilization of a scan platform articulation and impact of the spacecraft, the gravity gradient stabilized mode and of the nadir pointed attitude dynamics around Europa and possible approaches to the momentum

management. Finally we will present error budgets to assess the feasibility of the pointing performance.

Command and Data handling (C&DH) is another subsystem with unique issues and problems. One of the biggest challenges facing this subsystem is the unprecedented radiation environment of the Jovian system, particularly around Europa. The total ionizing dose (TID) behind 10 mil of aluminum accumulated over 113 days in orbit around Europa is predicted to be about 22 MRad. A second C&DH challenge then would be accommodation of large data storage and transfer in a high radiation operating environment. A final challenge to C&DH design was the two-fault tolerant subsystem requirement. This requirement has recently been relaxed, but was implemented in the design concept presented in this paper. Following a brief description of the C&DH concept, this paper will briefly describe these challenges and provide an overview of approaches being considered to deal with these challenges.

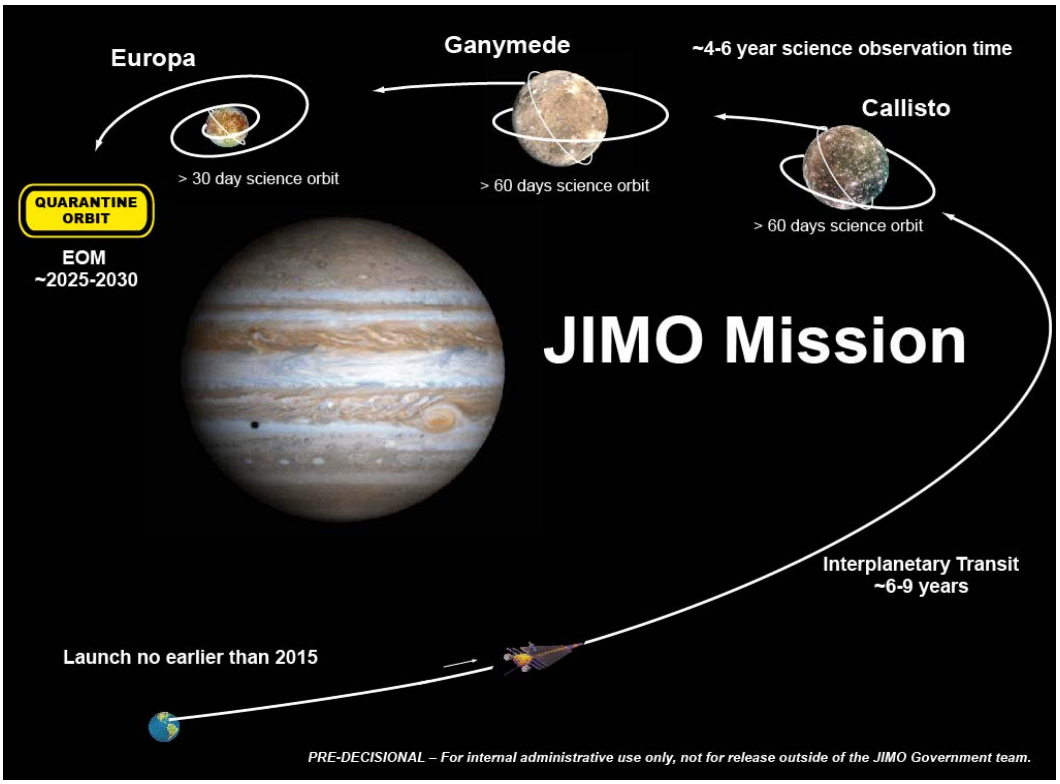

Figure 1 Baseline Mission Overview

Space System Description

This section will provide an overview of the Jupiter Ice Moon Orbiter (JIMO) Space System's major functions and software and hardware that comprise the government's pre-decisional Technical Baseline. This baseline also known as TB 2.5 incorporates a Liquid Metal cooled reactor with Brayton power conversion. Previous baseline designs have considered other options with Thermoelectric (TE) power conversion as well as Brayton. The TE option will not be discussed in this document as it does not impose any additional constraints on either AACS or C&DH subsystems.

The JIMO *Space System* includes the hardware and software that will be flown to the Jovian system. Past missions have commonly referred to this system as the "spacecraft". For JIMO, however, the magnitude of this system necessitates the use of JIMO-mission-specific

nomenclature, which is described below. The JIMO Space System has been divided into three *Modules*: the *Reactor Module*, the *Spacecraft Module*, and the *Mission Module*. Each module is then divided into *Segments*.

The Mission Module is the replacement for traditional payload and it includes Bus Mounted Instruments, Scan Platform, Turntable Auxiliary Science Package, and a fault tolerant computer dedicated to the Mission Module, and the Mission Module Software Segments. The Reactor Module includes Reactor Core & Reflectors, Primary Heat Transfer, Radiation Shield, Reactor Instrumentation and Control, and the Aeroshell and Superstructure Segments. The Spacecraft Module includes, Power Conversion and Heat Rejection, Electric Propulsion, Bus, Docking Adapter and the System Level Software Segments. The Bus segment is the most relevant to this paper as it includes the traditional subsystems including Attitude and Articulation Control (AACS) and Command and Data Handling (C&DH). The elements of the Space System modules, incorporating the liquid metal/Brayton (LM-B) combination, are illustrated in Figure 2.

Please note that JPL has already selected NGST to participate in co-design of the space system and at the time of this writing the joint government-industry team is in process of defining the new baseline design. In addition an investigation of nuclear power plant feasibility is ongoing by NRPCT that will result in a reactor/converter concept recommendation in February 2005, which may further impact the baseline design.

Driving Spacecraft Module Requirements

Level 3 requirements for the Space System have been derived from Level 2 requirements and are recorded as Space System Cross-Cutting, Spacecraft Module, Reactor Module, and Mission Module Level 3 requirements listings, Reference 1. A subset of the Spacecraft Module requirements that are critical in defining the architecture and design of the Space System,- referred to as the Driving Requirements, are listed in Table 1. The table also identifies the requirements that have been a challenge to meet.

Launch mass is a continuing challenge. Many mass reduction options have been addressed, including gravity assist trajectory options to reduce flight time, ΔV requirements, and launch mass. The payload fairing size has been another defining constraint. This baseline has assumed a fairing size to substantially alleviate the issues regarding the volume requirements of the Payload Accommodation Envelope.

Fault Tolerance Approach

JIMO's fault protection policy will be a major driver in the design of the Space System fault detection, isolation, containment, and response. The design is consistent with the Project's single-fault tolerance requirement and, in the case of critical sequences, a failure represents graceful degradation as opposed to mission ending. Additionally, key elements and functions are designed to be two-fault tolerant to enhance reliability and ensure mission success.

The Spacecraft Module includes specific fault-tolerant strategies, redundancies, and algorithms for the C&DH, AACS, and PC&D subsystems. All of these large spacecraft subsystems have an important role in providing the Spacecraft Module with fault protection. In fact, AACS and PC&D have their own localized fault protection software. However, C&DH is the subsystem that runs system level fault protection for the entire Space System. The flight software in the Spacecraft Module has the responsibility of monitoring the health of the space system.

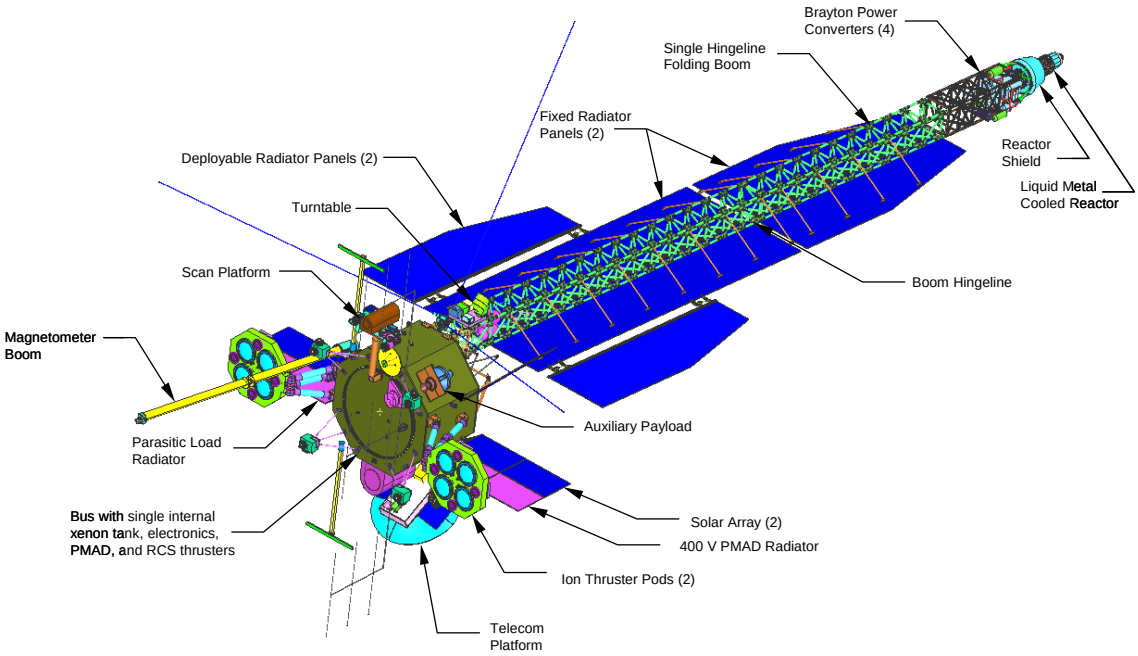

Figure 2 JIMO Space System: Liquid-Metal/Brayton Option.

Configuration

The configuration pictures presented in this section are designed to give an overview of the space system. Due to the large size and mass of the JIMO space system, multi-launch configuration with in-orbit docking capability is envisioned. Figure 3 shows a close-up view of the docking adapter in the docking configuration. The cruise and science acquisition configurations are both very similar and are shown in Figure 2. Figure 4 shows the details of the science instruments on the Scan Science Platform. Figure 5 shows the spacecraft dimensions under the deployed configuration.

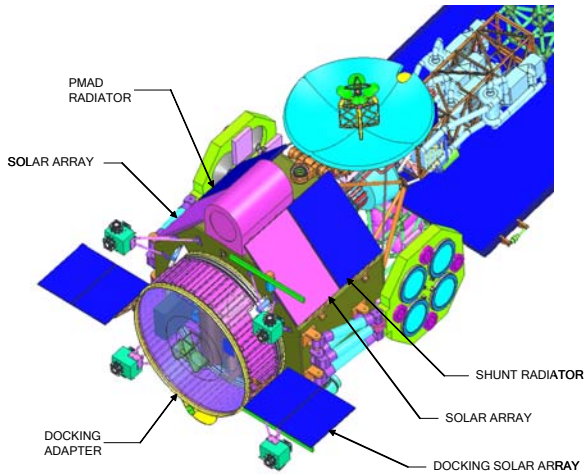

Figure 3. Close-Up of Bus & Docking Adapter in Docking Configuration.

Table 1. JIMO Driving Level 3 Requirements.

Requirement	Comments
The SS shall be designed to accommodate a total ionizing radiation dose specified in Environmental Requirements Document (ERD).	Is a tremendous mass driver. Minimizing mass through self-shielding and shared shielding complicates design process.
The space system shall be capable of a minimum acceleration of [0.3] mm/s2 during the Ganymede and Europa critical thrusting operations phases of the mission. The corresponding value for all other phases shall be [0.15] mm/s2.	Drives the design to incorporate Hall thrusters for the Ganymede and Europa critical thrusting operations phases of the mission.
The SM shall be designed to survive the micrometeoroid environment specified in the ERD with a probability of [TBD].	Protecting large area elements, such as radiator panel pumped loops and heat pipes, is a mass driver.
The SS wet launch mass shall not exceed TBD [35,000] kg.	
The Reactor Module shall be designed to enable the reactor core to reach the surface of the Earth intact following any ascent or LEO accident.	Greatly complicates design, analysis, and testing of the Space System. Potentially significant mass impacts.
The SS shall be capable of controlling residual center of mass accelerations resulting from non-gravitational disturbance forces to within [ ] m/s² during science observations, for a time interval of [24] hours.	Constrains the system design and operations in the science orbits.
The SM shall provide payload accommodations as specified in the Payload Accommodation Envelope	Large and complex payload is a tremendous challenge to the Space System configuration.
The SM shall accommodate an Optical Comm demonstration package with the following specifications: 90 kg mass, 130 W avg. pwr., 1 mrad pointing control, <1.5 mrad HGA boresight alignment, >50 Mbps data rate, 0.25 m^3 volume	Complicates the Telecom Pointing Platform. Pointing requirements are difficult and expensive to meet.
The Scan Platform shall provide the following capabilities: Pointing control accuracy: 1 mrad Pointing knowledge accuracy: 0.1 mrad Pointing stability: 5 µrad/sec	Very challenging pointing specs.

Finally, to protect the spacecraft electronics from the nuclear reactor radiation, a radiation shield was included in the design, as shown in Figure 6.

Table 2 identifies the summary mass, and center of gravity, and Table 3 identifies the summary inertias for the Liquid Metal/Brayton configuration. The inertias were computed about the spacecraft center of mass and were calculated with a negative integral.

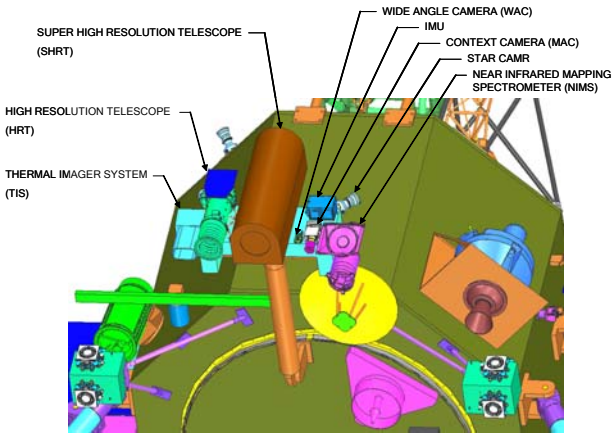

Figure 4. Scan Science Platform Instruments.

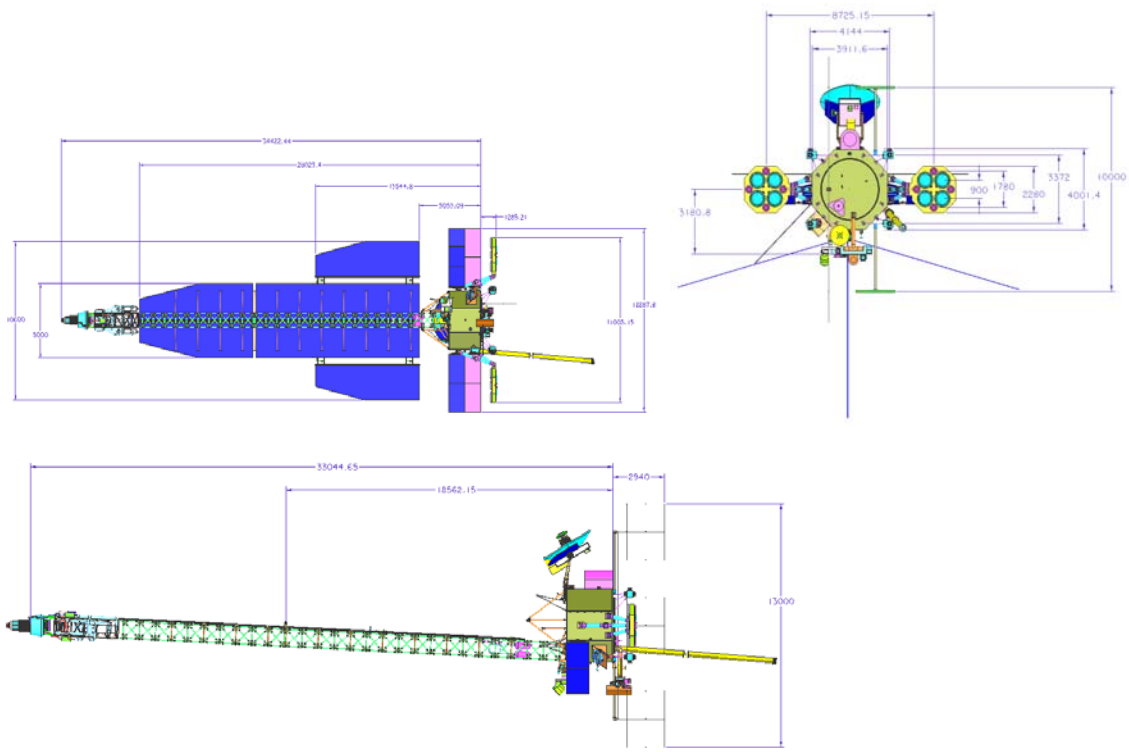

Figure 5. Deployed Spacecraft's Dimensions.

Table 2. JIMO Mass and Center of Mass Summary.

TB 2.5 Liquid Metal-Brayton	Mass (kg)	Center of Mass(cm)		
		X	Y	z
Launch/Stowed Spacecraft w/ DA (dry)	22,257	4	6	426
Cruise/Deployed Spacecraft w/ DA (wet)	34,257	3	-2	886
Launch/Stowed Spacecraft w/ DA (wet)	34,257	2	4	320
Cruise/Deployed Spacecraft w/o DA (wet)	33,387	3	-2	912
Cruise/Deployed Spacecraft w/o DA (dry)	21,387	5	-3	1,371

Table 3. JIMO Summary Moments and Products of Inertia

TB 2.5 Liquid Metal-Brayton	Moments of Inertia (kg-m^2)			Products of Inertia* (kg-m^2)		
	Ixx	Iyy	Izz	Pyz	Pxz	Pxy
Launch/Std SC w/ DA (dry)	411,935	415,809	38,087	4,411	2,383	304
Cruise/Dpd SC w/ DA (wet)	5,479,638	5,494,387	102,302	4,393	6,724	1,843
Cruise/Dpd SC w/o DA (wet)	5,399,717	5,414,477	101,384	4,262	6,973	1,844
Launch/Std SC w/ DA (wet)	481,177	484,971	47,915	2,987	1,523	283
Cruise/Dpd SC w/o DA (dry)	4,271,544	4,286,553	92,550	1,883	11,553	1,867

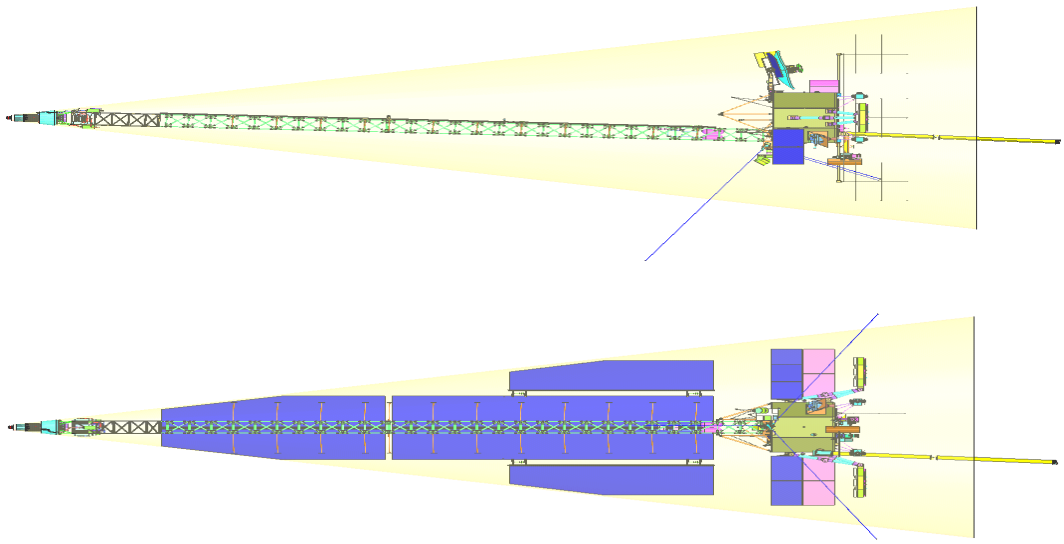

Figure 6. 12° Radiation Shied Cone for +X and –Y Axes Views.

AACS

Science and telecom pointing are the key driving requirements impacting the control system design. In addition the high resolution imaging science drives the vehicle's pointing stability. Table 4 shows the science pointing requirements, while Table 5 shows the key AACS pointing requirements. In addition to being a massive (~30,000 kg wet), large (>30 meters long), flexible spacecraft, the JIMO vehicle includes a nuclear reactor and the companion power converters (Brayton turbines spinning at more than 30,000 rpm). Fluid loops running through the heat rejection radiators are another source of pointing disturbance. The tight pointing and stability requirements, coupled with a large flexible spacecraft drives an AACS architecture that separates the high-performance science pointing from that of the basebody. In this architecture scientific instrumentation (cameras, plasma wave antennas, gravity experiments, magnetometer boom) would be mounted on the spacecraft bus as well as on a two-degree of freedom articulated scan platform. A similar approach places the telecom antennas on a separate gimbaled platform. The Scan Platform Assembly provides high-precision pointing (3 mrad control and knowledge) for the remote sensing instruments. It provides two-axis articulation through the assembly center-of-mass and a near-hemispherical range of motion. It is capable of pointing 90 degrees from the spacecraft Z-axis to accommodate science data acquisition throughout the Jupiter operations phase. The gimbal is offset from the engineering module by a stiff stub boom ~ 1 meter along roll axis, to enable a +/- 45 degrees travel range. The scan platform design concept includes

redundant IMU's and star trackers to allow for local high-precision pointing control and knowledge required for imaging science.

High data rates drive use of Ka-band science downlink. Articulation of the ~3 meter Ka-band boom mounted reflector would be done by a two-axis motorized gimbal providing +/- 90 degrees range of travel in each axis with shaft encoder feedback. The Ka-band required line of sight precision is not feasible by purely predictive (open-loop) pointing. Precision closed loop control is achieved by using an uplink beacon acquired by either a monopulse detector or an adaptive feed on the antenna, and the beacon boresight offset is output by the detector and fed as two axis error signals for the gimbal loops to null.

Figure 7 shows the AACS block diagram, Reference 2. This baseline is a 3-axis design concept that for control utilizes Electric Propulsion thrusters during cruise and reaction wheels while in orbit. Figure 8 shows the AACS components placement on the spacecraft basebody. The Xenon Cold Gas will be used for spacecraft stabilization after LV separation, for AACS control prior to Reactor start-up, and in stand-by for any contingencies. The Ion Engines will be used for Δv, orbit maintenance, and AACS Control during Cruise. The AACS Hall Thrusters will be used for AACS control during Coast, AACS control during spiraling, AACS turns, and momentum unloading. The Δv Hall Thrusters are the primary mechanism to augment the Ion Engine thrusters when needed for high-acceleration orbit maintenance.

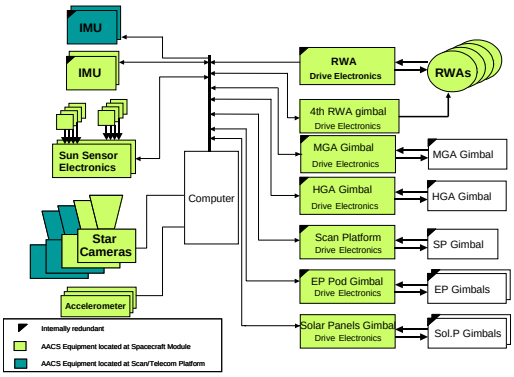

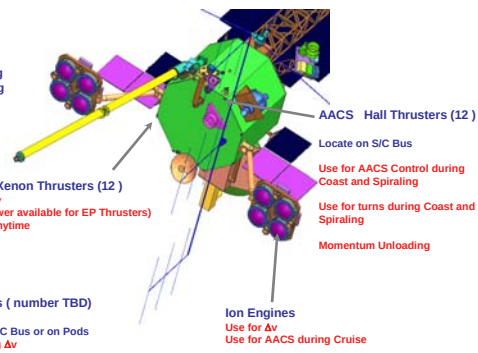

Figure 7. AACS Block Diagram. **Figure 8. AACS architecture.**

Twelve (300 mN class) Hall Thrusters are included in this design to provide RCS capability. They are placed on fixed mounting at the aft section of the Bus maximizing their control arm. The design also includes additional number of Δv Hall Thrusters for augmenting Ion Engines for larger Δv. They would be mounted in a cluster at aft section of the Bus or on the Pods. All Hall Thrusters and Ion Engines will have throttling (50% and 5% respectively) capability. The advantages of throttling are many. Throttling capability maximizes the use of high I_{sp} of AACS Hall Thrusters. It helps reduce the negative impacts of the AACS turns on the spacecraft trajectory, while allowing for AACS-Δv coupling when desired (powered cruise). It eliminates the need for flex tubing for the Spacecraft Bus mounted Hall Thrusters. It also reduces the risk associated with Pod Flex tubing and power cables (fewer lines required, reduced flexing). All of this translates into: fewer gimbal actuations, reduced gimbal range, reduced kinematics interactions, and more control authority from AACS Hall Thrusters. Figure 9 shows the cold gas and Hall thruster locations and directions on the spacecraft bus.

Table 4. Science Pointing Requirements.

	Instruments on scan platform		Bus-mounted instruments	
	Science orbit, nadir viewing, not thrusting	Other phases & modes	Science orbit, nadir viewing, not thrusting	Other phases & modes
Pointing control (mrad, 3 sigma)	**1 crosstrack 10 along track**	**1-2 crosstrack 10 along track**	**15 crosstrack 20 along track**	**25 crosstrack 30 along track**
MD allocation	0.5 crosstrack 10 along track	0.5-1.5 crosstrack 10 along track	0.5 crosstrack 10 along track	0.5-1.5 crosstrack 10 along track
MD architecture	autonomous pointing update using landmark identification against previously defined map, or late update based on RF and opnav			
Onboard attitude knowledge at time of images used for update	0.1			
Radiometric tracking architecture	See "Reconstruction"			
Late sequence update requirement	@ -3.5 days		@ -3.5 days	
Late sequence update architecture	similar to Cassini		similar to Cassini	
SS allocation	0.9	0.9	15	25
AACS suballocation	0.85	0.85	10	20
AACS architecture	Star cameras and IMUs provide inertial reference for pointing & stabilization of direct drive 2-axis platform		Star cameras and IMU provide inertial reference for pointing & stabilization	
Mechanical/thermal suballocation	0.1	0.1	3	3
Mechanical/thermal architecture	Model based predictions of the thermal distortions using both finite element and thermal models. Test based correlation to verify model predictions.		Model based predictions of the thermal distortions using both finite element and thermal models. Test based correlation to verify model predictions.	
Instrument suballocation	not included	not included	not included	not included
Instrument architecture	Will calibrate narrow-angle camera boresight alignment wrt instrument mounting surface pre-launch; inflight calibration of instrument boresight to star tracker boresights planned. Alignment parameters to be included in pointing control algorithms.		Measurement & control of the instrument boresight alignment wrt to mounting surface is dependent on the types of instruments selected and will likely be determined by manufacturing tolerances. Inflight alignment calibration is unlikely to be possible without internal metrology.	
Pointing reconstruction (mrad, 3 sigma)	**0.17**	**0.17-0.3**	**3***	**3-4***
MD allocation	0.1	0.1	0.1	0.1
MD architecture	radiometric tracking, altimetry, and landmark identification		radiometric tracking, altimetry, and landmark identification	
SS allocation	0.14	0.14-0.28	3*	3-4*
AACS suballocation	0.1	0.1-0.25	.1	0.2-2.0
AACS architecture	Star cameras and IMUs provide inertial reference and attitude estimate		Star cameras and IMU provide inertial reference and attitude estimate	
Mechanical/thermal suballocation	0.1	0.1	3	3
Mechanical/thermal architecture	Model based predictions of the thermal distortions using both finite element and thermal models. Test based correlation to verify model predictions.		Model based predictions of the thermal distortions using both finite element and thermal models. Test based correlation to verify model predictions.	
Instrument suballocation	not included	not included	not included	not included
Instrument architecture	Inflight calibration of instrument boresight to star tracker boresights planned; alignment parameters to be included in pointing knowledge algorithms.		Apriori knowledge of the instrument boresight alignment wrt to mounting surface is dependent on the types of instruments selected and will likely be determined by manufacturing tolerances. More accurate inflight alignment determination is unlikely to be possible without internal metrology.	

BG 7/1/2004

* Instruments needing better accuracy may rely on internal metrology + science data utilization.

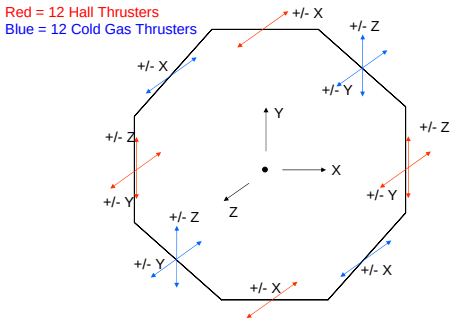

Figure 9. Cold Gas and Hall thrusters' locations and directions.

Table 5. AACS Pointing & Stability Requirements.

Requirement	Comments
Space System Pointing and Stability The SS shall adhere to the following pointing and stability requirements* (3-sigma): SS Pointing Control ≤ [20] mrad SS Pointing Knowledge ≤ [0.1] mrad The Space System shall be capable of meeting the above pointing and stability requirements while oriented ≤ [20] deg off the nominal nadir viewing orientation (relative to the moon orbit reference coordinate system) for a period ≥ [10] minutes. The Space System shall not be required to meet the stability requirements during reaction wheel momentum desaturations or attitude slews.	Additional details are sub-allocations (to be specified) within higher level Instrument pointing error budgets and must be separately specified.
Optical Communication Pointing The Space System shall provide optical communication pointing control during a non-thrusting demonstration period at ≥ [4.0] AU earth range to: SS Pointing Control ≤ 1 mrad (3-sigma) Optical Comm shall accommodate to the requirements of Ka band beacon referenced HGA pointing accuracy and HGA boresight stability.	JIMO only needs to demonstrate this at "Jupiter like ranges" which is 3-5AU earth range to validate this new technology.
Scan Platform Pointing Control and Knowledge (If a Scan Platform is required to support science investigations), the Space System Scan Platform shall adhere to the following pointing and stability requirements (3-sigma): Scan Platform Pointing Control ≤ [1] mrad Scan Platform Inertial Pointing Knowledge at Star Tracker boresight = [0.1] mrad, 3-sigma	Scan Platform angular accel. is faster than the SS ang. Accel, because some science and navigation cameras may need to track features quickly.
HGA Boresight Inertial Pointing The Space System shall point the HGA boresight with the following inertial accuracies: Control for X-band (predictive pointing without a Beacon) downlink = 3.0 mrad, 3-sigma, per axis. Control for Ka-band downlink Beacon Referenced pointing = 1.0 mrad, 3-sigma, per axis	Additional details are sub-allocations (to be specified) within higher level HGA pointing error budgets and must be separately specified.

Scan Platform Pointing Control Strategy

Figure 10 depicts the Scan Platform pointing control strategy. It relies on attitude knowledge from both bus-mounted and the scan-platform mounted star trackers. In the event of star tracker failures on the bus, a contingency plan uses the gimbal encoders to derive full inertial knowledge of the scan platform. Local control loops will be closed around each gimbal axis, possibly with high bandwidth due to the gimbal nonlinearities which are hard to characterize and compensate for while in flight. We are recommending an update rate of at least 100 Hz for the scan platform controller, to mitigate the effect of gimbal friction and intervening dynamics from the spacecraft. Figure 11 shows the scan platform control block diagram, identifying the data interchange between the spacecraft computer and the science computer.

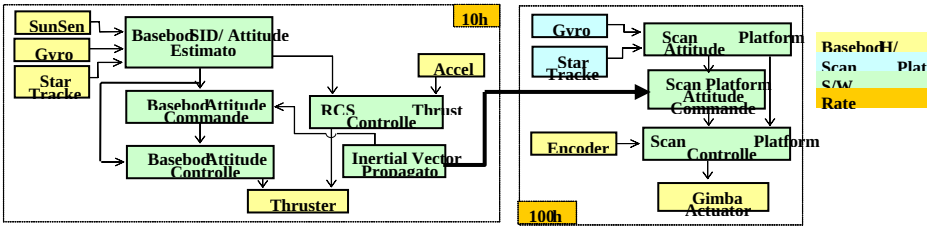

Figure 10. Scan Platform Control Strategy.

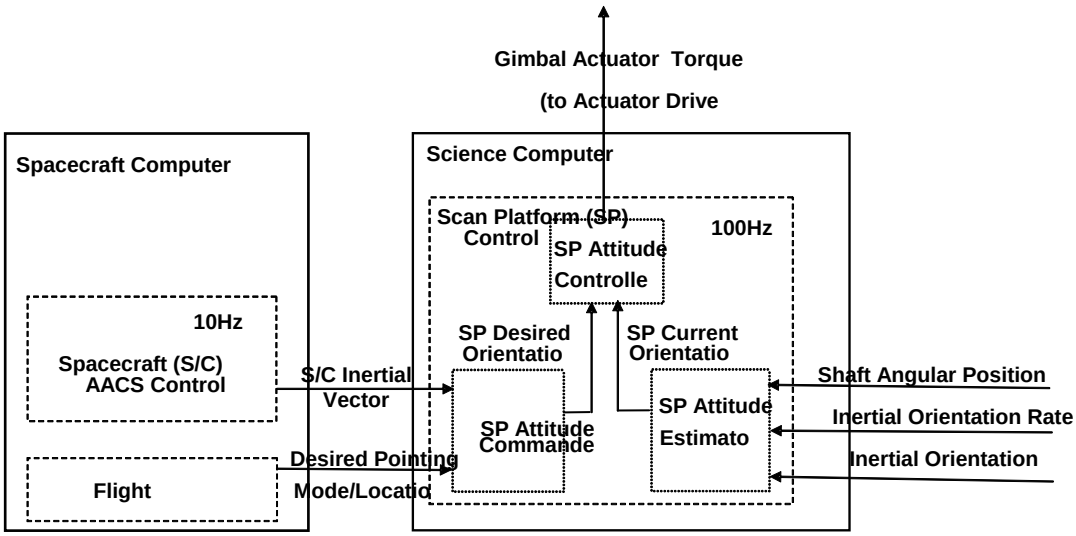

Figure 11. Scan Platform Control Block Diagram.

Scan Platform Pointing Error Budget

Figure 12 shows the scan platform articulation error budget, assuming that the scan platform inertial sensors, rather than the bus inertial sensors, are on-line.

Control for Telecom Pointing

The HGA is controlled via two-axis articulation through the center of mass of the platform, and a near-hemispherical field of regard (360 degrees in azimuth and 90 degrees in elevation) via a 2-axis motorized gimbal and shaft resolver feedback. High data rates necessitate use of Ka-band for science downlink. A 3-m diameter antenna should have ~ 0.06 deg (~1 mrad) total boresight error to keep the telecom loss due to pointing error under 1 db. Illustratively, operating at the 0.1 deg, not 0.06 deg, error point on the narrow pencil beam profile will cause an unacceptable 2.5 db or more loss, with the risk of roll-off from the main lobe into the sidelobes.

The Ka-band required precision is not feasible by purely predictive (open-loop) pointing. A closed loop is needed based on an Uplink Beacon acquired by a Monopulse Detector (an Adaptive Feed on the antenna providing electronic steering may be used additionally if needed). The Beacon boresight offset is output by the Detector as two axis error signals for the gimbal loops to null.

While acquiring the Uplink Beacon, an IMU on the platform (calibrated by a Star Tracker on the bus) provides predictive pointing within the 10 mrad dynamic range of the Monopulse Comparator. The Monopulse Comparator then locks on the Uplink Beacon signal and is used as the error sensor in the closed loop to achieve < 1 mrad pointing required for Ka-band.

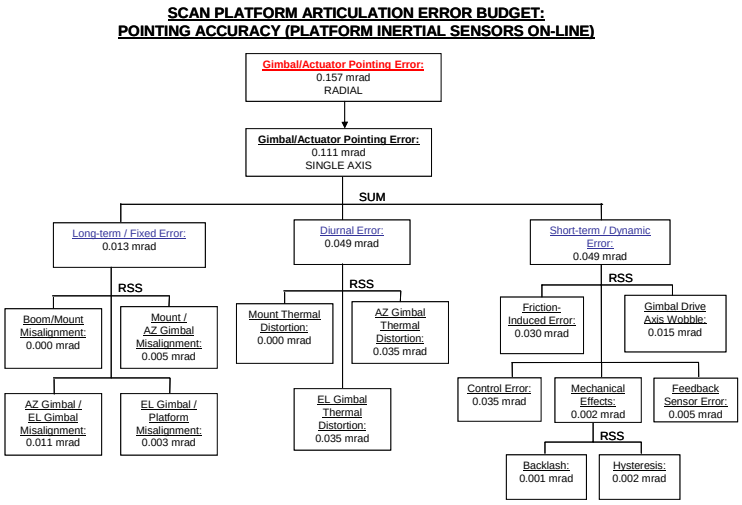

Figure 12. Scan Platform Pointing Error Budget.

The acquisition of the X-band monopulse beacon uplink is a transition mode from purely "predictive open loop pointing" to "beacon referenced closed loop pointing". This relaxes the required precision of the predictive pointing and all the error contributors involved from ephemeris precision and update latency to S/C attitude determination, HGA IMU calibrations, and gimbal servo accuracy, and alignment stability. To start the transition from acquiring the edge of the monopulse beacon at 10 mrad to the 1 mrad Ka-band precision only needs a correct steering polarity signal for the gimbal servos with a relatively coarse error magnitude precision. As the gimbal servos drive to null the monopulse tracker error signal, and continuous phase steering cancels any vibration and mechanical jitter, the closed loop (high bandwidth >>100 Hz) tracking of the beacon will converge to within the 1 mrad requirement. The AACS 3 mrad HGA boresight accuracy requirement is for an open-loop predictive X-band downlink pointing mode that does not utilize an uplink beacon, and demands far tighter control of all the error sources than the monopulse beacon acquisition mode. This is also driven by the tighter beam pattern of the original 3-meter HGA compared to the tetra-gregorian HGA and corresponding smaller boresight error and db loss allowed for the downlink. The result of having a monopulse referenced pointing system will be a far more robust HGA downlink capability.

Figure 13 shows the details of the HGA articulation error budget in the initial acquisition mode. Figure 14 shows the details of the HGA articulation error budget in the monopulse tracking mode.

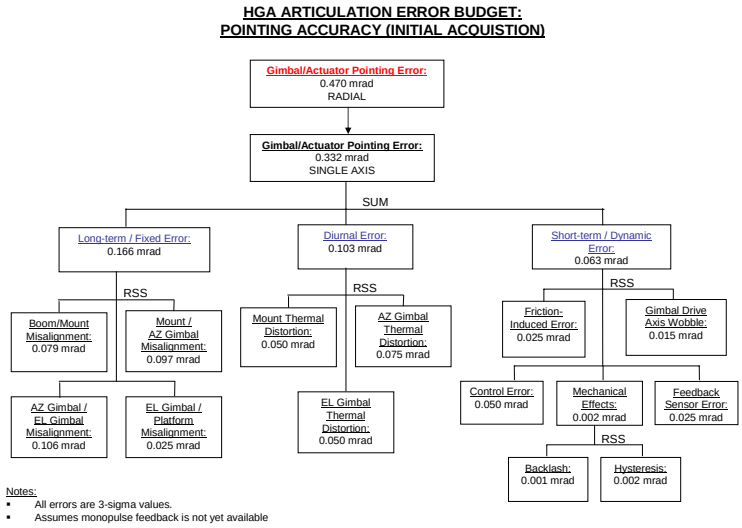

Figure 13. HGA Articulation Error Budget (Initial Acquisition).

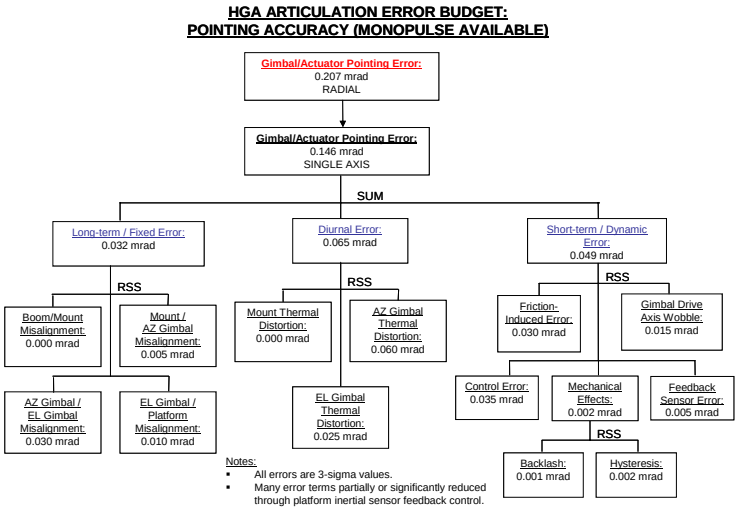

Figure 14. HGA Articulation Error Budget (Monopulse).

Thrust Vector Control

Two boom mounted Ion Engine arrays (pods) of 3 (4) thrusters each will be articulated with 2 dof gimbals to produce Roll, Pitch, and Yaw moments that null the spacecraft body rates and drive the net thrust vector through the spacecraft's center of mass. The EP based TVC system will have the capability of performing continuous coplanar spiral pitch turns during planetary escape and capture maneuvers, and uncoupled turns for plane change Delta-V maneuvers. Trajectory Path Guidance Control Laws will perform the combined functions of Delta-V and Thrust Vector Control during Powered Flight, Reference 3. Figures 15 & 16 provide the TVC control strategy and error budget. Current estimate of Xenon mass is about 12,000 kg.

Attitude Control Strategy Using Thrust Vectored Engines

Thrust vector control (TVC) using the ION engines does not provide optimal control for either AACS or navigation. TVC, if used for attitude control, ends up creating spurious lateral ΔVs, resulting in navigation error. Pure torque couples are needed to avoid navigation error. RCS

is best suited to provide pure couple control torques. However addition of throttling capability to the engines does help mitigate this problem.

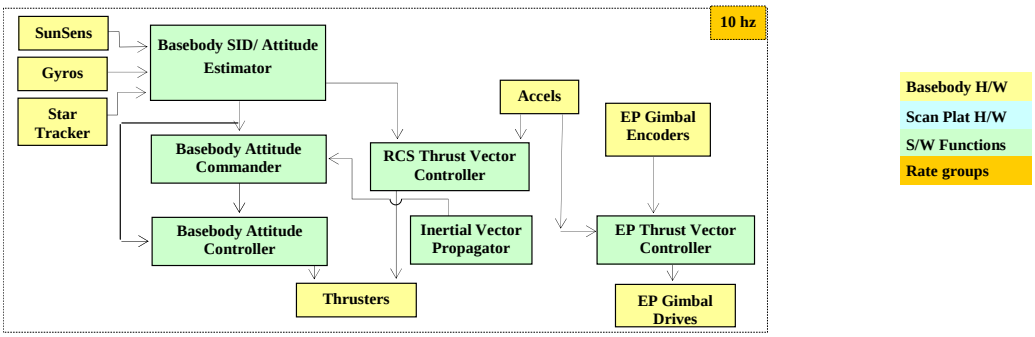

Figure 15. Ion Engine Thrust Vector Control Strategy for Delta-V.

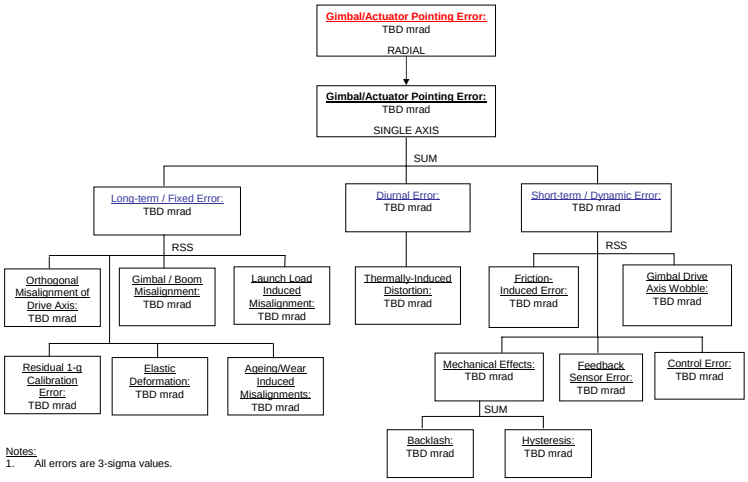

Figure 16. Preliminary Ion thruster articulation error budget.

Command & Data Handling (C&DH)

In addition to the radiation, other key requirements driving the C&DH subsystem design are listed in Table 6.

Based on these driving requirements, and trade studies, a symmetric design C&DH architecture was baselined, Figure 17. Major features of this design are use of identical computers in both spacecraft and mission modules, and use of bridges to connect the peripheral bus to the C&DH bus, Reference 1. Symmetric architecture is flexible and scalable since components may be added or removed according to performance, fault tolerance, and cost requirements. It also facilitates 2-fault tolerant with fewer components or cross-strapping as otherwise possible.

Table 6. Key Driving Requirements for the JIMO C&DH.

Function	Requirements
Fault Tolerance	Heterogeneous fault tolerance requirements: • Two-fault-tolerance in the Spacecraft Module • Single-fault-tolerance in the Mission Module
AACS	Three major control loops and their update rates: • Mission Module Scan Platform (100 Hz) • High Gain Antenna (100 Hz) • Spacecraft Attitude (10 Hz)
Telecom	• Transporting the 10 Mbps – 50 Mbps downlink data from Mass Memory to the Telecom • Framing and encoding the 10 – 50 Mbps downlink data stream
Data Compression	Compressing data from high-speed science instruments: SHRC (300 Mbps), TSAR (100 Mbps), IPR (55 Mbps), HIS (35 Mbps), NAC (30 Mbps), and MAC (16 Mbps).

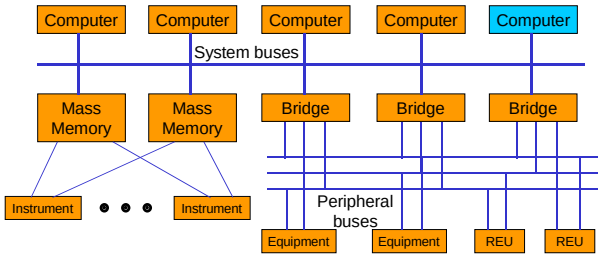

Figure 17. The JIMO C&DH Conceptual Architecture

Figure 18 shows the more detailed block diagram for the JIMO C&DH concept displaying component redundancy. The system bus uses a redundant IEEE 1394A Bus that provides a 98.304 Mbps raw data rate (≈60Mbps effective). In most circumstances, the redundant IEEE 1394A Buses can assist each other to reconfigure after a bus failure. In cases where two bus failures occur simultaneously, there is a possibility that the buses could not reconfigure themselves. Triple redundant I2C Buses are used to assist with the reconfiguration of the IEEE 1394A Buses in those cases. The I2C Buses are also used to interface with the Power Control & Distribution Subsystem and the Reactor Module. The peripheral bus uses a triple redundant MIL-STD-1553B and the LVDS Buses to connect legacy equipments. Logically, redundant computers and Mass Memories constitute the Mission Module C&DH, and redundant computers, bridges, REUs, and other equipment interface boxes constitute the Spacecraft Module C&DH. It should be emphasized that role of each computer can be interchanged and they could be reconfigured easily. For example, one of the computers can be eliminated if cold sparing is not required. This will not affect the dual fault tolerance because one of the Science Computers can be converted to Spacecraft Computer if both original Spacecraft Computers have failed.

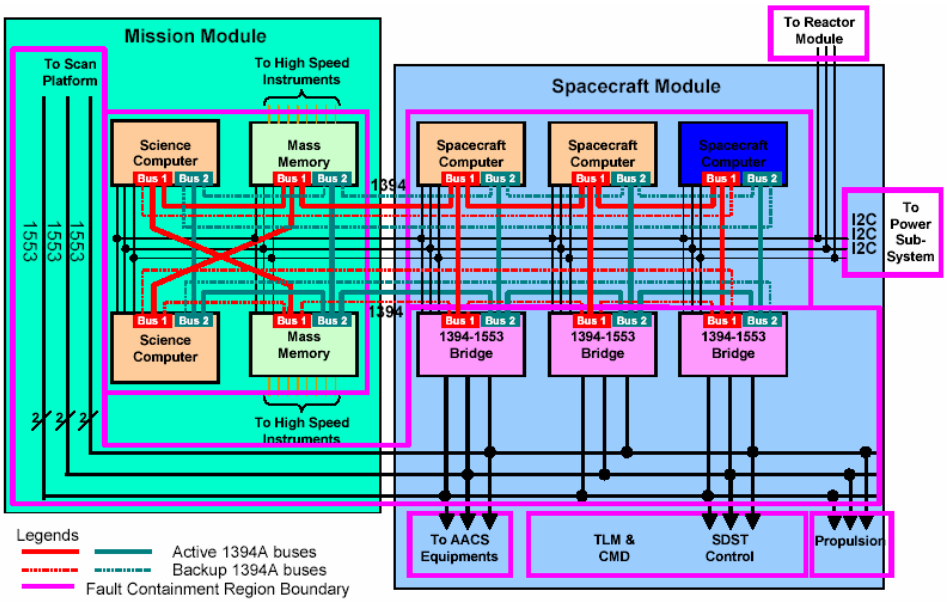

Figure 18. The JIMO C&DH Architecture Block Diagram (2-Fault Tolerant).

Approach to Fault Tolerance

The C&DH itself spans two Space System modules with different fault protection requirements: two-fault-tolerance for the Spacecraft Module, and single-fault-tolerance for the Mission Module. In addition, it interfaces with the other subsystems of the Space System that have various fault protection requirements. The C&DH design captures this heterogeneity of fault tolerance by the concept of *fault containment region*. Each fault containment region has the same level of fault protection. Faults originated from one fault containment region are tolerated in the same fault containment region but will not propagate to other fault containment region through interfaces. A few of the faults that the JIMO C&DH should, as a minimum, tolerate include, transient errors induced by the environment (e.g., SEU), software, interconnection, or hardware failures, and data transaction error caused by physical faults.

C&DH Computer

This study assumes that the RAD750 is the baseline processor for both the Spacecraft Computer and the Science Computer The RAD750 is a fully Power PC compliant processor developed by BAE. It has been radiation hardened to 300 Krad and SEU < 1E-5 Upsets/Processor-Day. The CPU is a Power PC 750 processor running at 132 MHz with onboard 128 MBytes of RAM, 256 Kbytes of start up ROM, and the PowerPCI PCI host bridge. The host bridge is based on the Motorola MPC 106 host bridge interface. The PowerPCI contains the memory controller, PCI interface and various ancillary components. JIMO RAD750 will be equipped with a faster (66 MHz vs 33 MHz) RAM bus, addition of a general purpose DMA controller and a “scratch pad” RAM to the PowerPCI bridge chip allowing improved performance for certain types of I/O operations.

Key Science Data Processing Requirements

Table 7 shows a set of strawman payloads for the JIMO mission that was specified for this baseline design concept. The data rates of six of these instruments exceed 10 Mbps, the other two instruments are about 1 Mbps, and the remaining nine instruments are less than 200 Kbps. The total peak raw data rate is 537 Mbps during the day and 156 Mbps at night.

Data Compression

The JIMO Space system requirements specify a minimum science data return rate of 10 Mbps at 6.3 AU. This is much less than the 537 Mbps science data collection rate. Hence data compression is a necessity. Previous trade studies have shown that the computation requirements far exceed the capability of the RAD750 processors, and thus hardware implemented data compressors are recommended for high-speed instruments. The hardware data compressors may be located either in the Mass Memory Assembly or in the instrument electronics box. The number and locations of data compressors and the compression algorithms to be used in each instrument will be decided later when the relevant information is available.

Science Instrument Interface

Trade studies on science data processing recommended that each instrument implement their own data compression algorithm and implement them in hardware that would be inserted into the cPCI backplane of the Mass Memory. While this approach is still viable, it may not provide the optimum use of available physical space. Another option would be to allow the moderately high-speed instruments to utilize built in data compressors to compress data before sending them to the Mass Memory through high-speed buses. In that case, one bus interface board in the Mass Memory assembly would be able to handle several instruments As a result, a hybrid approach is used that consists of the LVDS Bus for interfacing very high-speed instruments, the 1394A Bus for interfacing moderately high-speed instruments to the Mass Memory, and the 1553B Bus for low-speed instruments. This approach is depicted in Figure 19 (note that the bus redundancy detail is not shown).

Table 7. Strawman Payloads.

	Worst-case dayside raw data rate (Mbps)	Worst-case nightside raw data rate (Mbps)	Mapping orbit duty cycle	Possible compression factor	Compressed Rate (Mbps)	Compressed Dayside Rate (Mbps)	Compressed Nightside Rate (Mbps)
Super High-Res Camera (SHRC)	300		0.5%	6	50	50	
High Res Telescope (NAC)	30		10%	6	5	5	
Mapping Camera (MAC)	16		50%	6	3	3	
Hyperspectral Imager (HIS)	35		50%	18	2	2	
SAR Topographic Mapper (TSAR)	100	100	7%	4	25	25	25
Ice Penetrating Radar (IPR)	55	55	60.0%	33	1.7	1.7	1.7
Laser-illumination Spectrometer (LIS)		1.0	50%	6	0.167		0.167
Wide-angle Camera (WAC)	0.8		50%	6	0.133	0.133	
Thermal Imager (TI)		0.2	50%	6	0.03		0.03
Plasma Wave Spectrometer (PWS)	0.1	0.1	100%	6	0.02	0.02	0.02
Magnetometer (MAG)	0.004	0.004	100%	6	0.0006	0.0006	0.0006
Ion and Neutral Mass Spectrometer (INMS)	0.002	0.002	100%	6	0.0003	0.0003	0.0003
Heavy Ion Counter (HIC)	0.001	0.001	100%	6	0.0002	0.0002	0.0002
Energetic Particle Detector (EPD)	0.001	0.001	100%	6	0.0002	0.0002	0.0002
Plasma Spectrometer (PS)	0.001	0.001	100%	6	0.0002	0.0002	0.0002
Laser Altimeter (LA)	0.001	0.001	100%	6	0.0002	0.0002	0.0002
Dust Detector (DD)	0.00002	0.00002	100%	6	0.000004	0.000004	0.000004
Peak Total	536.909	156.309			86.629	86.429	26.885

Other trade studies indicated that the RAD750 cannot meet the performance requirement of the 10-50 Mbps downlink data rate, and suggests that hardware Telemetry Accelerator may be required. The recommended Telemetry Accelerator is a compactPCI compatible circuit board that can be inserted into the compactPCI backplane bus in the computer chassis. It consists of custom design ASICs to implement the encoding/decoding algorithms, and special registers, buffers, and logic circuits to manage the resources needed by the CFDP framing. Hence, this

design completely releases the processors from the burden of transferring the downlink data from SIO to Telemetry Accelerator, except for setting up the operations of the Telemetry Accelerator. The Telecom Interface architecture based on Telemetry Accelerator is shown in Figure 20.

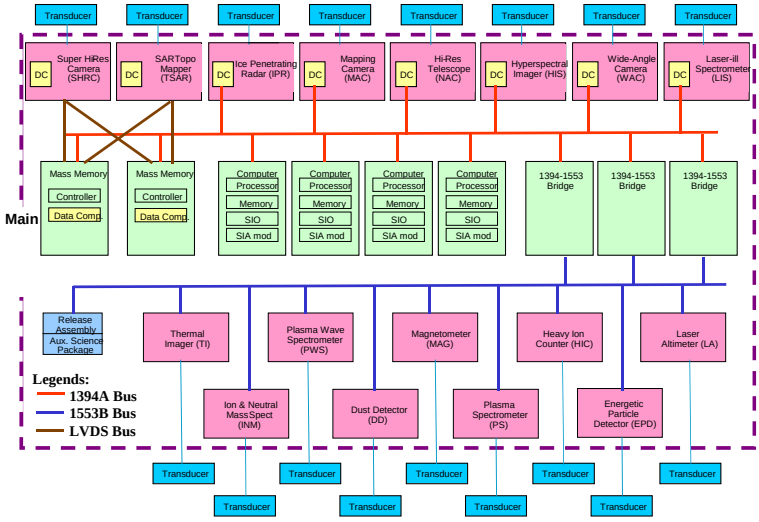

Figure 19. Science Instrument Interface.

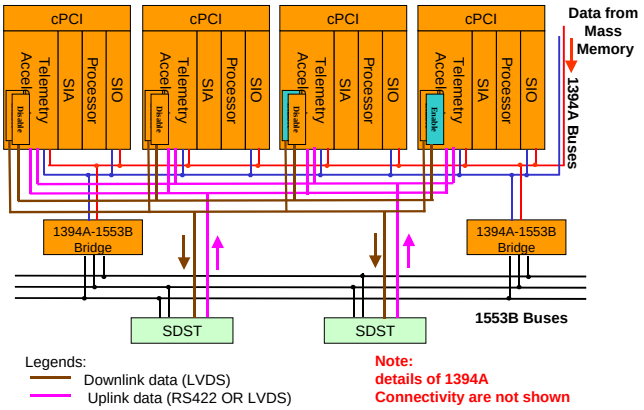

Figure 20. Architecture and Data Flow for the Telecom Interface.

Acknowledgements

This research was carried out at the Jet Propulsion Laboratory, California Institute of Technology, under a contract with the National Aeronautics and Space Administration. The authors are grateful to Dr. Marco Quadreli and Dr. Savio Chau for useful technical discussions.

REFERENCES

[1] "JIMO Space System Description Document," JPL Document 982-00051, Rev. 1, October 1, 2004.

[2] Quadrelli, M. et. al. "Dynamics and controls of the Jovian Moon Tours Spacecraft," presented as AIAA paper 04-4866 in the Small Body Orbital Dynamics session of the AIAA/AAS Astrodynamics Specialist Conference, Providence, RI, August 16-19 2004

[3] Quadrelli, M. et. al. "Thrust Vector Control of the Jovian Icy Moons Orbiter Spacecraft," Presented at the 15th AAS Space Flight Mechanics Meeting, Copper Mountain, CO, 23-27 January '05