Mars Exploration Rover Heat Rejection System Performance – Comparison of Ground and Flight Data

Gani Ganapathi, Gajanana Birur, Glenn Tsuyuki, and Robert Krylo
Jet Propulsion Laboratory, California Institute of Technology

Copyright © 2004 SAE International

ABSTRACT

Mars Exploration Rover (MER) mission launched two spacecraft to Mars in June and July of 2003 to land two rovers on Mars in January 2004. A Heat Rejection System (HRS) based on a mechanically pumped single-phase liquid cooling system was used to reject heat from electronics to space during the seven months cruise from Earth to Mars. Even though most of this HRS design was similar to the system used on Mars Pathfinder in 1996, several key modifications were made in the MER HRS design. These included the heat exchanger used in removing the heat from electronics, design of venting system used to vent the liquid prior to Mars entry, inclusion of pressure transducer in the HRS, and the spacecraft radiator design.

Extensive thermal/fluids modeling and analysis were performed on the MER HRS design to verify the performance and reliability of the system. The HRS design and performance was verified during the spacecraft system thermal vacuum tests. Based on the analysis and the testing of the HRS system, operations of the HRS during launch, cruise and prior to the Martian entry were developed and implemented. The electronics and radiator temperatures were within the range of the predicted values. The HRS system pressure was maintained at the predicted levels indicating any liquid or gas leakages were within the predicted values. The venting system on the spacecraft performed flawlessly in January 2004 when the pyro-vlaves in the HRS are actuated before the spacecraft entered the Martian environment.

The paper will describe the various design modifications made on the MER HRS from that of Mars Pathfinder spacecraft. A description of the flight performance during the seven-month cruise of the spacecraft will be given. A comparison of the performance on the ground and the flight will be presented. Any significant deviation in the flight performance will be described.

MISSION DESCRIPTION

The Mars Exploration Rover mission is part of NASA's Mars Exploration Program, a long-term effort of robotic exploration of the red planet.

Primary among the mission's scientific goals is to search for and characterize a wide range of rocks and soils that hold clues to past water activity on Mars. The spacecraft were targeted to sites on opposite sides of Mars that appear to have been affected by liquid water in the past. The landing sites are at Gusev Crater, a possible former lake in a giant impact crater, and Meridiani Planum, where mineral deposits (hematite) suggest Mars had a wet past.

The key features of the mission as well as the spacecraft are presented below.

SPACECRAFT FACTS

Cruise vehicle dimensions: 2.65 meters (8.7 feet) diameter, 1.6 meters (5.2 feet) tall
Rover dimensions: 1.5 meter (4.9 feet) high by 2.3 meters (7.5 feet) wide by 1.6 meter (5.2 feet) long
Weight: 1,062 kilograms (2,341 pounds) total at launch, consisting of 174-kilogram (384-pound) rover, 365-kilogram (805-pound) lander, 198-kilogram (436-pound) backshell and parachute, 90-kilogram (198-pound) heat shield and 183-kilogram (403-pound) cruise stage, plus 52 kilograms (115 pounds) of propellant.
Power: Solar panel and lithium-ion battery system providing 140 watts on Mars surface
Science instruments: Panoramic cameras, miniature thermal emission spectrometer, Mössbauer spectrometer, alpha particle X-ray spectrometer, microscopic imager, rock abrasion tool, magnet arrays

Rover A Mission
Launch vehicle: Delta II 7925
Launch period: June 10, 2003
Earth-Mars distance at launch: 105 million kilometers (65 million miles)
Mars landing: Jan. 4, 2004, at about 2 p.m. local Mars time (8:11 p.m. Jan. 3 PST)
Landing site: Gusev Crater, possible former lake in giant impact crater
Earth-Mars distance on landing day: 170.2 million kilometers (105.7 million miles)
One-way speed-of-light time Mars-to-Earth on landing day: 9.46 minutes
Total distance traveled Earth to Mars (approximate): 500 million kilometers (311 million miles)
Near-surface atmospheric temperature at landing site: -100 C (-148 F) to 0 C (32 F)

Primary mission: 90 Mars days, or "sols" (equivalent to 92 Earth days)

Rover B Mission

Launch vehicle: Delta II 7925H (larger solid-fuel boosters than 7925)

Launch period: July 7, 2003

Earth-Mars distance at launch: 89 million kilometers (55 million miles)

Mars landing: Jan. 25, 2004, at about 1:15 p.m. local Mars time (8:56 p.m. Jan. 24 PST)

Landing site: Meridiani Planum, where mineral deposits suggest wet past

Landing time: Approximately 1:15 p.m. local Mars time (8:56 p.m. PST)

Earth-Mars distance on landing day: 198.7 million kilometers (123.5 million miles)

One-way speed-of-light time Mars-to-Earth on landing day: 11 minutes

Total distance traveled Earth to Mars (approximate): 491 million kilometers (305 million miles)

Near-surface atmospheric temperature at landing site: -100 C (-148 F) to 0 C (32 F)

Primary mission: 90 Mars days, or "sols" (equivalent to 92 Earth days).

The spacecraft in their cruise configuration were as shown in Figure 1.

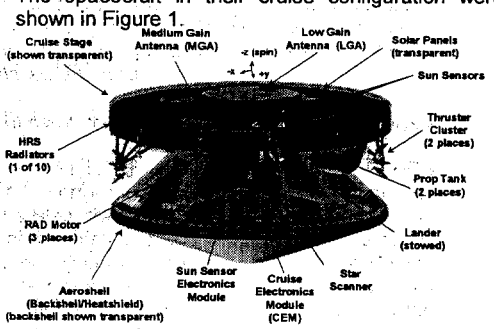

FIGURE 1. MER spacecraft in cruise configuration.

Approximately seven months after launch the spacecraft entered the Martian atmosphere directly from the interplanetary trajectory. Similar to the Mars Pathfinder mission, the MER entry trajectory followed an unguided, ballistic descent. The spacecraft relied on a heatshield and parachute to slow its descent through the Martian atmosphere, fired retro-rockets to reduce its landing speed, and finally deployed airbags to cushion its impact with the surface. After the airbag assembly rolled to a stop, the landers retracted the airbags, righted themselves and deployed the lander petals. The rover then deployed their solar panels completing the Entry, Descent, and Landing (EDL) phase of the mission. A

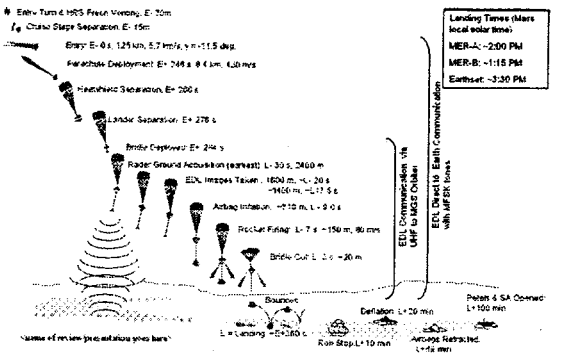

sequence of the Entry Descent, and Landing is shown in Figure 2.

FIGURE 2. Entry Descent and Landing Sequence

In a major departure from the MPF design, all flight system command, data handling, and motor control functions were located within the rover system using a VME bus and a RAD 6000 processor. The impact of this on the thermal design was significant; the rover needed to be designed to operate in the cold environment of Mars, while at the same time it had to operate while in the 7-month cruise phase with all the electronics turned on. Since the rover electronics is enclosed within a Warm Electronics Box (WEB), designed to survive the cold of Mars, there was no easy way to dissipate the 125W generated during the cruise phase. Thus, the active Heat Rejection System (HRS) designed and used on MPF and which worked so well, was planned to be used for MER. The design of the HRS has been documented elsewhere (Bhandari & Birur 1996; Birur et al, 1998; Birur et al., 1996; and Lam, Birur & Bhandari 2002) and will be discussed minimally in the next section to provide context for the remainder of the paper.

HEAT REJECTION SYSTEM (HRS) OVERVIEW

The main features of the HRS are 1) two redundant pumps to circulate the fluid (CFC-11), 2) an accumulator to accommodate changes in fluid volume as a result of large variations in fluid temperature seen through the mission, 3) plumbing to circulate CFC-11 to the Rover Electronics Module (REM) which is a box within the WEB and contains the electronic boards and scabbed-on telecom hardware, 4) 10-panel radiator (MPF design had 12; more on this later) on the cruise stage to reject the heat to space, and finally 5) structure for the pump assembly (known as Integrated Pump Assembly since it

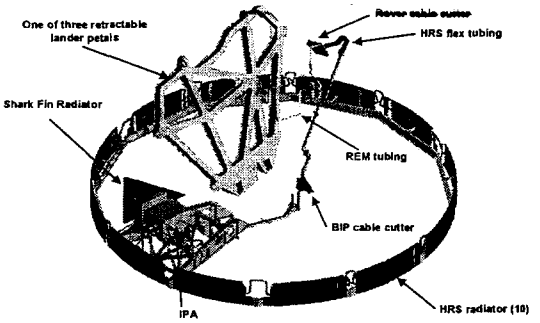

FIGURE 3. Heat Rejection System hardware.

has associated motor controllers, check valves, thermal valves to proportionally bypass radiator as MER approaches Mars). The structure in addition to holding the IPA, also holds two pyro valves needed for venting the CFC-11 prior to EDL, a filter and a pressure transducer to monitor the gas pressure for leaks in the system. The overall assembly including the IPA was called IVSR (IPA, Vent, Shunt Limiter and Radiator). The HRS system is shown in Figure 3 (rotated vertically 180° from Figure 1).

The MPF IPA was built by Howden Fluid Systems. However, since that time the company had dissolved after consolidation with their parent company, Western Digital. JPL purchased the license to manufacture the IPA (by JPL or another vendor) and a contract was awarded to Pacific Design Technologies (PDT) located in Goleta, CA to manufacture two flight IPAs and one spare IPA. The original contract was signed in March 2001. In little over one and one half years, three flight IPAs were delivered to JPL. by October 2002.

The original design philosophy for MER spacecraft was a build-to-print of the MPF design. Unfortunately, that was not feasible. Due to the fundamentally different configuration of having the Rover having all the "smarts", as opposed to all the "smarts" on the Lander Electronics Module for MPF, the MER design had significant changes. Fortunately, while there were significant perturbations to the IPA requirements in the initial stages, it became clear that the best design philosophy for reducing cost and schedule risk was to maintain the MPF design to the maximum possible extent. Since the MPF design was capable of rejecting 90W to 180W at a radiator temperature range of –80 °C to + 20 °C, this was adequate for MER. However, the plumbing had to be changed significantly to service the REM. The design goal was to maintain the same heat rejection capability with the new plumbing. Plumbing changes can cause the operating point (the intersection between the pump performance curve and the system impedance curve dictated by the tube length and, inner diameter) to change. The power, operating lifetime, and leakage requirements remained invariant over MPF requirements and are documented in equipment specfication (McGrath, 2001). The weight of the IPA was reduced from 8.3 kg to 6.5 kg by optimizing the IPA structure.

MER THERMAL REQUIREMENTS

The total heat dissipated in the REM during the cruise phase for MER is higher than for MPF. Also, due to the three-dimensional nature of the REM box and scabbed-on components, the heat density is higher than for MPF. As a result, more is expected of the HRS system for the current MER mission than for MPF. The dissipated heat for the cruise phase is shown below in Table 1 as well the allowable flight temperature limits in the operational and non-operational modes.

TABLE 1. MER Cruise Power Dissipation and Minimum and Maximum Operating Temperatures.

Component	Cruise Power (W)	Flight Allowable Temp Op. Min/Max (°C)	Flight Allowable Temp Non-Op. Min/Max (°C)
-X Face			
IMU (w/bracket)	14.8	-39/+51	-47/65
RHUs	3.6	NA	NA
+X Face			
SSPA	42.2	-25/+50	-40/+50
SDST (w/adaptor plate)	15.1	-25/+51	-40/+51
REM Boards	42.03	-40/+50	-40/+50
Battery RHU	6.5	NA	NA
IPA controller electronics	10.6	-30/+70	-30/+70
CSL power	.25	-25/+40	NA/+50
Total	**159.83**		

Not all components have been included in Table 1; only the ones that are functional during cruise.

MER VERSUS MPF HARDWARE DIFFERENCES

As mentioned in a previous section, a significant effort was expended to determine how to keep the IPA design invariant to keep the schedule and cost to a minimum. The MER and MPF hardware layout are shown below for comparison to provide a context for the HRS design effort.

ROVER VERSUS LANDER ELECTRONICS

As seen in Figure 4, the MPF HRS tubing was relatively simple since the electronics were all on a two-dimensional shelf, while in the REM for MER, the tubing run was extremely complex. In fact, the complexity was so great that the design effort to make the tubing run work took more than ten months to implement with regular meetings with mechanical and thermal engineers with significant iterations made to design to satisfy thermal and mechanical constraints.

The MPF electronics shelf was made of Al6061 with a basic thickness of 1.5 mm. Since the Solid State Power Amplifier (SSPA) was a high power dissipater (45W), the facesheet was thickened locally to satisfy the entry (when the HRS is no longer functional and the electronics in the lander relies on its thermal mass to manage its temperatures within limits.

The most prominent IPA design change involved the accumulator bellows. Senior Flexonics chose a thicker single-walled convolution over the MPF two thin-walled bellows as less likely to leak. In addtion, SF changed the bellows material from Inconel to AM350. Other notable differences were: 1) IPA structure mass optimization, 2) pressure transducer change from to Entran Devices to Taber, and 3) pyrovalve change from Pyronetics to Conax. All other components were same as for MPF.

THERMAL MODELING APPROACH

The HRS pump performance depends on the length and diameter of the plumbing as well as material. While the MER IPA was essentially the same as for MPF, the final flow rates predicted and observed using flight representative plumbing was in the order of 0.14 gpm which was lower than the 0.17 gpm predicted. Details on the test equipment developed for this purpose is available in (ref). Sensitivity analyses showed that this reduced flow rate, translated to approximately 2 °C increase in the components which was insignificant.

The Integrated Pump Assembly (IPA), located in the cruise stage, cools the warm freon coming from the rover by circulating it over the cold radiators and then allows the cooled freon to flow through over the rover. As the spacecraft recedes further away from the sun on its way to Mars, the radiator becomes increasing cold. In order to avoid overcooling the rover electronics, the HRS design includes a wax actuated bypass valve which controls the freon temperature entering the REM to be above –7 °C. The schematic of the HRS is presented in Figure 7.

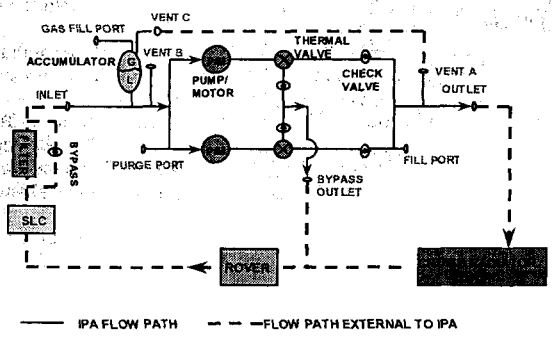

FIGURE 7. HRS schematic

The modeling was broken into two separate tasks – the radiation modeling, which was part of the overall cruise mode,l and a separate REM thermal model which was a high fidelity model covering the temperatures of the components on the REM face.

The radiator model used optical properties of 0.88 for the emissivity, 0.19 for the beginning-of-life solar absorptivity, and .30 for the end-of-life solar absorptivity.

The system-level TSS model contained logic to simulate the flow of Freon, the variation in heat transfer coefficient to the radiators, and the action of the wax switch. Fortran statements in Variables 1 sense the temperature of the wax and divert the flow to the radiators when the Freon is warmer than 0°C, bypass the radiators when the Freon is colder than -7°C, and mix the flow between 0°C and -7°C. Further logic operates on the portion of flow in the radiator tubes to derive the heat transfer coefficients. Heat transfer coefficients come from the Dittus-Boelter equation,

$h = (k/d)*.023*(Re^{.8})*(Pr^{.33})$ where

h = Heat transfer coefficient
k = Thermal conductivity of the Freon
d = Inner diameter of the tube
Re = Reynolds number
Pr = Prandtl number

Left Book?

Heat loads from the sun and from the spacecraft are included in the system-level thermal model. Solar loads come from the Heatrate module of TSS. Spacecraft spin is simulated in Animation while the position of the sun is handled by Heatsource. Parasitic loads, in the form of conduction and radiation to the back of the radiators also come from the conduction and radiation networks of the system model.

The REM was assumed to thermally isolated from the rest of the spacecraft which allowed the high fidelity REM modeling to be done independently. This assumption is ok since the REM is located within the WEB which is specifically designed to have minimum heat leaks on the mars environment.

The model was developed in TAS (Harvard Thermal, Inc.). Each face had 20x20 nodes and only conduction for the solid faces was considered. Since the REM is within an isolated WEB, it is safe to ignore heat radiation. TAS allows for the fluid flow elements to be modeled as nodes which are connected to the rest of the model through resistors. For each flow path, the product of the specific heat, density and volumetric flow rate of the fluid is entered. Modeling of the fluid path proved to be the most challenging aspect of the model, due to the complicated path and non-uniform lengths. Initially, there was no HRS tubing on the –X face due to real estate constraints, but the model indicated that AFT limits would be exceeded for the IMU and subsequently additional HRS run on the –X face was added.

The following assumptions were used in the steady-state model:

1. Cp for CFC-11 = 867 J/kg/K;; mdot = 0.015 kg/sec (based on flow = 0.606 lpm (0.16 gpm), density = 1500 kg/m^3).
2. Cp for Al 7050-T7451 = 157 J/kg
3. Eccobond 66C is used to bond the tube to the face surfaces. The minimum distance between the tube and faces is 0.010 in., and average integrated thickness is
4. The +/- X,Y faces are tied to each other by 5 M4 bolts (resistance = 1.55 °C/watt). The +/- Z faces also have M4 bolts but are more in number. (7

for +/-Z face to +/-Y faces and 13 for +/-Z faces to +/- X faces).

5. Wall thickness is assumed to be 1.5 mm everywhere except under the IMU where it is 2.25 mm.
6. Power dissipation for the RPCU and RAD6K is assumed to be through the +Y face only due to the nature of the bracket used to support these two components.
7. There are 10 boards and the total power dissipation on the boards are 42 W, of which 76% are dissipated on +Y face and 24% on the –Y face (due to the RPCU and RAD6k boards which don't span the entire length and have brackets which are tied to the –X face).
8. On the +X face, the SSPA power dissipation is 43W, SDST power dissipation is 15W; on the –X face the IMU dissipates 14.8W and the Battery RHU dissipates 3.6W.
9. The total heat to be removed from the REM is 125W.
10. For worst case close to earth condition, the incoming CFC11 is at 10 °C and when MER approaches Mars, the fluid temperature is approximately –15 °C.

Under these conditions, the model is shown in Figure 10 and results shown in Figure 11 and Table 2.

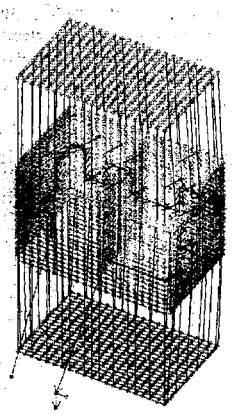

FIGURE 10. Model nodal representation.

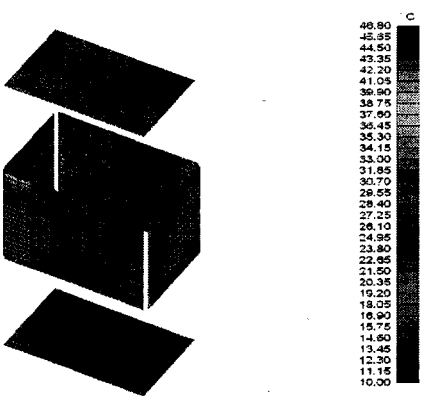

FIGURE 11. Model results for steady-state.

A sensitivity analysis was performed to understand the effect of flow rate on the steady-state temperatures. Increasing the flow rate has the effect of increasing the heat removing capacity of the fluid as well as increasing the convective heat transfer coefficient. However, the effect is not dramatic and the results are presented in Table 2 with a focus on the IMU and SSPA only.

It can be seen that the effect of changing the flow rate doesn't have an uniform effect on SSPA and IMU. Since the IMU is the first component in the flow path, the fluid temperature is at the inlet condition, while at the SSPA the fluid has warmed up as it has picked up heat along the way. However, the peak temperature is less than 2 °C going from 0.17 gpm to 0.14 gpm. This is reassuring as it shows that the HRS is quite robust for changes in flow rate and hence provides the needed margin for model inaccuracies.

TABLE 2. Flow Rate Sensitivity on Instrument Temperatures

Flow (gpm)	IMU Peak (°C)	SSPA peak (°C)	Outlet temp (°C)	Out-In (°C)
0.17	38.06	38.04	18.8	8.8
0.16	38.39	38.52	19.38	9.38
0.15	38.64	38.8	19.85	9.85
0.14	39	39.37	20.55	10.55

Entry Descent Landing (EDL) Transient Analyses

After seven months of the cruise phase, the MER spacecraft transitions to the EDL phase. A little over an hour before entry, the HRS system vents the Freon abroad in preparation to Cruise Stage Separation and landing on Mars. Once the CFC11 is vented, the temperature rise of the components is determined by the duty cycle and the thermal capacities of the components. Thus, it is important to ensure that the components are at a low enough temperature at start of EDL to ride out the temperature rise during EDL. A summary of the sequence is shown in Figure 2.

The analysis for the EDL phase is more involved than the steady-state analysis as it uses the mass of the components as well as duty cycle of the components as they come on and off during the EDL. The starting point for the EDL is the steady-state temperatures with the inlet fluid to the REM at –15 °C.

The modeling was done in two phases. In the first stage the steady-state model was run with inlet temperature of –15 °C obtained from the system-level model mentioned earlier. The results from this stage were then imported into the EDL model, where the flow elements were removed and the duty cycles of the power dissipation for all the components are included.

The SSPA temperature rise is actually a worst case and in fact will be much lower since in the model the mass of only one SSPA was included. The second SSPA was included relatively late in the design phase and hence was not included in time for this analysis.

The SSPA and SDST are assumed to be bolted to the REM faces through six M4 and eight M4 bolts respectively. They represent worst cases as it is assumed that all the heat transfer to the REM faces from the hot components occur only through the bolts, while in reality they will occur through the whole area of contact to some extent.

COMPARISON BETWEEN MODEL AND FLIGHT DATA

The flight data is compared with predicted for the following:

1. Radiator temperatures
2. Component temperatures during cruise phase
3. Component temperatures during EDL

The spacecraft was instrumented with RTDs at key locations which provided the data for this comparison. The location of the RTDs are shown in the Figures 12-xx

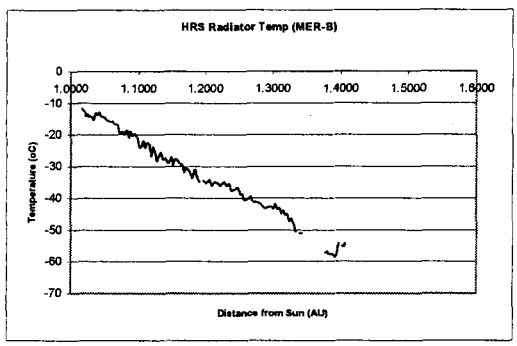

Put other figures here .....

Flight data indicated that the vent-induced nutation was very minimal, in the order of 0.4-0.6 degrees. This was done xx minutes prior to EDL.

All data indicated very good performance. TBD.

CURRENT STATUS OF ROVERS

Fill in some details about status of rovers.

SUMMARY AND CONCLUSIONS

TBD

ACKNOWLEDGMENTS

The research described in this paper was performed at the Jet Propulsion Laboratory, California Institute of Technology, Pasadena, under a contract with the National Aeronautics and Space Administration. The authors also wish to thank JPL personnel David Bame, Jack Patzold, Ray Kariger, Alex Mora, Jim Diener, Mike Kelley, Eddie Martinez, Joe Mora, Bob Path, John Shuping, Randy Williams, and Bob Zywan. Ray Kariger led the HRS technicians. Frank Picha oversaw the IVSR welding and integration.

REFERENCES

1. Bhandari, P., Birur, G., and Gram, M., "Mechanical Pumped Cooling Loop for Spacecraft Thermal Control," Paper No 961488, 26th International Conference on Environmental Systems, Monterey, California, July 8-11, 1996.
2. Birur, G.C. and Bhandari, P., "Mars Pathfinder Active Heat Rejection System: Successful Flight Demonstration of a Mechanically Pumped Cooling Loop," SAE Technical Paper No. 981684, 28th International Conference on Environmental Systems, Danvers, Massachusetts, July 13-16, 1998.
3. Birur, G., Bhandari, P., Gram, M, and Durkee, J., "Integrated Pump Assembly - An Active cooling System for Mars pathfinder Thermal Control," Paper No. 961489, 26th International Conference on Environmental Systems, Monterey, California, July 8-11, 1996.
4. Glenn Tsuyuki, Gani Ganapathi, David Bame, Jack Patzold, Richard Fisher, and Laurent Theriault, "The Hardware Challenges for the Mars Exploration Rover Heat Rejection System", presented at the Conference on Thermophysics in Microgravity, Session #A07, 'Thermal Control for Deep Space Missions', Space Technology and Application International Forum (STAIF) 2004, Albuquerque, NM
5. Ganapathi, G.B., Birur, G.C., Tsuyuki, G.T., McGrath, P.L., and Patzold, J.D., "Active Heat Rejection System on Mars Exploration Rover – Design Changes from Mars Pathfinder," Paper No. #142, Space Technology and Applications International Forum 2003, Albuquerque, NM, February 2003.
6. Lam, L, Birur, G., and Bhandari, P., "Pumped Fluid Loops," Satellite Thermal Control Handbook (2nd edition),

Comment: Use the Styles, instead of manually formatting the fonts. Use Normal, and not "Default Paragraph Font."

2004-01-2413

Mars Exploration Rover Heat Rejection System Performance – Comparison of Ground and Flight Data

Gani Ganapathi, Gajanana Birur, Glenn Tsuyuki, and Robert Krylo
Jet Propulsion Laboratory, California Institute of Technology

Copyright © 2004 SAE International

ABSTRACT

Mars Exploration Rover (MER) mission launched two spacecraft to Mars in June and July of 2003 and landed two rovers on Mars in January 2004. A Heat Rejection System (HRS) based on a mechanically pumped single-phase liquid cooling system was used to reject heat from electronics to space during the seven months cruise from Earth to Mars. Even though most of this HRS design was similar to the system used on Mars Pathfinder in 1996, several key modifications were made in the MER HRS design. These included the heat exchanger used in removing the heat from electronics, design of venting system used to vent the liquid prior to Mars entry, inclusion of pressure transducer in the HRS, and the spacecraft radiator design.

Extensive thermal/fluids modeling and analysis were performed on the MER HRS design to verify the performance and reliability of the system. The HRS design and performance was verified during the spacecraft system thermal vacuum tests. Based on the analysis and the testing of the HRS system, operations of the HRS during launch, cruise and prior to the Martian entry were developed and implemented. The electronics and radiator temperatures were within the range of the predicted values. The HRS system pressure was maintained at the predicted levels indicating any liquid or gas leakages were within the predicted values. The venting system on both spacecraft performed flawlessly in January 2004 when the pyro-valves in the HRS were actuated before the spacecraft entered the Martian environment.

The paper describes the various design modifications made on the MER HRS from that of Mars Pathfinder spacecraft. A description of the flight performance during the seven-month cruise of the spacecraft and a comparison of the performance on the ground and the flight is presented. Any significant deviation in the flight performance will be described.

MISSION DESCRIPTION

The Mars Exploration Rover mission is part of NASA's Mars Exploration Program, a long-term effort of robotic exploration of the red planet.

Primary among the mission's scientific goals is to search for and characterize a wide range of rocks and soils that hold clues to past water activity on Mars. The spacecraft were targeted to sites on opposite sides of Mars that appear to have been affected by liquid water in the past. The landing sites were at Gusev Crater, a possible former lake in a giant impact crater, and Meridiani Planum, where mineral deposits (hematite) suggest Mars had a wet past.

The key features of the mission as well as the spacecraft are presented below.

SPACECRAFT FACTS

Cruise vehicle dimensions: 2.65 meters (8.7 feet) diameter, 1.6 meters (5.2 feet) tall
Rover dimensions: 1.5 meter (4.9 feet) high by 2.3 meters (7.5 feet) wide by 1.6 meter (5.2 feet) long
Weight: 1,062 kilograms (2,341 pounds) total at launch, consisting of 174-kilogram (384-pound) rover, 365-kilogram (805-pound) lander, 198-kilogram (436-pound) backshell and parachute, 90-kilogram (198-pound) heat shield and 183-kilogram (403-pound) cruise stage, plus 52 kilograms (115 pounds) of propellant.
Power: Solar panel and lithium-ion battery system providing 140 watts on Mars surface
Science instruments: Panoramic cameras, miniature thermal emission spectrometer, Mössbauer spectrometer, alpha particle X-ray spectrometer, microscopic imager, rock abrasion tool, magnet arrays

Rover A Mission
Launch vehicle: Delta II 7925
Launch period: June 10, 2003
Earth-Mars distance at launch: 105 million kilometers (65 million miles)
Mars landing: Jan. 4, 2004, at about 2 p.m. local Mars time (8:11 p.m. Jan. 3 PST)
Landing site: Gusev Crater, possible former lake in giant impact crater
Earth-Mars distance on landing day: 170.2 million kilometers (105.7 million miles)
One-way speed-of-light time Mars-to-Earth on landing day: 9.46 minutes
Total distance traveled Earth to Mars (approximate): 500 million kilometers (311 million miles)
Near-surface atmospheric temperature at landing site: -100 C (-148 F) to 0 C (32 F)

Primary mission: 90 Mars days, or "sols" (equivalent to 92 Earth days)

Rover B Mission

Launch vehicle: Delta II 7925H (larger solid-fuel boosters than 7925)

Launch period: July 7, 2003

Earth-Mars distance at launch: 89 million kilometers (55 million miles)

Mars landing: Jan. 25, 2004, at about 1:15 p.m. local Mars time (8:56 p.m. Jan. 24 PST)

Landing site: Meridiani Planum, where mineral deposits suggest wet past

Landing time: Approximately 1:15 p.m. local Mars time (8:56 p.m. PST)

Earth-Mars distance on landing day: 198.7 million kilometers (123.5 million miles)

One-way speed-of-light time Mars-to-Earth on landing day: 11 minutes

Total distance traveled Earth to Mars (approximate): 491 million kilometers (305 million miles)

Near-surface atmospheric temperature at landing site: -100 C (-148 F) to 0 C (32 F)

Primary mission: 90 Mars days, or "sols" (equivalent to 92 Earth days).

The spacecraft in their cruise configuration were as shown in Figure 1.

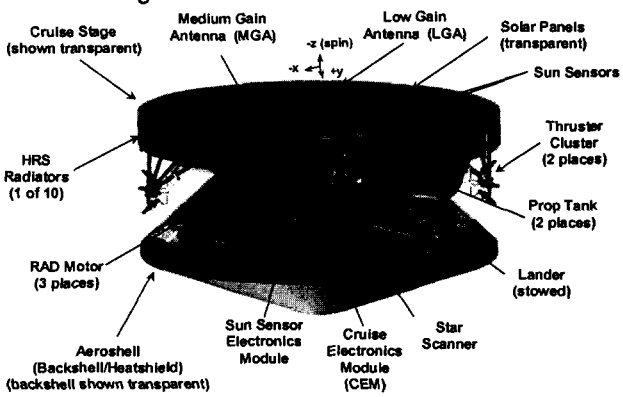

FIGURE 1. MER spacecraft in cruise configuration.

Approximately seven months after launch the spacecraft entered the Martian atmosphere directly from the interplanetary trajectory. Similar to the Mars Pathfinder mission, the MER entry trajectory followed an unguided, ballistic descent. The spacecraft relied on a heatshield and parachute to slow its descent through the Martian atmosphere, fired retro-rockets to reduce its landing speed, and finally deployed airbags to cushion its impact with the surface. After the airbag assembly rolled to a stop, the landers retracted the airbags, righted themselves and deployed the lander petals. The rover then deployed their solar panels completing the Entry, Descent, and Landing (EDL) phase of the mission.

In a major departure from the MPF design, all flight system command, data handling, and motor control functions were located within the rover system using a VME bus and a RAD 6000 processor. The impact of this on the thermal design was significant; the rover needed to be designed to operate in the cold environment of Mars, while at the same time it had to operate while in the 7-month cruise phase with all the electronics turned on. Since the rover electronics is enclosed within a Warm Electronics Box (WEB), designed to survive the cold of Mars, there was no easy way to dissipate the 125W generated during the cruise phase. Thus, the active Heat Rejection System (HRS) designed and used on MPF and which worked so well, was planned to be used for MER. The design of the HRS has been documented elsewhere[1,2,3,4] and will be discussed minimally in the next section to provide context for the remainder of the paper.

HEAT REJECTION SYSTEM (HRS) OVERVIEW

The main features of the HRS are 1) two redundant pumps to circulate the fluid (CFC-11), 2) an accumulator to accommodate changes in fluid volume as a result of large variations in fluid temperature seen through the mission, 3) plumbing to circulate CFC-11 to the Rover Electronics Module (REM) which is a box within the WEB and contains the electronic boards and scabbed-on telecom hardware, 4) 10-panel radiator (MPF design had 12; more on this later) on the cruise stage to reject the heat to space, and finally 5) structure for the pump assembly (known as Integrated Pump Assembly since it

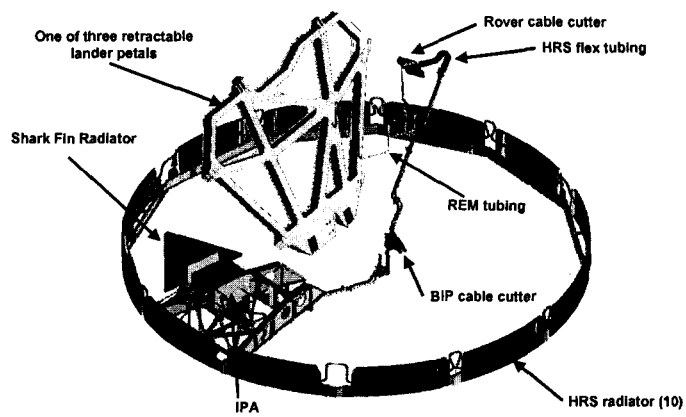

FIGURE 2. Heat Rejection System hardware.

has associated motor controllers, check valves, thermal valves to proportionally bypass radiator as MER approaches Mars). The structure in addition to holding the IPA, also holds two pyro valves needed for venting the CFC-11 prior to EDL, a filter and a pressure transducer to monitor the gas pressure for leaks in the system. The overall assembly including the IPA was called IVSR (IPA, Vent, Shunt Limiter and Radiator). The HRS system is shown in Figure 2 (rotated vertically 180° from Figure 1).

The MPF IPA was built by Howden Fluid Systems. However, since that time the company had dissolved after consolidation with their parent company, Western Design. JPL purchased the license to manufacture the IPA (by JPL or another vendor) and a contract was awarded to Pacific Design Technologies (PDT) located in

Goleta, CA to manufacture two flight IPAs and one spare IPA. The original contract was signed in March 2001. In little over one and one half years, three flight IPAs were delivered to JPL.

The original design philosophy for MER spacecraft was a build-to-print of the MPF design. Unfortunately, that was not feasible. Due to the fundamentally different configuration of having the Rover having all the "smarts", as opposed to all the "smarts" on the Lander Electronics Module for MPF, the MER design had significant changes. Fortunately, while there were significant perturbations to the IPA requirements in the initial stages, it became clear that the best design philosophy for reducing cost and schedule risk was to maintain the MPF design to the maximum possible extent. Since the MPF design was capable of rejecting 90W to 180W at a radiator temperature range of –80 °C to + 20 °C, this was adequate for MER. However, the plumbing had to be changed significantly to service the REM. The design goal was to maintain the same heat rejection capability with the new plumbing. Plumbing changes can cause the operating point (the intersection between the pump performance curve and the system impedance curve dictated by the tube length and, inner diameter) to change. The power, operating lifetime, and leakage requirements remained invariant over MPF requirements and were documented in equipment specification (McGrath, 2001). The weight of the IPA was reduced from 8.3 kg to 6.5 kg by optimizing the IPA structure.

MER THERMAL REQUIREMENTS

The total heat dissipated in the REM during the cruise phase for MER was higher than for MPF. Also, due to the three-dimensional nature of the REM box and scabbed-on components, the heat density was higher than for MPF. As a result, more was expected of the HRS system for the current MER mission than for MPF. The dissipated heat for the cruise phase is shown below in Table 1 as well the allowable flight temperature limits in the operational and non-operational modes.

TABLE 1. MER Cruise Power Dissipation and Minimum and Maximum Operating Temperatures.

Component	Cruise Power (W)	Flight Allowable Temp Oper. Min/Max (°C)	Flight Allowable Temp Non-Oper. Min/Max (°C)
-X Face			
IMU (w/bracket)	14.8	-39/+51	-47/65
RHUs	3.6	NA	NA
+ X Face			
SSPA	42.2	-25/+50	-40/+50
SDST (w/adaptor plate)	15.1	-25/+51	-40/+51
REM Boards	42.03	-40/+50	-40/+50
Battery RHU	5.7	NA	NA
IPA Controller Electronics	10.6	-30/+70	-30/+70
CSL Power	25	-25/+40	NA/+50
Total	159.03		

Not all components have been included in Table 1; only the ones that are functional during cruise.

ROVER (MER) VERSUS LANDER (MPF) ELECTRONICS

The MPF HRS tubing was relatively simple since the electronics were all on a two-dimensional shelf, while in the REM for MER, the tubing run was extremely complex. In fact, the complexity was so great that the design effort to make the tubing run work took more than ten months to implement with regular meetings with mechanical and thermal engineers with significant iterations made to design to satisfy thermal and mechanical constraints.

The MPF electronics shelf was made of Al with a basic thickness of 1.5 mm. Since the Solid State Power Amplifier (SSPA) was a high power dissipater (45W), the facesheet was thickened locally to satisfy the entry case (when the HRS is no longer functional and the electronics in the lander relies on its thermal mass to manage its temperatures within limits).

The REM box was made of Al and the HRS tube over the REM is also Al. The tubes ran continuously over four faces (+/- Y, +/- X) and did not cover the +/-Z faces. Notches were made in the ribs to accommodate the HRS lines. Since this caused a loss in mechanical strength, the design had bridges across the lines to recover this loss. Figures 3 and 4 show the REM and the HRS tubing.

The other differences betweem MPF and MER electronics included: 1) 2 SSPAs on MER versus 1 on MPF (no additional power though), 2) REM power (42W) versus MPF IEM power (32W), 3) REM RHU Holder (5.7W) versus MPF RHU (2.9W), 4) Shunt Limiting Controller power rating (25W vs 60W for MPF), and 5) IPA flight allowable temp (lower limit) increased from -40 to -30 °C

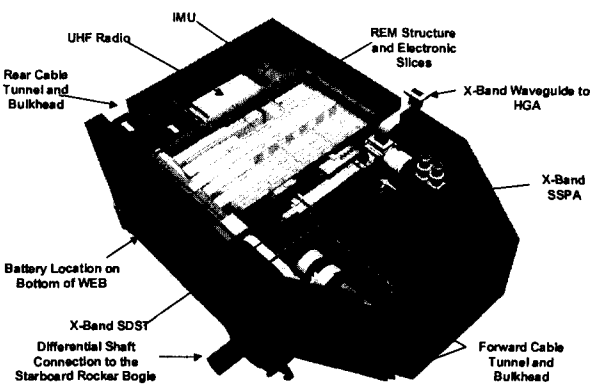

FIGURE 3. REM Chassis within the WEB.

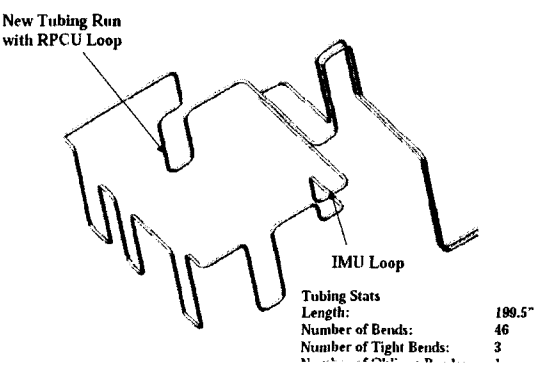

FIGURE 4. View of the heat removal tubing around the REM

RADIATORS

The MPF radiator was designed to reject a maximum of 180W and was made up of 12 panels running around the perimeter of the Cruise Stage (see Fig 2). The material used was Al with a thickness of 0.75 mm and thermally attached to the 9.53 mm (3/8") diameter. HRS tube also were made of Al. In the process of redesigning the HRS, the MER radiator panels maintained the same panel dimensions, but the number of panels reduced from 12 to 10 (the reduction was made to accommodate late integration of propulsion tanks while still affording heat rejection capability margin) and the tubing was changed from 9.53 mm OD to 7.94 mm (5/16"). The white paint used on the radiators for MPF was NS43G, while HINCOM white paint, manufactured by Aptek was used for MER.

TUBING

In order to minimize or avoid any changes to the IPA design, the most attention was paid to the tubing. The MPF design had mostly 9.53 mm (3/8") for the transfer lines and 6.35 mm (¼") for the heat exchanger lines. Significant trade studies were conducted to determine an optimal mix of tubing lengths and inner diameters to ensure the pump was adequate to satisfy ΔP/flow requirements while the fluid volume did not increase such that the accumulator had to be redesigned. The biggest change in the design was the use of 7.94 mm tubing in place of the 9.52 mm. The 9.52 mm tubing used in the IVSR remained intact to minimize design changes to that complex portion of the HRS.

IVSR HARDWARE CHANGES

As mentioned earlier the hardware changes were minimum: 1) bellows design change from double leaves convolute to single leaf 2) addition of a pressure transducer (Taber) 3) pyrovalves from Pyronetics to Conax. All other components were same as for MPF.

The most prominent IPA design change involved the accumulator bellows. Senior Flexonics (SF) chose a thicker single-walled convolution over the MPF two thin-walled bellows as less likely to leak. In addtion, SF changed the bellows material from Inconel to AM350. Other notable differences were: 1) IPA structure mass optimization, 2) pressure transducer change from ground testing purposes (Entran Devices) to flight use (Taber), and 3) pyrovalve change from Pyronetics to Conax. All other components were same as those used on MPF.

THERMAL MODELING APPROACH

The HRS pump performance depends on the length and diameter of the plumbing as well as material. While the MER IPA was essentially the same as for MPF, the final flow rates predicted and observed using flight representative plumbing was in the order of 0.14 gpm which was lower than the 0.17 gpm predicted. Details on the test equipment developed for this purpose is available in Ref 6. Sensitivity analyses showed that this reduced flow rate translated to approximately 2 °C increase in the components which was insignificant.

The Integrated Pump Assembly (IPA), located in the cruise stage, cools the warm CFC-11 coming from the rover by circulating it over the cold radiators and then allows the cooled CFC-11 to flow through over the rover. As the spacecraft recedes further away from the sun on its way to Mars, the radiator becomes increasing cold. In order to avoid overcooling the rover electronics, the HRS design included a wax actuated bypass valve which progressively bypassed the radiator when the fluid temperature started falling below –7 °C. The schematic of the HRS is presented in Figure 5.

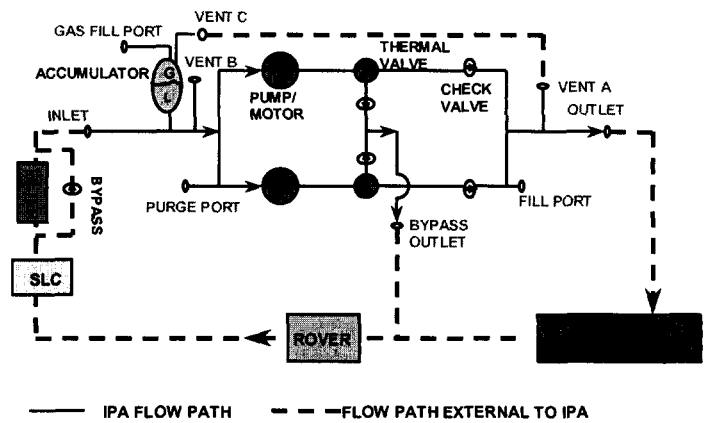

FIGURE 5. HRS schematic

The modeling was broken into two separate tasks – the radiation modeling, which was part of the overall cruise model, and a separate REM thermal model which was a high fidelity model covering the temperatures of the components on the REM face.

The radiator model used optical properties of 0.88 for the emissivity, 0.19 for the beginning-of-life solar absorptivity, and 0.30 for the end-of-life solar absorptivity.

The system-level model contained logic to simulate the flow of CFC-11, the variation in heat transfer coefficient to the radiators, and the action of the wax switch. Fortran statements sensed the temperature of the wax and diverted the flow to the radiators when the CFC-11 was warmer than 0°C, bypassed the radiators when the CFC-11 was colder than -7°C, and mixed the flow between 0°C and -7°C. Further logic operated on the portion of flow in the radiator tubes to derive the heat transfer coefficients. Heat transfer coefficients come from the Dittus-Boelter equation,

$$h = (k/d)*.023*(Re^{.8})*(Pr^{.33})$$ where

where h = Heat transfer coefficient
k = Thermal conductivity of the CFC-11
d = Inner diameter of the tube
Re = Reynolds number
Pr = Prandtl number

Heat loads from the sun and from the spacecraft were included in the system-level thermal model. Parasitic loads, in the form of conduction and radiation to the back of the radiators also came from the conduction and radiation networks of the system model.

The REM was assumed to be thermally isolated from the rest of the spacecraft which allowed the high fidelity REM modeling to be done independently. This assumption was acceptable because the REM is located within the WEB which was specifically designed to have minimum heat leaks on the mars environment.

The REM model was developed in TAS (Harvard Thermal, Inc.). Each face had 400 nodes and only conduction for the solid faces was considered. Since the REM was within an isolated WEB, it was safe to ignore heat radiation. TAS allows for the fluid flow elements to be modeled as nodes which are connected to the rest of the model through resistors. For each flow path, the product of the specific heat, density and volumetric flow rate of the fluid was entered. Modeling of the fluid path proved to be the most challenging aspect of the model, due to the complicated path and non-uniform lengths. Initially, there was no HRS tubing on the –X face due to real estate constraints, but the model indicated that AFT limits would be exceeded for the IMU and subsequently additional HRS run on the –X face was added.

The following assumptions were used in the steady-state model:

1. Cp for CFC-11 = 867 J/kg/K;; mdot = 0.015 kg/sec (based on flow = 0.606 lpm (0.16 gpm), density = 1500 kg/m^3).
2. Cp for Al 7050-T7451 = 157 J/kg
3. Eccobond 66C was used to bond the tube to the face surfaces. The minimum distance between the tube and faces was 0.010 in., and average integrated thickness was 0.015 in.
4. The +/- X,Y faces were tied to each other by 5 M4 bolts (resistance = 1.55 °C/watt). The +/- Z faces also had M4 bolts but were more in number. (7 for +/-Z face to +/-Y faces and 13 for +/-Z faces to +/- X faces).
5. Wall thickness was assumed to be 1.5 mm everywhere except under the IMU where it was 2.25 mm.
6. Power dissipation for the RPCU and RAD6K was assumed to be through the +Y face only due to the nature of the bracket used to support these two components.
7. There were 10 boards and the total power dissipation on the boards was 42 W, of which 76% was dissipated on +Y face and 24% on the –Y face (due to the RPCU and RAD6K boards which didn't span the entire length and have brackets which were tied to the –X face).
8. On the +X face, the SSPA power dissipation was 43W, SDST power dissipation was 15W; on the –X face the IMU dissipated 14.8W and the Battery RHU dissipated 3.6W.
9. The total heat to be removed from the REM was 125W.
10. For worst case close to Earth condition, the incoming CFC11 was at 10 °C and when MER approached Mars, the fluid temperature was approximately –15 °C.

Under these conditions, the model is shown in Figure 6 and results shown in Figure 7 and Table 2.

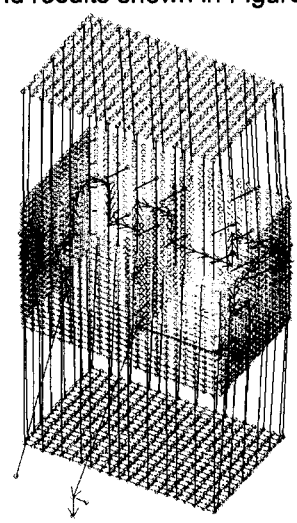

FIGURE 6. Model nodal representation.

A sensitivity analysis was performed to understand the effect of flow rate on the steady-state temperatures. Increasing the flow rate has the effect of increasing the heat removing capacity of the fluid as well as increasing the convective heat transfer coefficient. However, the effect was not dramatic and the results are presented in Table 2 with a focus on the IMU and SSPA only.

It can be seen that the effect of changing the flow rate does not have a uniform effect on SSPA and IMU. Since the IMU is the first component in the flow path, the fluid temperature is at the inlet condition, while at the SSPA the fluid has warmed up as it has picked up heat along the way. However, the peak temperature was less than 2 °C going from 0.17 gpm to 0.14 gpm. This was reassuring as it showed that the HRS was quite robust for changes in flow rate and hence provided the needed margin for model inaccuracies.

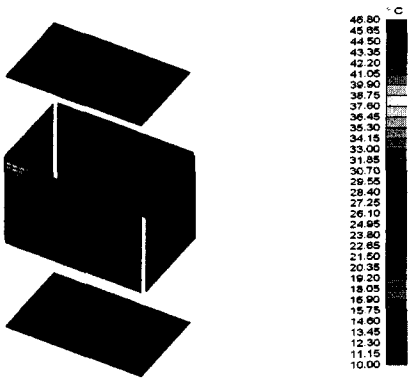

FIGURE 7. Model results for steady-state.

TABLE 2. Flow Rate Sensitivity on Instrument Temperatures

Flow (gpm)	IMU Peak (°C)	SSPA peak (°C)	Outlet temp (°C)	Out-In (°C)
0.17	38.06	38.04	18.8	8.8
0.16	38.39	38.52	19.38	9.38
0.15	38.64	38.8	19.85	9.85
0.14	39	39.37	20.55	10.55

Entry Descent Landing (EDL) Transient Analyses

After seven months of the cruise phase, the MER spacecraft transitioned to the EDL phase. A little over an hour before entry, the HRS system vented the CFC-11 to space in preparation for Cruise Stage Separation and landing on Mars. Once the CFC-11 was vented, the temperature rise of the components was determined by the duty cycle and the thermal capacities of the components. Thus, it was important to ensure that the components were at a low enough temperature at start of EDL to ride out the temperature rise during EDL.

The analysis for the EDL phase was more involved than the steady-state analysis as it used the mass of the components as well as duty cycle of the components as they came on and off during the EDL. The starting point for the EDL was the steady-state temperatures with the inlet fluid to the REM at –15 °C.

The modeling was done in two phases. In the first stage the steady-state model was run with inlet temperature of –15 °C obtained from the system-level model mentioned earlier. The results from this stage were then imported into the EDL model, where the flow elements were removed and the duty cycles of the power dissipation for all the components are included.

The SSPA and SDST were bolted to the REM faces through six M4 and eight M4 bolts respectively. They represented worst cases as it was assumed that all the heat transfer to the REM faces from the hot components occur only through the bolts, while in reality they occurred throughout the whole area of contact to some extent.

COMPARISON BETWEEN MODEL AND FLIGHT DATA

The spacecraft was instrumented with RTDs at key locations which provided the data for comparison. The location of the cruise stage and REM RTDs are shown in the Figures 8-16.

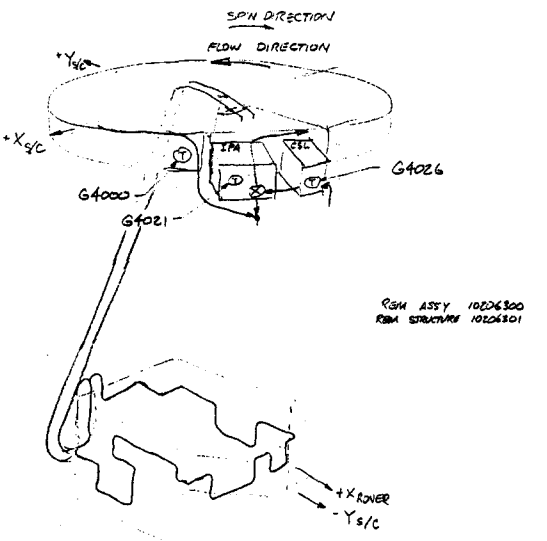

Figure 8. Orientation of HRS and location of cruise stage RTDs.

The RTDs on the IVSR are shown in Figure 9.

Figure 9. Location of PRTs in IVSR.

The PRTs on the REM +X face on the SSPA bracket (G-4054; maximum temperature on wall) and SDST bracket (G-4052) are shown in Figure 10. As the HRS lines are behind this face they are not shown.

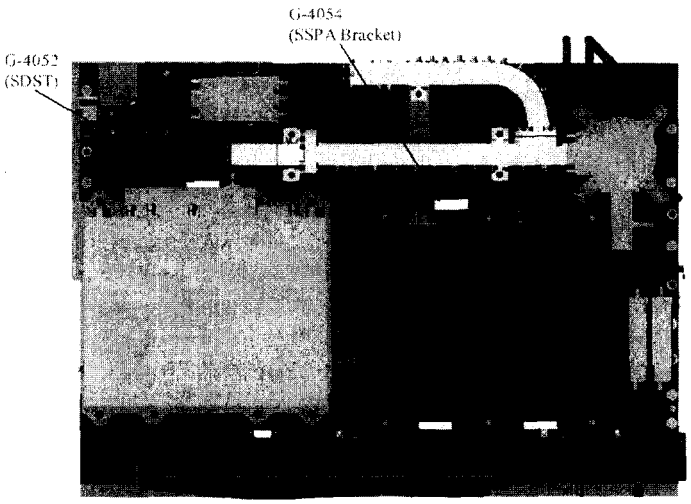

Figure 10. PRTs on +X face of REM

The PRT on the –X face for the IMU/UHF case temperature (G-4053) is shown in Figure 11.

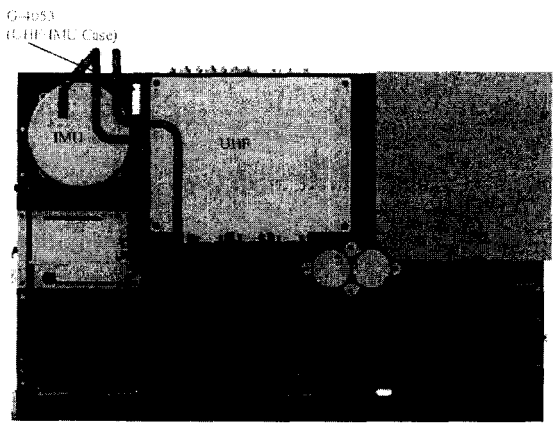

Figure 11 PRTs on –X face of REM

There was only one PRT on the –Y face as shown in Figure 12, and was the only one closest to the computer board. The computer board had its own internal RTD which is not shown in this figure or accounted for in the HRS PRT list.

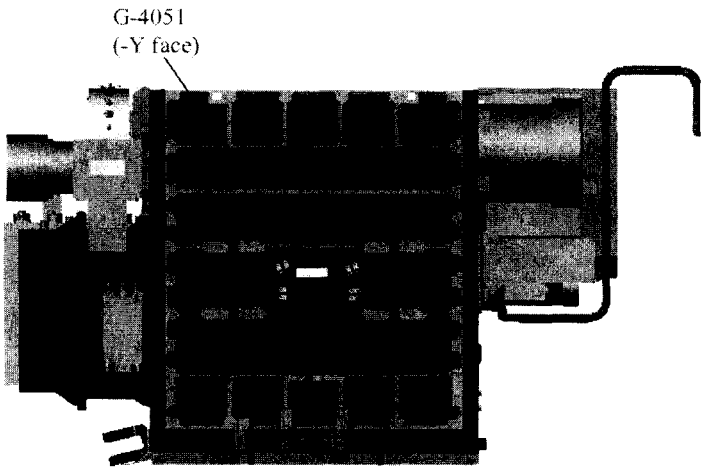

Figure 12. PRT on –Y face of REM.

Perhaps the most aggressive change in the MER HRS was the reduction in the number of radiator panels to ten from the twelve of the MPF program. Figure 17 shows flight data along with four predictions of radiator exit temperature. The Cruise Shunt Limiter Mounting temperature, G-4026, is upstream of the mixing valve. The HRS Integrated Pump Assembly, G-4021, is close to the mixing valve. The HRS Radiator temperature, G-4000, measures the exit temperature of the radiator loop.

Radiator area was critical in the days immediately after launch. At this time, the spacecraft was closest to the sun so the solar loading on the radiators and surrounding structure was high. Despite this loading, the system did not overheat. The radiator exit temperature was a maximum of –12°C, validating the ten-radiator design.

The first 25 days of flight showed evidence of IPA cooling. IPA cooling, and hence wax valve cooling, only occur when the temperature was above the control range of the valve. From 25 days on, the IPA temperature was controlled to a narrow band of –7 °C to 0 °C. This narrow band temperature operation was evidence that the fluid is in the control range of the valve. When in the control range, the valve diverted fluid to the bypass line, reducing the cooling capacity of the radiator loop. As an interesting side effect of the fluid bypassing the radiator periodically, the ACS noted changes in spin rate which

corresponded exactly with the times when the valve was activated to bypass.

Predictions of the HRS performance matched well for the early portion of the flight and diverge for the later portion. At 20 days, the predicted temperate was –14°C vs. a measured value of –15°C. At 197 days, the prediction was –54°C vs. a measurement of-64°C. This 10°C discrepancy, where the prediction was higher than the measurement, demonstrates the conservative nature of the MER design process. The prediction included worst-case electrical power, optical properties, and environmental loads, all of which were unlikely to occur simultaneously. Lower heat loads cause the valve to send less flow to the radiator loop, producing lower temperatures at the outlet of the loop. The predicted and actual HRS flight data over the mission for MER-B (Opportunity) are shown in Figure 13.

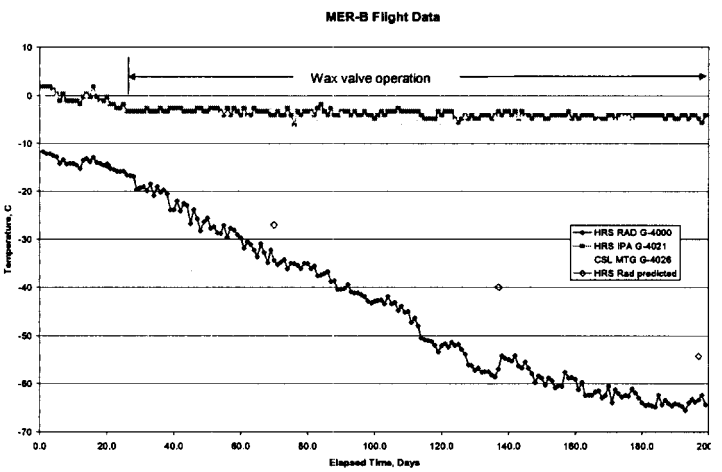

Figure 13. Predicted vs actual HRS radiator temperature for Opportunity

At the time of EDL, the inlet temperature to the REM was predicted to be around –15 °C. Data from Spirit indicated that the actual inlet temperature was between -8 °C and –3 °C. This indicated that the HRS thermal valve continued cycling right until EDL. The maximum temperature on the SSPA bracket was predicted to be ~ 10 °C, and the flight data indicated a temperature of 8 °C prior to EDL. The maximum temperature on the SDST was predicted to be around 0 °C prior to EDL while the actual temperature was ~ 1 °C. Thus, these flight data were almost exactly as predicted (see Figure 14). The predicted profiles were presented earlier in Ref 6. Unfortunately, there wasn't enough time-resolution on the actual EDL temperatures to determine how close the predicted and actual temperatures compared when the HRS had been jettisoned along with the cruise stage and the temperature rise on the components are driven by the thermal mass and the heat dissipation.

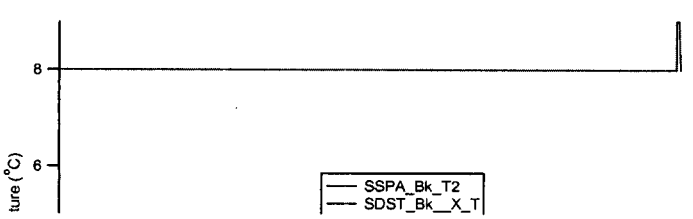

Figure 14. SSPA and SDST temperature from Jan 1st to 4th, 2004 on Spirit.

The flat profile on the SSPA in Figure 18 was an artifact of the telemetry and small fluctuations were not visible.

The venting of the HRS for both spacecraft went without a hitch and caused very minor perturbations to both spacecraft; the actual nutation induced on the spacecraft was seen to be in the order of 0.5 to 1 degrees, which was smaller than the 2.5 degrees observed on MPF.

SUMMARY AND CONCLUSIONS

The HRS systems on the Spirit and Opportunity spacecraft performed flawlessly which protected the rovers during their 7-month journey from earth to mars. Both rovers are currently on Mars as they transverse the surface performing their science. For most current information, the reader is advised to visit the JPL website at http://marsrovers.jpl.nasa.gov/.

ACKNOWLEDGMENTS

The research described in this paper was performed at the Jet Propulsion Laboratory, California Institute of Technology, Pasadena, under a contract with the National Aeronautics and Space Administration. The authors also wish to thank JPL personnel David Bame, Jack Patzold, Ray Kariger, Alex Mora, Jim Diener, Mike Kelley, Eddie Martinez, Joe Mora, Bob Path, John Shuping, Randy Williams, and Bob Zywan. Ray Kariger led the HRS technicians. Frank Picha oversaw the IVSR welding and integration. Paul McGrath served as the IPA technical contract monitor. Cynthia Lienweber, Michale Dare, John Biles, Encelmo Garcia, and John Henrikson provided CAE designer support. Masashi Mizukami performed qualification testing of the HRS flex lines. Kamesh Mantha oversaw the procurement of the pyro valves and unexpectedly passed away in July 2002.

REFERENCES

1. Bhandari, P., Birur, G., and Gram, M., "Mechanical Pumped Cooling Loop for Spacecraft Thermal Control," Paper No 961488, 26th International Conference on Environmental Systems, Monterey, California, July 8-11, 1996.

2. Birur, G.C. and Bhandari, P., "Mars Pathfinder Active Heat Rejection System: Successful Flight Demonstration of a Mechanically Pumped Cooling Loop," SAE Technical Paper No. 981684, 28th International Conference on Environmental Systems, Danvers, Massachusetts, July 13-16, 1998.
3. Birur, G., Bhandari, P., Gram, M, and Durkee, J., "Integrated Pump Assembly - An Active cooling System for Mars pathfinder Thermal Control," Paper No. 961489, 26th International Conference on Environmental Systems, Monterey, California, July 8-11, 1996.
4. Lam, L, Birur, G., and Bhandari, P., "Pumped Fluid Loops," Satellite Thermal Control Handbook (2nd edition), Edited by D. Gilmore, Aerospace Corporation, El Segundo, California, 2002.
5. Glenn Tsuyuki, Gani Ganapathi, David Bame, Jack Patzold, Richard Fisher, and Laurent Theriault, "The Hardware Challenges for the Mars Exploration Rover Heat Rejection System", presented at the Conference on Thermophysics in Microgravity, Session #A07, 'Thermal Control for Deep Space Missions', Space Technology and Application International Forum (STAIF) 2004, Albuquerque, NM
6. Ganapathi, G.B., Birur, G.C., Tsuyuki, G.T., McGrath, P.L., and Patzold, J.D., "Active Heat Rejection System on Mars Exploration Rover – Design Changes from Mars Pathfinder," Paper No. #142, Space Technology and Applications International Forum 2003, Albuquerque, NM, February 2003.
7. McGrath, P.L, "Integrated Pump Assembly, Mars Exploration Rover, Detailed Specfication for," JPL internal document ES518410, Revision A, dated February 15, 2001.

ACRONYMS

ACS: Attitude Control System
EDL: Entry, Descent, & Landing
HGAA: High Gain Antenna Assembly
HRS: Heat Rejection System
IEM: Integrated Electronics Module
IMU: Inertial Measurement Unit
IPA: Integrated Pump Assembly
IVSR: IPA, Vent, Shunt limiter and Radiator
KSC: Kennedy Space Center
LGA: Low Gain Antenna
LPA: Lander Petal Actuator
LST: Local Solar ime
MER: Mars Exploration Rover
MPF: Mars Pathfinder
MTES: Miniature Thermal Emission Spectrometer
PMA: Pancam Mast Assembly
PRT: Platinum Resistance Thermometer
RAD: Rocket Assisted Deceleration
REU: Remote Engineering Unit
REM: Rover Electronics Module
RTD: Resistance Temperature Device
RHU: Radioisotope Heater Unit
SSPA: Solid State Power Amplifier
W-hr: Watt-hour, a measure of energy usage
WEB: Warm Electronics Box