Fundamentals of Model-based Reasoning

1

Outline

- Introduction & Overview
- Model-based Programming
- Execution of Model-based Programs
- Fundamentals of Model-based Reasoning
  - Consistency-based diagnosis (GDE)
  - Pre-compilation & Probing
  - Livingstone/Titan
  - Conflict-Directed A*
- Modeling via State Analysis
- Advanced Methods
- Conclusion

2

Model-based Diagnosis

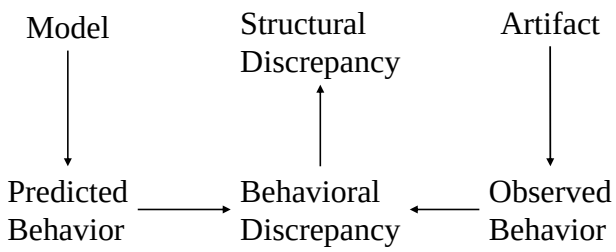

- Discrepancy between predicted and observed behavior indicates a fault.
- Structural discrepancy allows us to build fault candidates.
- Sort fault candidates in order of probability and perform additional tests to reject high probability candidates.

3

Simple Circuit with Multipliers & Adders

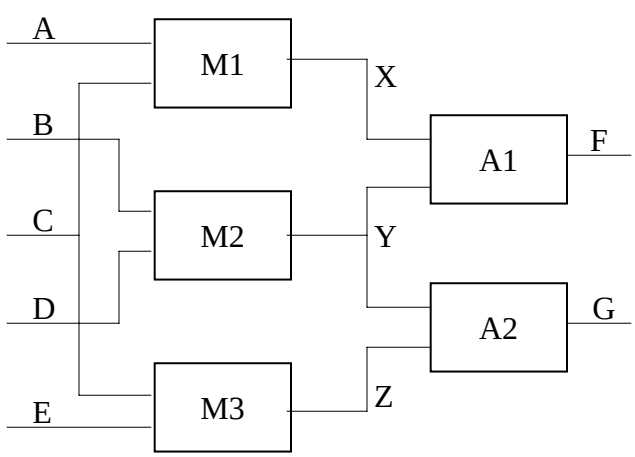

X, Y, and Z are not directly observable

4

Simple Circuit with Multipliers & Adders

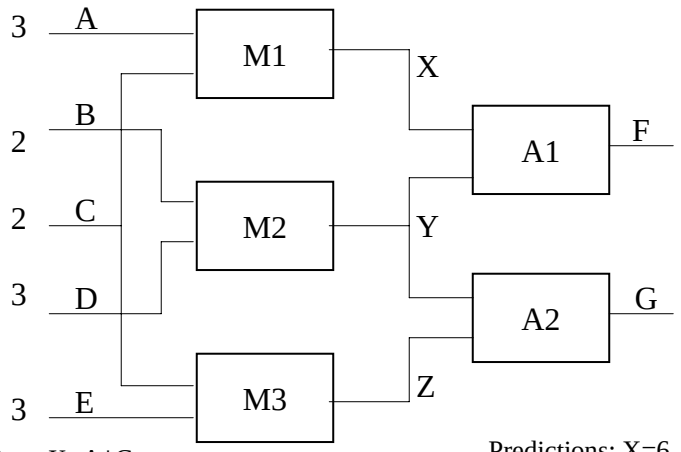

Constraints: X=A*C
Y=B*D
Z=C*E
F=X+Y
G=Y+Z

F=A*C+B*D

G=B*D+C*E

Predictions: X=6
Y=6
Z=6
F=12
G=12

5

Components

- Language for modeling the components and their structure (connections)
- Predictive inference engine (propagation)
- Diagnostic Engine
- Approach:
  - Find a sorted set of fault candidates.
  - Perform a sequence of tests that refine the fault candidate set.
  - Tests are expensive so select tests carefully.

6

Simple Circuit with Multipliers & Adders

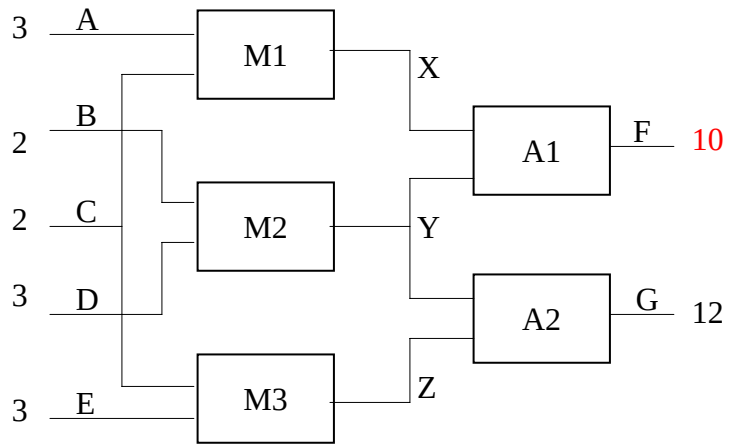

Candidates: [A1], [M1], [A2, M2], [M2, M3], …

Decreasing Probability

Test: X=6 Candidates: [A1], [A2, M2], [M2, M3], …
Test: Y=6 Candidates: [A1], …

7

Simple Circuit with Multipliers & Adders

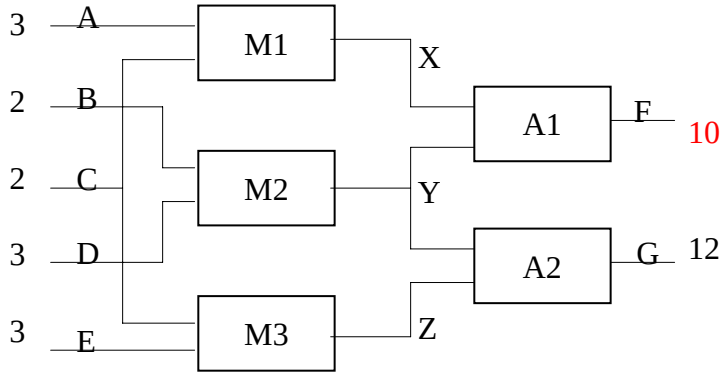

Candidates: [A1], [M1], [A2, M2], [M2, M3], …

Decreasing Probability

Test: X=6 Candidates: [A1], [A2, M2], [M2, M3], …
Test: Y=4 Candidates: [A2, M2], [M2, M3], …
Test: Z=8 Candidates: [M2, M3], …

8

Propagation

[A=3, {}] [B=2, {}] [C=2, {}] [D=3,{}] [E=3, {}]
[F=10, {}] [G=12, {}]
[F=12, {A1, M1, M2}]
[X=4, {A1,M2}{A1,A2,M3}
6, {M1}]
[Y=4, {A1,M1}
6, {M2}{A2,M3}]
[Z=8, {A1, A2, M1}
6, {M3}{A2,M2}]
[G=10, {A1,A2,M1,M3}
12, {A2,M2,M3}]

Two Conflicts

9

Possible Faulty Components

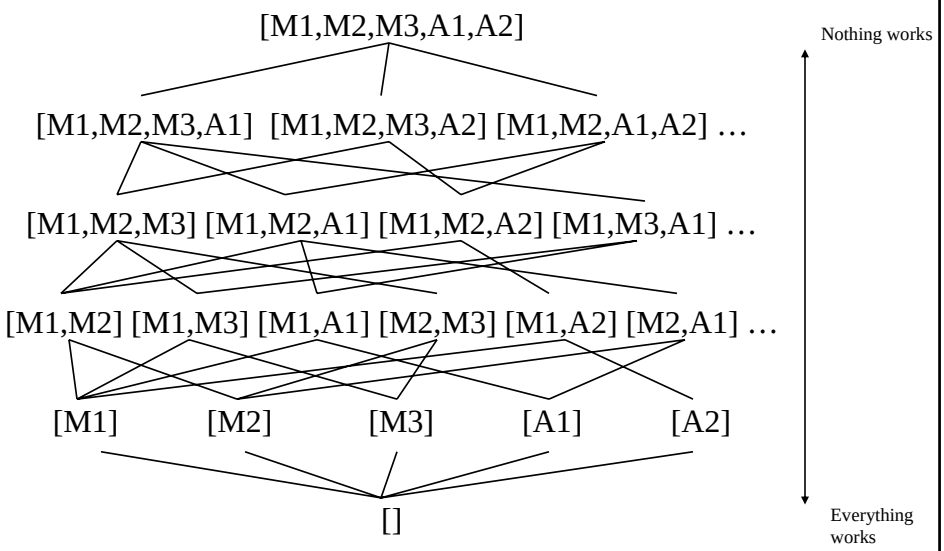

10

Kernel Diagnosis

Sub Diagnoses:

F=12, {[A1], [M1], [M2]}

G=10, {[A1], [A2], [M1], [M3]}

Kernel Diagnoses:

[A1]

[M1]

[M2,A2]

[M2,M3]

[A1] [M1] [M2,A2] [M2,M3]

11

Simple Circuit with Multipliers & Adders

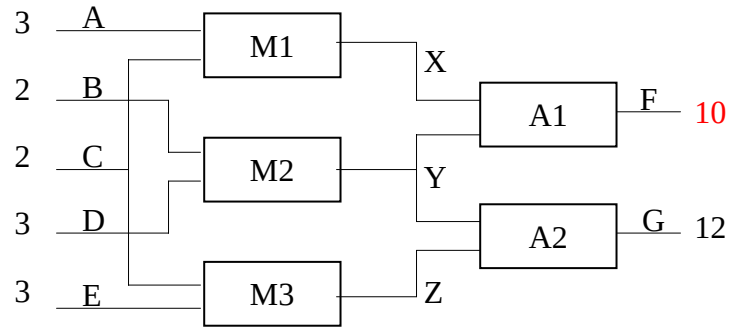

Candidate Generation: [] (everything working)

<[A1], [M1], [M2]> (from conflict F=10)

<[A1], [M1], [M2, A2], [M2, M3]> (G=12)

Note: [M2, M1] and [M2,A1] not included because they are supersets of [M1] and [A1].

12

Notes on Incremental Candidate Generation

- New measurements may increase or decrease the number of minimal candidates.
- Once a candidate is eliminated it can never reappear.
- Eliminated minimal candidates are replaced by larger candidates.
- If a component appears in every minimal candidate, that component is necessarily faulted.

13

Scalability

- For large systems the number of candidates can grow very large.
- We manage this using various techniques including:
  - Representing only the minimal candidates.
  - Restricting candidate generation to only consider ‘n’ faults.
- Push the hard work back to compile time to reduce runtime cost.

14

Pre-compilation Phase

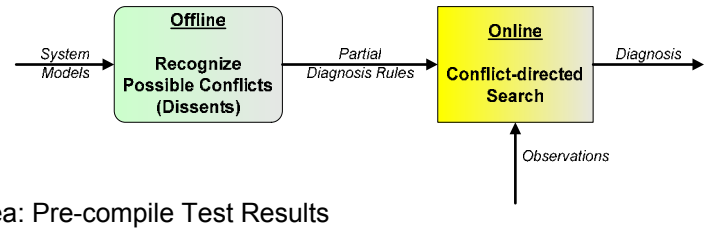

Idea: Pre-compile Test Results

1. Solve diagnosis sub-problems at compile-time, by generalizing GDE's conflict recognition.
2. Create run-time rules mapping observations to sub-diagnoses.
3. Given observations, synthesize **likely** global diagnoses.

Features:

- Shifts an NP-hard problem to compile-time.
- Sub-diagnoses tend to be small.
- Avoids generating large set of unlikely global diagnoses.
- Viewing decomposed rules aids engineering analysis

15

Active Probing/Measurements

- Select measurements that maximize the elimination of high probability candidates.
- Continue to select new measurements (tests) until all high probability faults have been found or until no more useful measurements can be taken.
- Objective: Find the correct candidate with the minimum total test cost.
  - The best next measurement is the one that minimizes the expected entropy of candidate probabilities resulting from the measurement.

De Kleer and Williams AIJ 1987 "Diagnosing Multiple Faults"

16

Example

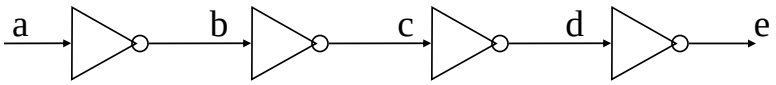

P=0.01

	a=1	a=1,e=0	a=1,e=1
a	1	1	1
b	.98	.45	.999
c	.96	.31	.998
d	.94	.44	.999
e	.93	1	1

Components with State

- So far we have considered stateless components.
  - Actually our components have had two states:
    1. Working (with constraints)
    2. Faulted (no constraints)
- Many components have multiple working states in addition to faulted state(s) for example:
  - Valves, Switches, Sockets, etc.
- We need to:
  - Represent the different working states along with their corresponding constraints.
  - Estimate what state our components are in given our measurements (when the state is not directly/completely observable).

Example: Propulsion Subsystem

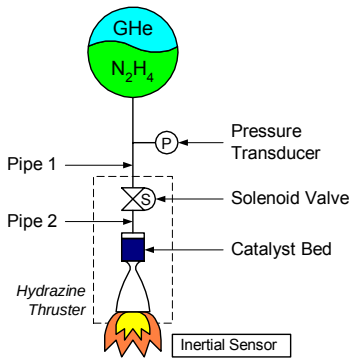

Variables:

- Observed
  - Pipe 1 Pressure (P1) – {*nom, low*}
  - Engine Thrust (TH) – {*on, off*}
- Hidden
  - Tank Pressure (TP)– {*nom, low*}
  - Pipe 2 Pressure (P2) – {*nom, low*}

Models:

- Solenoid Valve (V)
  - Modes – {O, C, U}*
  - O(V) ⇒ ((P1 = nom) ⇔ (P2 = nom)) ∧ ((P1 = low) ⇔ (P2 = low))
  - C(V) ⇒ (P2 = low)
  - U(V) ⇒ ( )
- Catalyst Bed (C)
  - Modes – {G, B, U}*
  - G(C) ⇒ ((P2 = nom) ⇔ (TH = on)) ∧ ((P2 = low) ⇔ (TH = off))
  - B(C) ⇒ (TH = off)
  - U(C) ⇒ ( )
- Pressure Transducer (T)
  - Modes – {G, SH, SL, U}*
  - G(T) ⇒ ((TP = nom) ⇔ (P1 = nom)) ∧ ((TP = low) ⇔ (P1 = low))
  - SH(T) ⇒ (P1 = nom)
  - SL(T) ⇒ (P1 = low)
  - U(T) ⇒ ( )

* All modes have an associated probability.

19

Pre-compile Possible Conflicts (Dissents)

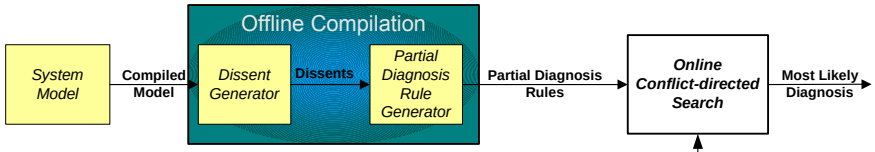

- Identify Dissents:
  - Dissent maps observations to conflicting modes:
  - (P1 = low) ∧ (T = on) ⇒ ¬ (G(T) ∧ O(V) ∧ G(C))
- Generate Partial Diagnosis Rules:
  - Replace conflicts with sub-diagnoses:
  - (P1 = low) ∧ (T = on) ⇒ (SH(T) ∨ SL(T) ∨ U(T) ∨ C(V) ∨ U(V) ∨ B(C) ∨ U(C))
- Compilation method:
  - Identify dissents by generating ***Prime Implicates*** containing only OBS and Modes.

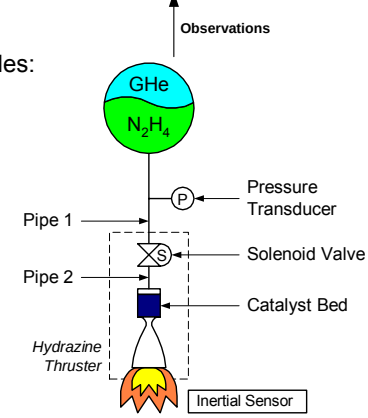

20

Find Likely Diagnoses On-line

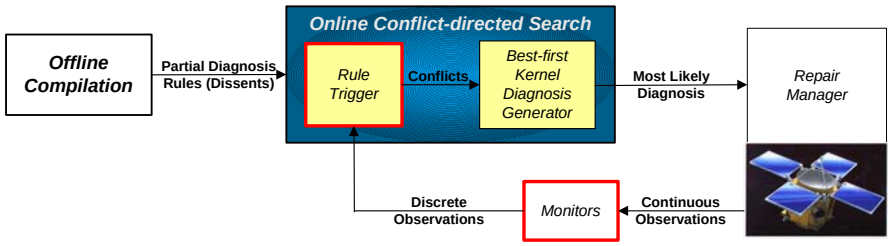

- Monitors generate discrete data
  - Value : Sensor Voltage = 23 V Sensor Voltage = nominal
- Monitors trigger Rules, … which produce sub-diagnoses
- (P1 = nom) $\wedge$ (T = off) $\Rightarrow$ SH(T) $\vee$ SL(T) $\vee$ U(T) $\vee$ C(V) $\vee$ U(V) $\vee$ B(C) $\vee$ U(C)
- (P1 = nom) $\Rightarrow$ G(T) $\vee$ SH(T) $\vee$ U(T)
- (P1 = low) $\Rightarrow$ G(T) $\vee$ SL(T) $\vee$ U(T)
- …

P1 = *nom* $\Rightarrow$ G(T) $\vee$ SH(T) $\vee$ U(T)

21

Online Conflict-directed Search

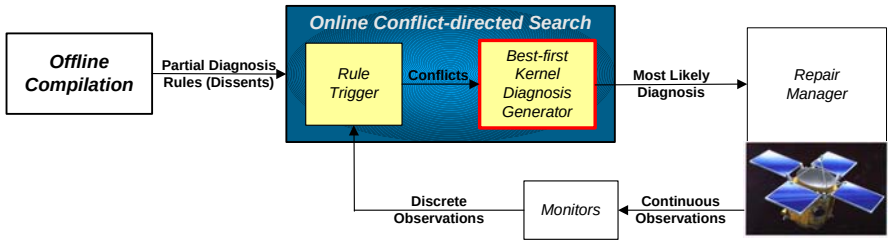

Search for most likely Kernel Diagnoses

- Find most likely covering of sub-diagnoses
- Guide set covering by A*search

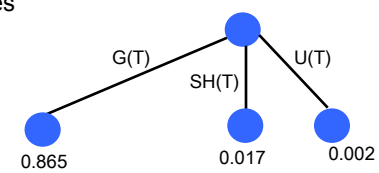

22

Example: Propulsion Subsystem

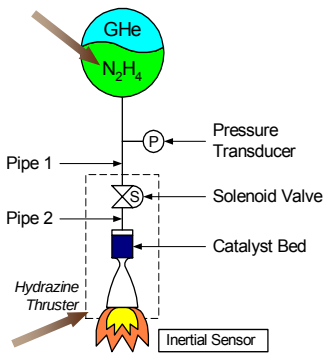

- Observations
  - P1 = low
  - TH = on

Example: Propulsion Subsystem

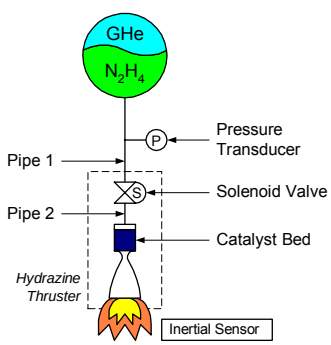

- Observations
  - P1 = low
  - TH = on
- Triggered Partial Diagnoses
  - G(C) ∨ U(C)
  - O(V) ∨ U(V)
  - G(T) ∨ SL(T) ∨ U(T)
  - SH(T) ∨ SL(T) ∨ U(T) ∨ C(V) ∨ U(V) ∨ B(C) ∨ U(C)
- Most-likely Diagnosis

Example: Propulsion Subsystem

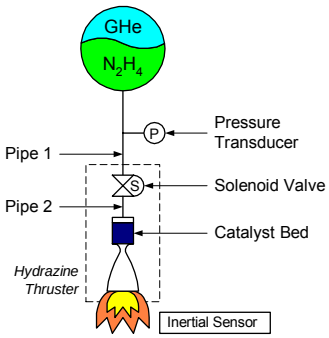

- Observations
  - P1 = low
  - TH = on
- Triggered Partial Diagnoses
  - G(C) ∨ U(C)
  - O(V) ∨ U(V)
  - G(T) ∨ SL(T) ∨ U(T)
  - SH(T) ∨ SL(T) ∨ U(T) ∨ C(V) ∨ U(V) ∨ B(C) ∨ U(C)
- Most-likely Diagnosis

25

Example: Propulsion Subsystem

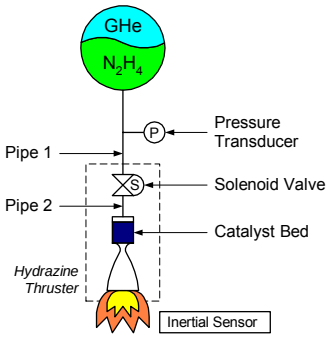

- Observations
  - P1 = low
  - T = on
- Triggered Partial Diagnoses
  - G(C) ∨ U(C)
  - O(V) ∨ U(V)
  - G(T) ∨ SL(T) ∨ U(T)
  - SH(T) ∨ SL(T) ∨ U(T) ∨ C(V) ∨ U(V) ∨ B(C) ∨ U(C)
- Most-likely Diagnosis

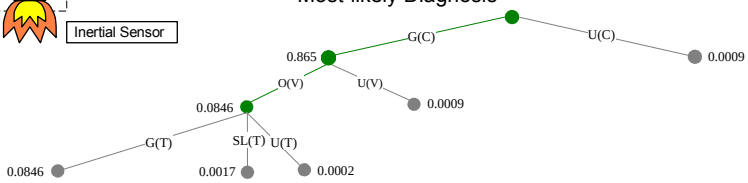

26

Example: Propulsion Subsystem

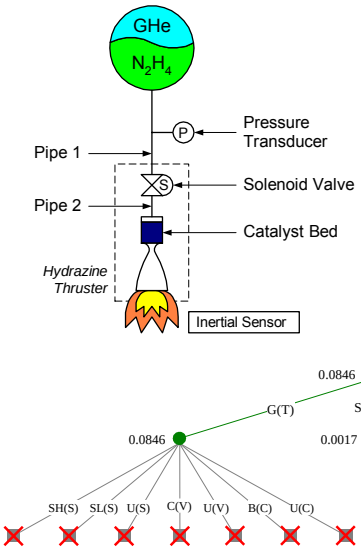

- Observations
  - P1 = low
  - T = on
- Triggered Partial Diagnoses
  - G(C) ∨ U(C)
  - O(V) ∨ U(V)
  - G(T) ∨ SL(T) ∨ U(T)
  - SH(T) ∨ SL(T) ∨ U(T) ∨ C(V) ∨ U(V) ∨ B(C) ∨ U(C)
- Most-likely Diagnosis

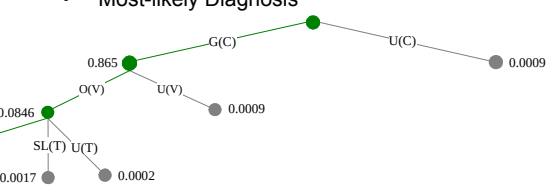

27

Example: Propulsion Subsystem

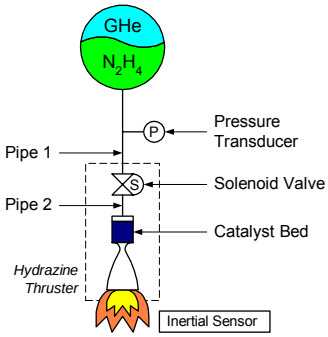

- Observations
  - P1 = low
  - T = on
- Triggered Partial Diagnoses
  - G(C) ∨ U(C)
  - O(V) ∨ U(V)
  - G(T) ∨ SL(T) ∨ U(T)
  - SH(T) ∨ SL(T) ∨ U(T) ∨ C(V) ∨ U(V) ∨ B(C) ∨ U(C)
- Most-likely Diagnosis

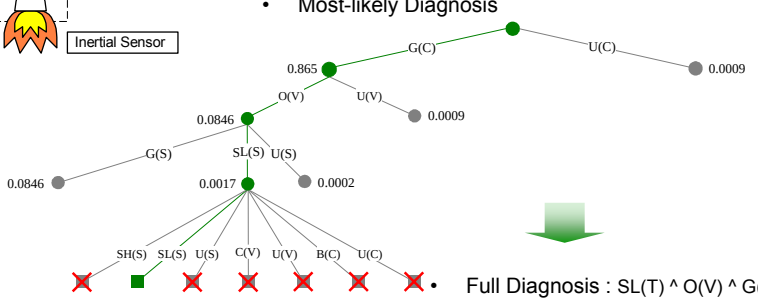

- Full Diagnosis : SL(T) ^ O(V) ^ G(C)

28

Conflict-directed, best-first, deductive kernel

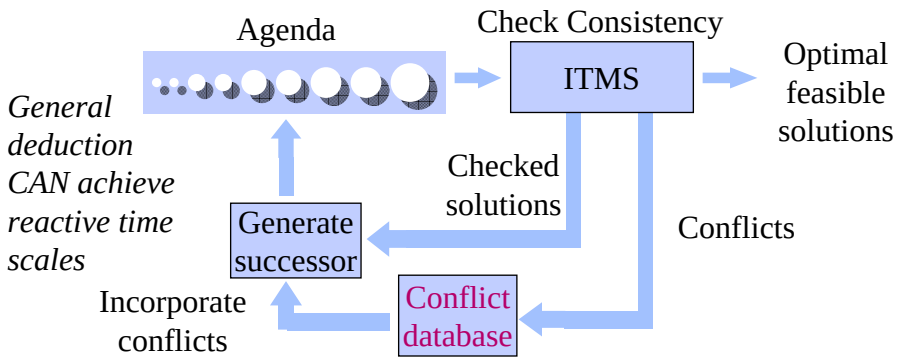

- Tasks & models compiled into propositional logic queries
- ITMS efficiently tracks state changes in truth assignments
- Conflicts dramatically focus search
- Careful enumeration grows agenda linearly

29

*Conflict-directed A**

When you have eliminated the impossible,
whatever remains, however improbable,
must be the truth.

- Sherlock Holmes. The Sign of the Four.

1. Test Hypothesis
2. If inconsistent, learn reason for inconsistency (a Conflict).
3. Use conflicts to leap over similarly infeasible options to next best hypothesis

Cd A* [Williams & Ragno, JDAM 05]
Livingstone [Williams & Nayak, AAAI 95]
Sherlock [de Kleer & Williams, IJCAI89]
DDB [Stallman & Sussman, 77]

30

Conflict-directed A*

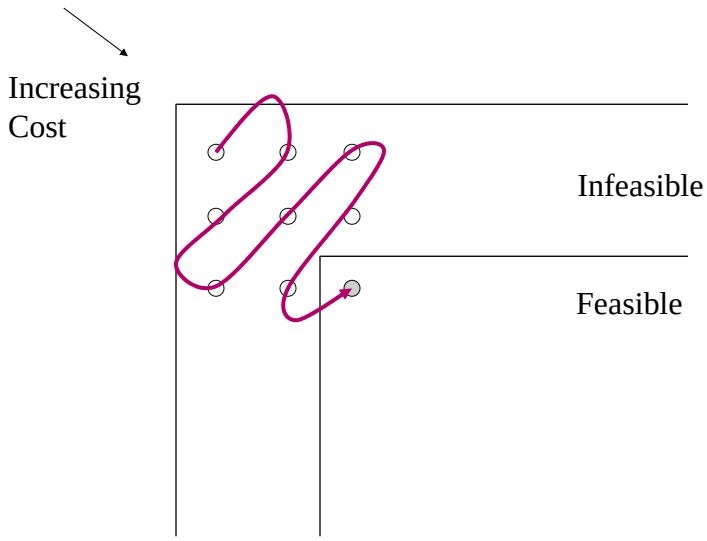

31

Conflict-directed A*

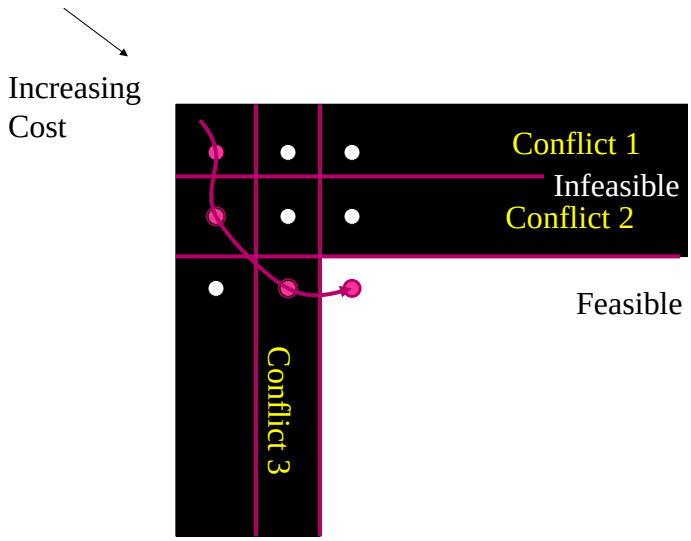

32

Conflict-directed A*

Function Conflict-directed-A*(*OCSP*)
returns the leading minimal cost solutions.
Conflicts[*OCSP*] ← {}
OCSP ← Initialize-Best-Kernels(*OCSP*)
Solutions[*OCSP*] ← {}
loop do
decision-state ← **Next-Best-State-Resolving-Conflicts(OCSP)**
if no decision-state returned or
Terminate?(*OCSP*)
then return Solutions[*OCSP*]
if Consistent?(C[*OCSP*], *decision-state)*
then add *decision-state* to Solutions[OCSP]
new-conflicts ← **Extract-Conflicts(CSP[OCSP], *decision-state*)**
Conflicts[OCSP] ← **Eliminate-Redundant-Conflicts (Conflicts[OCSP] ∪ new-conflicts)**
end

33

Conflict-directed A*

- Feasible subregions described by kernel assignments.

⇨ **Approach: Use conflicts to search for kernel assignment containing the best cost candidate.**

Increasing Cost

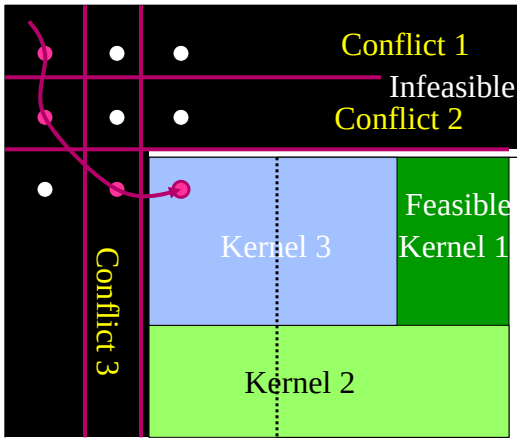

34

Next-Best-State-Resolving-Conflicts

```
function Next-Best-State-Resolving-Conflicts(OCSP)
  best-kernel ← Next-Best-Kernel(OCSP)
  if best-kernel = failure
    then return failure
    else return Kernel-Best-State[problem](best-kernel)
end

function Kernel-Best-State(kernel)
  unassigned ← all variables not assigned in kernel
  return kernel ∪{Best-Assignment(v) | v ∈ unassigned}
End
```

{M2=U}

{M1=G, M2=U, M3=G, A1=G, A2=G}

See [Williams & Ragno, JDAM 05] to find multiple leading solutions

35

Candidate Lattice

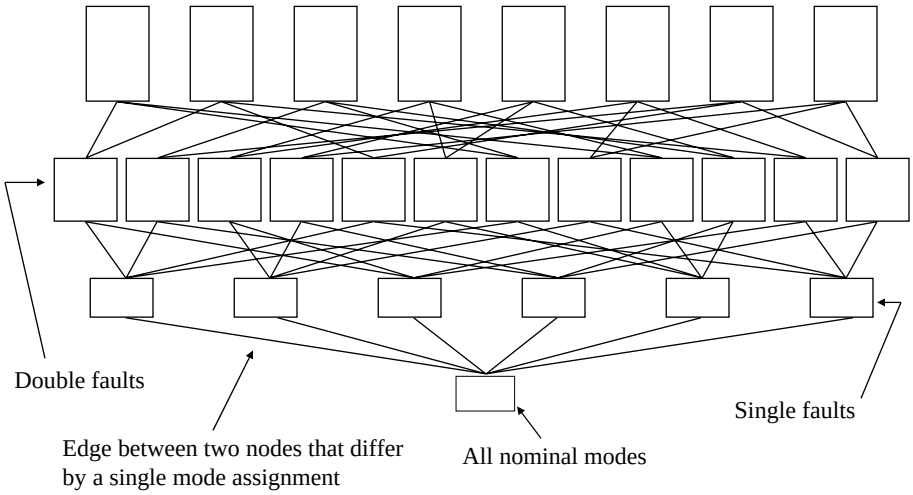

36

Best First Search

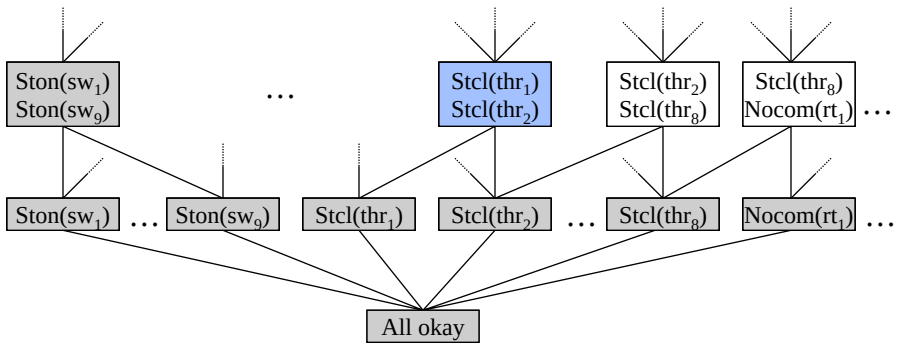

37

Conflict-Directed Best First Search

A *conflict* is an assignment to a *subset* of the variables that is inconsistent with the model and observations.

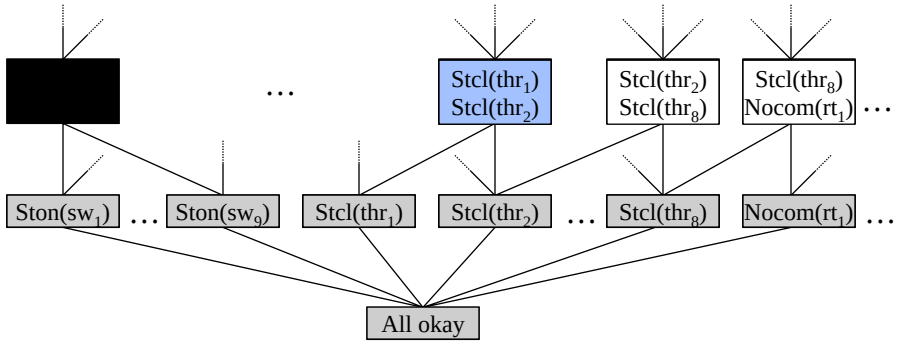

38

Optimizing the Agenda

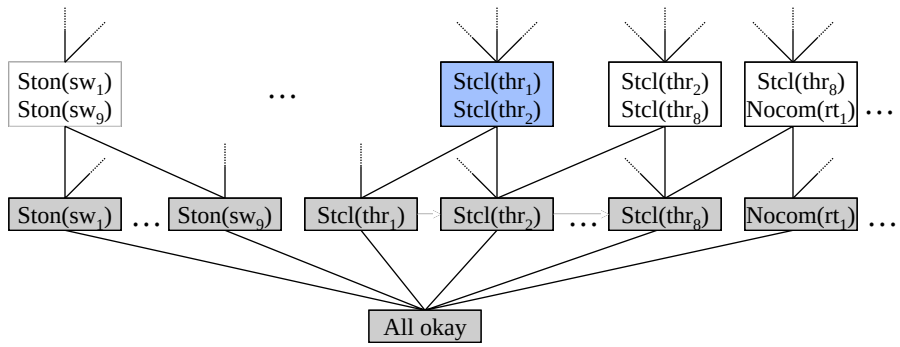

39

Frame Mode Estimation & Mode Reconfiguration as OCSPs

OCSP= <X,D_X, g_X,Y,D_Y, C(X,Y)>

- Decision variables X with domain D_X
- Utility function $g_X(X)$: $D_X \rightarrow \Re$
- State variables Y with domain D_Y
- Constraint C(X,Y): $D_X \times D_Y \rightarrow$ {True,False}

Find Leading $\arg\max_{X \in D_X} g(X)$

s.t. $\exists\, Y \in D_Y$ s.t. C(X,Y) is True

➔ $g_X()$ is a multi-attribute utility function that is preferentially independent.

40

Mutual Preferential Independence

Assignment δ_1 preferred over δ_2 if $g(\delta_1) < g(\delta_2)$

For $W \subseteq X$, the preference between two assignments to W is independent of the assignment to the remaining variables, W – X.

Example: Diagnosis: $g(X) = G(g_1(x_1), g_2(x_2), \ldots)$

$g_i(x_i = mode_{ij}) = P(x_i = mode_{ij})$

$G(u_1,u_2) = u_1 \times u_2$

If M1 = G is more likely than M1 = U,
prefer {M1 = G, M2 = G, M3 = U, A1 = G, A2 = G}
to {M1 = U, M2 = G, M3 = U, A1 = G, A2 = G}

41

Summary

- Early model-based diagnosis systems, like GDE, used consistency-based diagnosis to produce a set of feasible candidate solutions.
- State-of-the-art model-based executives, like Livingstone and Titan, leverage the Conflict-Directed A* algorithm to produce solutions in best-first order:
  - Probability-ordered for ME;
  - Cost-ordered for MR (GI).
- Pre-compilation of the most computationally expensive operations allows for improved online reactivity.

Up Next…

- Introduction to State Analysis
  - An overview of a Model-based Systems Engineering Methodology that is compatible with Model-based Programming
  - A discussion of how Model-based Programming fits into the project lifecycle