Cryogenic Testing of Planck Sorption Cooler Test Facility

B. Zhang, D. Pearson, J. Borders, B. Franklin, M. Prina and J. Hardy

Jet Propulsion Laboratory
Pasadena, CA 91109

D. Crumb
Swales Aerospace
Pasadena, CA 91107

ABSTRACT

A test facility has been upgraded in preparation for testing of two hydrogen sorption cryocoolers operating at 18/20 K. These sorption coolers are currently under development at the Jet Propulsion Laboratory (JPL) for the Planck mission sponsored by the European Space Agency (ESA). The two units share the same process and component design with different plumbing configurations required for spacecraft integration. Previous effort at JPL has led to the successful demonstration of a prototype of the sorption cooler. Each flight unit of the sorption cooler will be tested in a vacuum chamber with simulated background environment for the spacecraft. GM cryocoolers, bulk LN2, and a chiller unit are used to establish nominal temperature stages at 50, 100, and 280 K, respectively, allowing the cold end of the sorption cooler to operate at 18/20 K.

This work summarizes the scope of the test facility upgrade, including design for cryogenic cooling power delivery, system thermal management, insulation schemes, and data acquisition techniques. Ground support equipment for the sorption coolers, structural features of the test chamber, and the vacuum system involved for system testing will also be described in detail.

INTRODUCTION

Two Planck Sorption Cooler units are to be tested at the Planck test facility. The facility has been upgraded from the Engineering Breadboard (EBB) configuration to the current configuration for the testing of flight sorption cooler units.

The two units share the same process and component design with different plumbing configurations required for spacecraft integration. Previous effort had led to successful demonstration of a prototype of the sorption cooler. Each flight unit of the sorption cooler will be tested in a vacuum chamber with simulated background environment for the spacecraft. Two Gifford-McMahon (GM) cryocoolers, bulk liquid nitrogen (LN2), and a chiller unit are used to establish nominal temperature stages at 50, 100, and 280 K, respectively, allowing the cold end of the sorption cooler to operate at 18/20 K.

The sorption cooler incorporates hydrogen hydride compressor technology [3] with Joule-Thomson refrigerator in the cold end and hence eliminates moving parts in both the warm and cold ends. This type of configuration is especially suitable for certain space applications where low vibration levels are crucial.

TEST OBJECTIVES

Objectives for the cryogenic test are to verify chamber vacuum system integrity and cryogenic cooling capabilities for simulating operating environment of the flight hardware. Specifics are summarized as follows:

- Vacuum leak rate < 1.0×10^{-12} atm.- cc/s
- Ultimate chamber pressure < 1.0×10^{-6} torr
- Temperature of 50 K shroud reaches 90 K within 48 hours
- All other temperatures reach 90 K within 24 hours
- Temperature at PC3C reaches 45 K within 24 hours.
- 100 K plate temperature < 120 K
- 50 K plate temperature < 60 K within 7 days
- PC3C < 40 K with zero power input
- PC3C < 45 K with 3 W applied
- PC3A and B < 60 K
- 50 K shroud temperature < 45 K
- LN2 tank holding time > 72 hours.

CHAMBER DESCRIPTION

The test chamber has an outer diameter of 1.8 m with an internal height of 2.8 m, which provides sufficient room to accommodate the testing of the sorption coolers.

Structural Features and Analysis

As shown in Figure 1, the 50 K (V3) plate of the Piping and Cold End (PACE) assembly is supported by four struts which therefore bear almost the entire weight of PACE. These struts are secured to the 100 K plate. The 100 K shroud is supported by the 100 K plate. The bottom flange of the 100 K shroud is bolted to the 100 K plate. Together they form the enclosure for the 50 K stage. The LN2 tank is both mechanically and thermally attached to the top of the 100 K shroud. Six posts sit on top of a base plate and support the 100 K plate. The Sorption Cooler Compressor (SCC) and Chiller Panel Assembly (CPA) will be bolted down to the base plate. Finally, the base plate is supported by three pads at the bottom of the vacuum chamber. These pads are situated directly above the three legs of the chamber. Detailed description and design analysis for the chamber structure are given in [4].

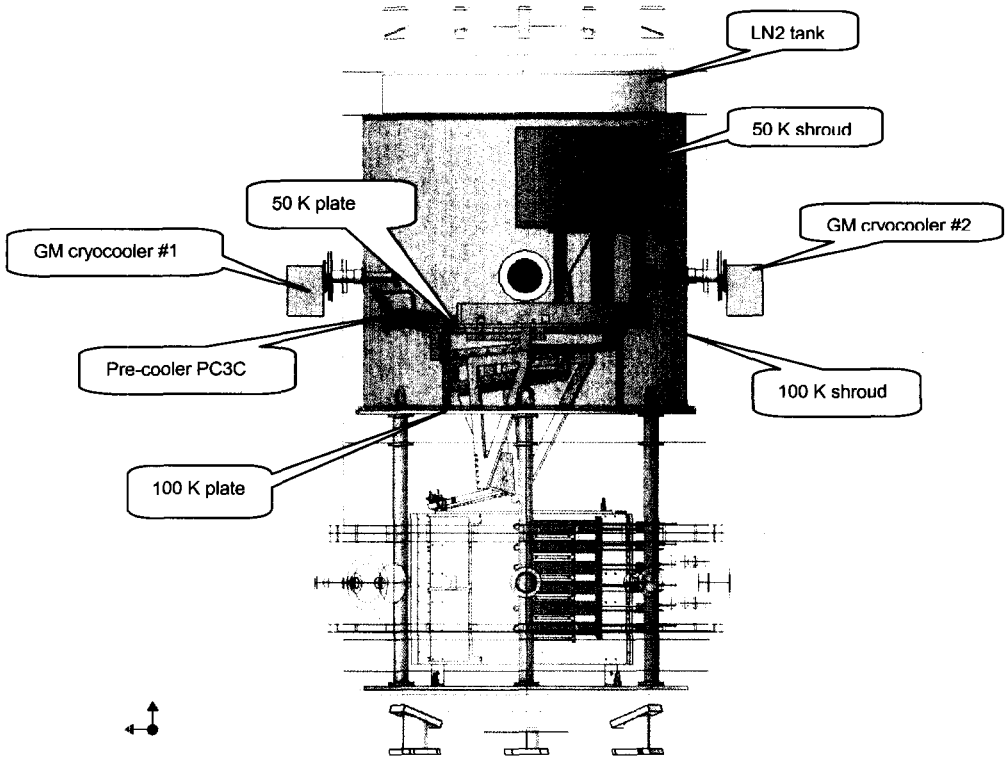

Figure 1. Test chamber schematic.

Thermal Design

For the cryogenic test alone, two temperature stages are established inside the test chamber for thermal management. Nominal temperatures for these stages are set at 50 K and 100 K. Two additional stages at 18/20 K and 260 K will be further established for flight hardware testing.

The 50 K stage is cooled by two GM cryocoolers, while the 100 K stage is cooled by the LN2 tank. LN2 precoolers are installed in 50 K and 100 K plates to accelerate the initial cool down from ambient temperature to 90 K. Cooling power from these GM cryocoolers are delivered through flexible thermal straps and solid thermal bus bars. The thermal strap is made of braided multi-strand copper wires. Each strap consists of 1000 wires with a nominal diameter of 0.01 in. The straps are individually trimmed to length in order to reduce their thermal impedance.

Substantial amount of multilayer insulation (MLI) has been installed in the vacuum chamber for thermal insulation of the 50 K and 100 K temperature stages. Each blanket consists of 20 alternating layers of 0.5 mil, perforated aluminized mylar and Dacron spacer material. Detailed thermal system management schemes and chamber thermal analysis are given in [5].

Facility and Testing Equipment

Supporting equipment for the test chamber includes vacuum pumps and cooling equipment including cryogenic cooling equipment.

A vacuum pump (Stokes Model 212-11) equipped with a roots blower (Stokes Model 607-1) serves as the main roughing pump for the chamber. The throughput of the pump is rated at 150 cfm, while the roots blower is rated at 600 cfm with an ultimate below milli-torr vacuum level.

A turbo molecular pump or TMP (Seiko Seiki Model STP400) handles pumping in the high vacuum range. The TMP has a pumping speed of 420 liter/s for nitrogen at vacuum levels below 1.0×10^{-4} torr. The TMP is backed up by an explosion-proof rotary pump (Edwards Model E2M30FX). A solenoid valve between the TMP and the fore-line pump closes in the event of power failure to prevent system contamination due to oil back streaming from the fore-line pump.

A chiller (BOC Edwards Model TCU 40/80) removes the heater input power of the sorption compressor elements. The TCU 40/80 is a single-channel temperature control unit with a

cooling capacity of 350 W at –40 °C or 2000 W at –20 °C. The chiller unit was not used during the cryo-test.

Two GM cryocoolers of the same model (CTI Model 1020 Cryodyne) maintain the operating temperature of the precoolers (PC1-3) and the 50 K stage environment. The 1020 is a two-stage regenerative type cryocooler. With a 10-W heat load applied to the first-stage cold station at 42 K, it is capable of lifting 4 W at 14.5 K or 15 W at 26 K at the second stage. The first-stage cooling capacity reaches a maximum of 50 W at 93 K while the second stage capacity remains the same.

A 300-liter liquid nitrogen tank sits on top of the 100 K shroud and cools the entire 100 K stage. During normal operation, this LN2 tank needs to be filled once a week. Gas nitrogen is exhausted through a vent stack to atmosphere outside the test facility. LN2 Pre-cooling loops are mounted on the 50 K and 100 K plates to speed up the initial cool-down. These cooling loops will be shut off and evacuated once the plates cool down to below 90 K.

Instrumentation and Data Acquisition

Temperature sensors are strategically located in the chamber to collect data at all temperature stages. Heaters are used to maintain preset temperature levels at PC3C, 50 K shroud, and 50 K plate.

The high vacuum range is monitored by hot and cold cathode gauges, while the rough vacuum end is covered by a mechanical pressure gauge (Leybold Diavac DV1000).

A data acquisition system based on Labview logs readings from temperature sensors and power input to instrument heaters.

As a critical element of the cryogenic testing, pre-cooler PC3C is equipped with temperature sensors and heaters to simulate the operating condition of the sorption cooler. A photo of PC3C mounted on its MGSE is shown in Figure 2. PC3C is bolted to its MGSE by eighteen M4 stainless steel bolt. These bolts are lubricated and torqued to 5 in-lbf to achieve a compression of 286 lbf per bolt to avoid reaching the yield point of copper. Heaters mounted on PC3C side and temperature sensors mounted on both PC3C and its MGSE sides allow a rough assessment of temperature drop across their interface. The surface of PC3C is gold coated to improve thermal contact at the interface with its MGSE.

The MGSE plate for PC3C is anchored to the 50 K plate via a wedge piece made of G10 material to reduce parasitic heat leak from the 50 K plate.

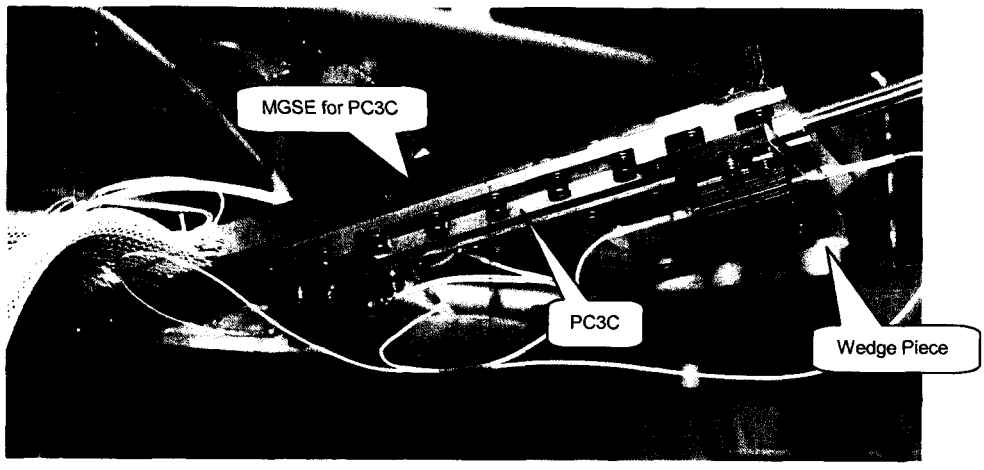

Figure 2. Instrumentation for PC3C.

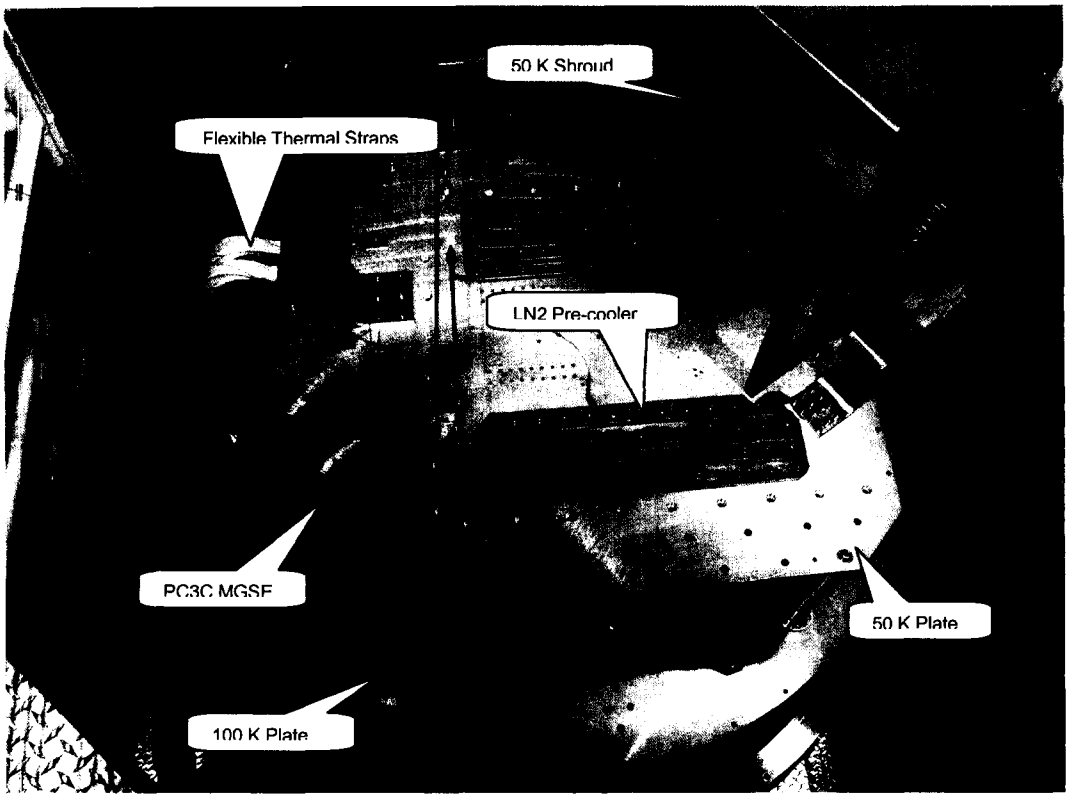

Figure 3. Top view of chamber setup.

Test Setup

A photo of the chamber top view is presented in Figure 3 with major elements called out as shown. The dummy 50 K plate built solely for the cryogenic test will be replace by the PACE assembly for sorption cooler system test. The rest shown in the photo are actual MGSE parts to be used for flight hardware test.

TEST RESULTS

The cryogenic test commenced in late January of 2004 and completed in less than ten days. Experimental data including temperature readings and heater input power were continuously recorded. Selective data reflecting typical operating environment are presented in this sections.

Chamber Cool-down

During the initial vacuum pump-down, warm nitrogen gas (GN2) was used to back-fill the chamber. This process was repeated three times and each time the chamber pressure was cycled between 10^{-2} torr and 300 ~ 500 torr. The two GM cryocoolers were turned on once the chamber vacuum level was brought down to below 10^{-5} torr by the turbo molecular pump. Immediately following that, liquid nitrogen from an external storage tank was supplied to run the pro-coolers and to fill the LN2 tank.

The 50 K and 100 K stages (with the exception of the 50 K shroud) were cooled down to 90 K within a day. The 50 K shroud was cooled down by the second stage of GM #2 alone without any LN2 pre-cooling. It took less than 42 hours for the rear side of the shroud to reach 90 K, but slightly more than 4 days to reach 20 K.

Temperature readings from all sensors during the cool-down and cryogenic test are graphically presented in Figure 4.

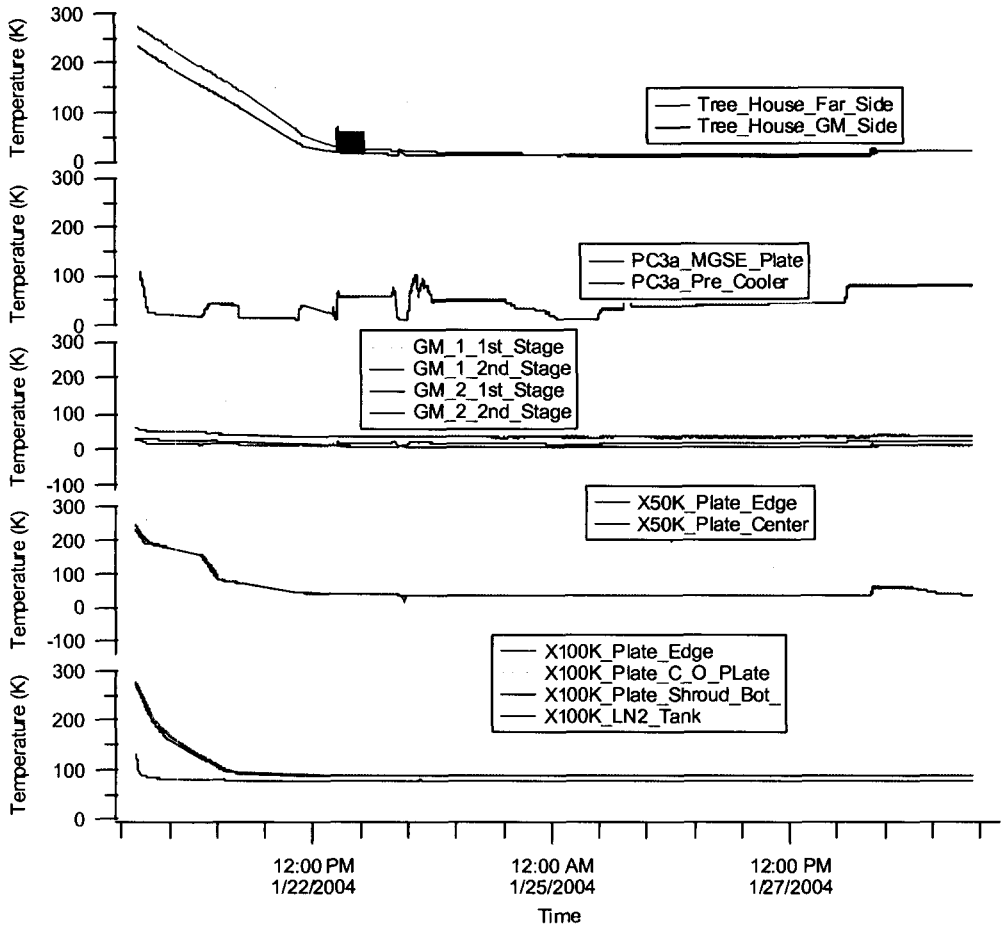

Figure 4. Temperature data collected during cryogenic test.

Temperature Control at PC3C

The temperature at pre-cooler PC3C is controlled by the Proportional Integral and Derivative (PID) algorithm of Labview. Heaters are used to simulate the actual cooling requirement of approximately 3 W. At zero heater input power, the temperature at PC3C bottomed out below 13 K. The heater input power was subsequently ramped up in several steps and reached a maximum of 10 W, exceeding the required level by more than a factor of three. The additional power elevated the temperature at PC3C and made it possible to test the sorption cooler with PC3C running at temperatures up to 70 K.

Two temperature sensors on each side of the interface between PC3C and its mechanical ground support equipment (MGSE) are located approximately 80 mm apart. As such, the difference between their readings (ΔT_{Total}) includes not only the temperature drop across the interface, designated by $\Delta T_{Interface}$, but also the temperature drop through the 80-mm spacing in the MGSE plate. The later was then analytically evaluated and subtracted from ΔT_{Total} to obtain $\Delta T_{Interface}$. The dependence of these temperature differences on input power can be best described in polynomial terms through regression as follows:

$$\Delta T_{Total} = 0.0049\dot{Q}^3 - 0.0329\dot{Q}^2 + 0.197\dot{Q} + 0.0106 \quad (1)$$

$$\Delta T_{Interface} = 0.0079\dot{Q}^2 + 0.0026\dot{Q} + 0.0507 \quad (2)$$

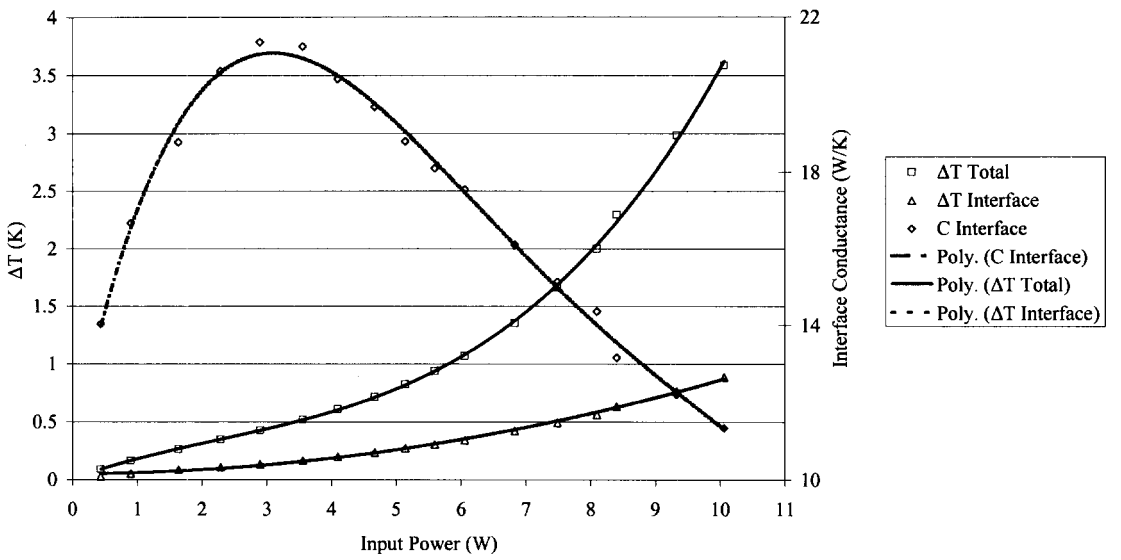

Figure 5. Temperature control at PC3C.

The conductance across the interface $C_{Interface}$ is also calculated and plotted in **Figure 5** as a function of heater input power. The data points can be best fitted with the following fourth order polynomial:

$$C_{Interface} = -0.0055\dot{Q}^4 + 0.1746\dot{Q}^3 - 1.9867\dot{Q}^2 + 7.931\dot{Q} + 10.886 \quad \textbf{(3)}$$

Temperature Control at 50 K Shroud

Heaters mounted on the 50 K shroud allow the control of the shroud temperature. To simulate the operating environment of the spacecraft, the heater mounted on the front end of the shroud was turned on at 1.814 W. Temperature readings at this input power level and those at zero input power are given in Table 1.

Temperature Control at 50 K Plate

Temperature readings from sensors on the 50 K plate and GM#2 first stage are given in Table 2 at zero and 13.91 W heater input power, respectively.

Table 1. Temperature control at 50 K shroud.

Sensor Designation	Temperature (K)	
	Power = 0 W	Power = 1.814 W
GM #2, 2nd stage	7.7	10.2
50 K shroud, front	11.14	18.5
50 K shroud, rear	13.57	20.2

Table 2. Temperatures control at 50 K plate.

Sensor Designation	Temperature (K)	
	Power = 0 W	Power = 13.91 W
GM #2, 1st stage	35.01	39.65
50 K plate, center	36.45	59.47
50 K plate, edge	36.56	59.99

Vacuum System Integrity

The vacuum system integrity was successfully verified through the cryogenic test. The chamber had no detectible leak that could be picked up by a helium leak detector with a sensitivity of 1.0×10^{-12} atm-cc/s. In the initial pump-down, the chamber vacuum reached levels at 10^{-3} torr and 10^{-6} torr in two hours and twenty-four hours, respectively. The ultimate chamber vacuum ever reached was 6.7×10^{-7} torr.

LN2 Tank Holding Time

The LN2 tank has a capacity of approximately 300 liters. The holding time of the tank under normal operation directly reflects the parasitic heat leak into the 100 K stage. The recorded holding time was more than a week (177 hours) after it was filled the last time. This translates into a boil-off rate close to 0.381 g/s, or a heat leak of 74.7 W. It should be noted that part of this heat leak directly entered the LN2 tank from the top of the chamber and had no impact on the thermal performance of the 100 K stage.

DATA ANALYSIS

Conductance of Thermal Straps

As mentioned previously, cryogenic cooling power from the GM cryocoolers was delivered to the 50 K stage through flexible copper thermal straps. Thermal conductivity of copper is a strong function of temperature at cryogenic temperatures. This temperature dependence becomes most significant around 20 K. To correlate experimental data with theoretical predictions, temperature readings from three thermal straps are analyzed. These straps are used to cool PC3C, the 50 K shroud, and the 50 K plate. For each strap, temperature readings from sensors attached to both ends are used in conjunction with heater input power and strap geometry to obtain a value for the thermal conductivity integral over the temperature range experienced by the strap based on the equation

$$\int_{T_{GM}}^{T_{LOAD}} k dT = \frac{\dot{Q}}{A/L} \tag{4}$$

where k is thermal conductivity; T_{LOAD} and T_{GM} are temperatures at the load and GM cold head, respectively; $\dot{Q}$ is the heater power input, A is the cross-sectional area of the strap, and L is the length of the strap. Once the value of the thermal conductivity integral is calculated, it is then compared with that generated by a commercial database CRYOCOMP [6] through an iteration process to determine the ratio of residue resistance or RRR value for the strap. The RRR values calculated in this way for the three thermal straps are given in Figure 6. To estimate the parasitic heat leak at zero heater input power, a conductivity integral is generated by CRYOCOMP by using temperature readings and a RRR value either interpolated or extrapolated from all the RRR values calculated at various input power levels.

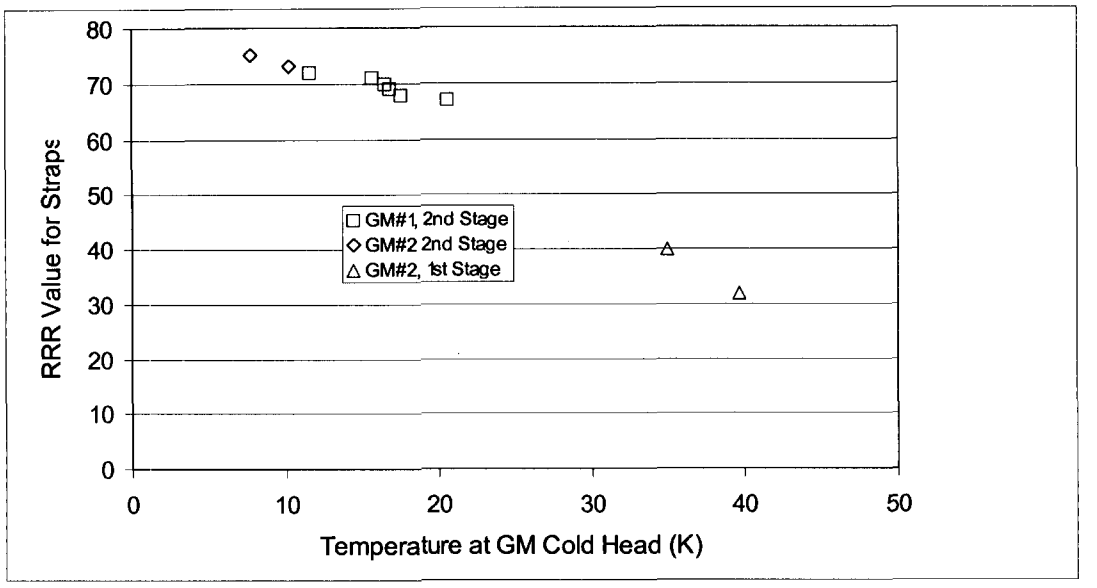

Figure 6. RRR values calculated for three thermal straps.

Heat Leak Summary

Parasitic heat leaks into the system are estimated mostly based experimental data. For system components cooled by flexible copper thermal straps, thermal properties for copper derived from CRYOCOMP are used. Heat leak into the 100 K stage is calculated from the boil-off rate of liquid nitrogen in the LN2 tank. Heat leaks are summarized in Table 3.

Due to the small size of PC3C, heat leak through the MLI blanket is negligible. The total heat leak of 0.28 W can be considered to come from the G10 wedge piece that supports PC3C over the 50 K plate. Neglecting the conduction through three G10 legs, heat leak into the 50 K shroud is through the MLI blanket. Considering a surface area of 1.6 m^2, the average heat leak per unit surface area is approximately 0.48 W/m^2. Among the 1.5 W heat leak into the 50 K plate, 0.69 W are attributed to the four stainless steel struts. This value is analytically evaluated based on the strut geometry and conductivity integral at the actual temperature boundary conditions of 36 K and 90 K. Over an approximate surface area of 2.66 m^2 (1.33 m^2 per side) for the 50 K plate, the average heat leak through the 50 K plate MLI blanket is about 0.3 W/m^2.

To estimate the heat leak into the 100 K stage excluding the LN2 tank, heat flux along the shroud is roughly assessed by considering conduction alone. Using the ratio of cross-sectional area over length for the shroud at 0.22 m and temperature boundary conditions at 77.8 and 88.86 K, a thermal conductivity integral is evaluated at 1300 W/m, which yields a heat transfer rate at 28.19 W.

Conduction through the six posts supporting the 100 K stage is estimated at 8.68 W. Subtracting this amount of heat leak, the heat leak through the MLI blankets becomes 19.51 W. The total surface area of the 100 K stage exposed to the 300 K environment is about 9.34 m^2. The average heat leak over unit area of MLI blanket is about 2.1 W/m^2. It should be noted that this approach underestimates the actual heat leak through the MLI blankets since it neglected the interaction of radiation and conduction along the shroud. Heat leaks into different temperature stages are summarized in Table 3.

Table 3. Test facility heat leak summary.

Temperature Stage	Cooling Source	Heat Leak (W)
PC3C	GM #1, 2nd stage	0.28
50 K Shroud	GM #2, 2nd stage	0.77
50 K plate	GM # 1 and #2, 1st stage	1.5
100 K stage	LN2 tank	74.7

Table 4. Comparison of test results with objectives.

Performance Criterion	Test Objective	Results
Chamber vacuum leak rate	< 1.0 x 10^{-12} atm.-cc/s	< 1.0 x 10^{-12} atm.-cc/s
Ultimate chamber vacuum	< 1.0 x 10^{-6} torr	6.7 x 10^{-7} torr
50 K shroud reaches 90 K	48 hrs	41.5 hrs
50 K stage reaches 90 K	24 hrs	12 hrs
100 K stage reaches 90 K	24 hrs	13.7 hrs
50 K plate reaches 60 K	7 days	49.2 hrs
PC3C reaches 45 K	24 hrs	7.7 hrs
PC3C no-load temperature	< 40 K	13 K
PC3C operating temperature	< 45 K at 3 W	< 32 K at 4.67 W
PC3A and B operating temperature	< 60 K	< 37 K
50 K shroud operating temperature	< 45 K	< 25 K
100 K plate operating temperature	< 120 K	< 90 K
LN2 tank holding time	> 72 hrs	177 hrs

Comparison of Experimental Data with Test Objectives

Experimental data collected through the cryogenic test serve as references for future chamber operation. As shown in Table 4, they compare favorably against the test objective.

DISCUSSIONS AND CONCLUSIONS

The 50 K shroud had the longest cool-down time compared to the rest of the system mainly due to the absence of an LN2 pre-cooling circuit. Other factors include that fact that low heat leak into the shroud led to low operating temperature at the GM cold head where cooling capacity is low and the thin wall of the shroud as a compromise between less thermal mass and higher conductance. Nevertheless, the cool-down speed of the 50 K shroud can be considered acceptable and no improvement measures seem to be necessary.

In conclusion, the cryogenic test of the Planck test facility was carried out successfully. Experimental data compare favorably against those from previous testing of the sorption cooler prototype. With all test objectives achieved or succeeded, this experiment demonstrated that the test facility has adequate cryogenic cooling power and proper delivery means to create and maintain required testing environment for future testing of flight units of the Planck sorption coolers.

ACKNOWLEDGMENT

The research described in this paper was carried out by the Jet Propulsion Laboratory, California Institute of Technology, under a contract with the National Aeronautics and Space Administration.

REFERENCES

1. Collaudin, B. and Passvogel, T., "The FIRST and PLANCK 'Carrier' Missions. Description of the Cryogenic Systems", *Cryogenics,* Vol. 39 (1999) pp. 157-165
2. Prina, M., et al., "Initial Test Performance of a Closed-Cycle Continuous Hydrogen Sorption Cooler, the Planck Sorption Breadboard Cooler", *Cryocoolers 12*, Kluwer Academic/Plenum Press, New York (2003).
3. Bowman, Jr., R.C., et al., "Evaluation of Hydride Compressor Elements for the Planck Sorption Cooler", *Cryocoolers 12*, Kluwer Academic/Plenum Publishers, New York (2003).
4. Zhang, B. "Structural Analysis of Test Chamber for Planck Sorption Cooler Non-flight Configuration Testing", *Design Monograph*, JPL (2003).
5. Zhang, B. "Facility Thermal Analysis for Planck Sorption Cooler Non-flight Configuration System Testing", *Design Monograph*, JPL (2003).
6. Cryodata, "User's Guide to CRYOCOMP", version 3.0, Colorado, (1997).