One-Liter Hg Ion Clock for Space and Ground Applications

John D. Prestage, Sang Chung, Thanh Le,
Maggie Beach, Lute Maleki, Robert L. Tjoelker

Jet Propulsion Lab
4800 Oak Grove Drive
Pasadena, CA 91109 USA

Abstract- We describe the development of a small Hg^+ ion clock suitable for space use. A small clock occupying 1-2 liters volume and producing stability of $10^{-12}/\sqrt{\tau}$ would significantly advance the state of space-qualified atomic clocks. Based on recent measurements, this technology should produce long-term stability as good as 10^{-15}.

I. INTRODUCTION

A space-based clock with frequency stability better than 10^{-13} over a several day period would enable one-way deep space navigations, where Doppler data would be accumulated in a down-link only fashion. Currently, deep space navigation is implemented by measuring the Doppler frequency shift of a 2-way link from a ground station to a spacecraft (s/c) and the coherent return link. Typically, these links are maintained for 7-8 hours per s/c track, requiring full use of a 34-meter antenna in the Deep Space Network for the time the s/c is sufficiently above the horizon.

A clock on board the s/c with 10^{-13} or better frequency stability could be used to navigate to the same precision as can be done with the two-way method [1]. Additionally, when more than one s/c orbit the same planet and can be seen by a single antenna, the s/c can be tracked simultaneously with one antenna. This multiple s/c tracking by a single antenna can thus reduce antenna usage and DSN costs.

The performance goal in the small atomic clock described here, $10^{-12}/\sqrt{\tau}$, will exceed the typical performance of a s/c USO beyond 100 seconds averaging and will deliver 10 to 100 times improved frequency stability over that of a USO at 1-hour averaging. This is because USO quartz oscillators typically show flicker frequency noise of ~ 10^{-13} from 1 second to longer times and show a linear frequency drift ~1-5 x 10^{-10} per day [2].

Ion clock technology has shown great inherent stability, reaching ~2×10^{-16} frequency stability in a free running mode where no periodic calibrations (of, for example, Zeeman transitions to determine internal magnetic fields and their changes over time) were made to disrupt continuous clock operation [3]. The design for the small clock discussed here will be based on the same architecture as used in the ion clock described previously [3,4] though in a much smaller package.

Additionally, this technology has shown very small temperature coefficients, a few times 10^{-15} per degree C change. These numbers are measured without any thermal shielding of the clock physics and electronic packages. Only modest thermal shielding would be required to reach 10^{-15} clock stability.

II. CHALLENGES TO MINITURIZATION

There are many applications for ultra-stable clocks both in space and on the ground where a small package size is required. For example, there are severe restrictions on physical size for on-board instrumentation for deep space vehicles; total s/c mass (un-fueled) is often less than 400 kg with future trends toward even less mass. The components in a s/c radio system are 1-3 kg or less for each module. A USO is 3-4 kg, though most missions do not require one, and similarly, a TWTA is about 2-3 kg.

We have developed a laboratory $^{199}Hg^+$ trapped ion clock of exceptional performance, reaching frequency stability close to 2×10^{-16} at a few days averaging time. The ion trapping methods developed for this clock are an essential element in reaching this stability. The liter clock ion trap architecture will be based on ion shuttling between a linear-quadrupole and a linear-multipole as used in the ground clocks [3-5]. However, to meet the 1-2 liter size requirement, there will be changes and re-designs in the vacuum and optical systems.

The ground clock uses a turbo-molecular pump to maintain base pressures near 10^{-9} Torr and to pump the helium buffer gas, maintained at the ~10^{-5} Torr level. The helium buffer gas pressure is carefully regulated by a flow-thru temperature controlled quartz leak, with an ionization gauge to measure system pressure and servo the temperature of the quartz leak to maintain a given helium level.

The liter clock will rely on getter pumping to maintain low vacuum base pressure. These getters will not pump noble buffer gases so that no flow thru gas system will be required. This procedure will rely on very good cleaning and baking of the vacuum system before pinching the vacuum off from the pump stand.

III. MONOLITHIC ION TRAP

The ion trap is shown below in Figure 1. The trap rods are brazed into the 3 Alumina rings on each end and at the junction between the quadrupole and 16 pole regions. The overall length is ~ 17 cm and the outside diameter ~ 1.5 cm.

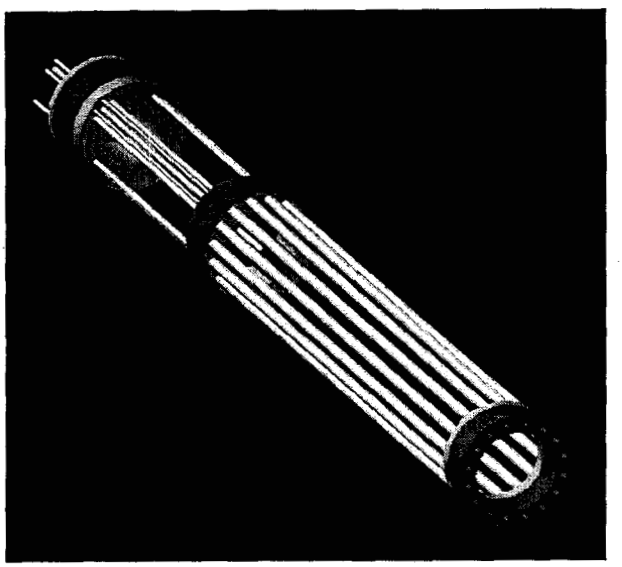

Fig. 1. The monolithic shuttle ion trap for the liter clock. Ions are optically state-selected in the quadrupole, electrically shuttled to the 16-pole where microwaves are applied to drive the clock transition, and then moved back into the quadrupole for state monitoring.

The inside diameter of the electrode circle is the same as used in the trap for the ground multipole clocks recently developed [3-5]. The two trap regions will be operated at different frequencies since that will eliminate holes in the rf pseudo-potential near the junction [4,5]. The electrical inter-connections of the rf trapping rods operated at the same rf phase will be accomplished by metallic plating on the ceramics where the rods are seated.

The rods are made from molybdenum (non-magnetic) so that a narrow linewidth on the 40 GHz clock transition can be achieved. The stability goal requires $Q \sim 10^{11}$ on this transition.

IV. INTEGRATED OPTICAL SYSTEM

The optical system for collecting good UV fluorescence from the trapped Hg ions is a critical element in reaching the short-term stability goal. We have designed and fabricated the system shown in Figure 2, used both for focusing the source light from a ^{202}Hg lamp onto the trapped ions and for collection of fluorescence from the ions. The dielectric coated folding mirror serves as a dichroic reflector with >95% reflectance for 194 nm ion fluorescence light and <10% reflectance for the parasitic 254 nm light from a neutral Hg transition. Since we are limited in stability by stray light, it is important to eliminate the ~ 10x brighter 254 nm light from the beam since it is within the detection band of the UV sensitive PMT light sensor.

The integration of this system with the ion trap assembly is shown in Figures 3a and 3b. The housing that holds the lens, mirrors, and detectors/source also holds the electronics modules that operate the PMTs, pulse amplifier-discriminator, and discharge lamp. This is shown in the figure. This single-module approach to the optical package is different from the

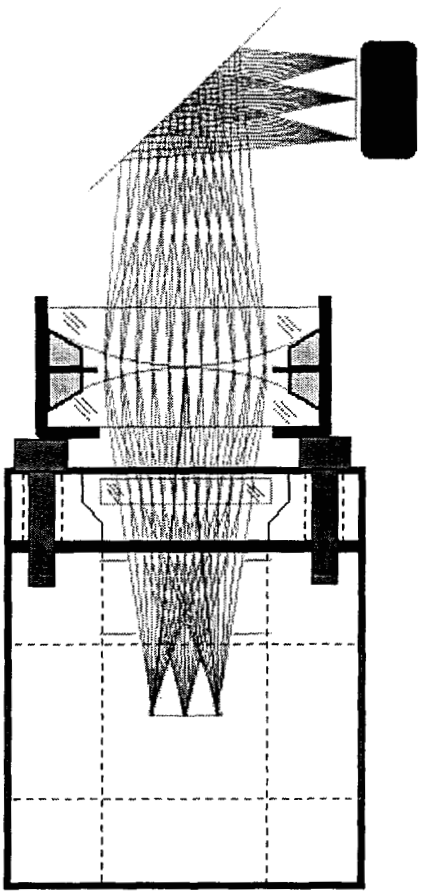

Fig. 2. UV optical system for state selection of the trapped ions. A dichroic folding mirror filters away the parasitic 254 nm light leaving 194 nm Hg ion state selecting light. The 1.33" vacuum cube and window flange are also shown.

ground clock of ref [3,4] where three independently moveable optics modules were adjusted to maximize ion fluorescence. The integrated optical system developed here can be aligned on the bench so that the foci of the 3 identical optical arms fall at the same position. The process of optical alignment is just now underway, since we have recently completed the fabrication and assembly of the optical package.

V. CONTINUED WORK

There are several electronic modules that remain to be built, including the trap rf drivers, a field emitter electron voltage source, dc magnetic field supply, magnetic shields, multiplier chain from the LO to 40 Ghz, et al. The microwave window is a ceramic vacuum break in the 16-pole trap region vacuum jacket so that conventional waveguide components will be used, all outside the vacuum.

The package size is largely determined by the trap, vacuum enclosure and the 'perpendicularly' directed optical system. Even though several electronics modules remain to be

fabricated, the 1-2 liter package seems very realistic in this first engineering model.

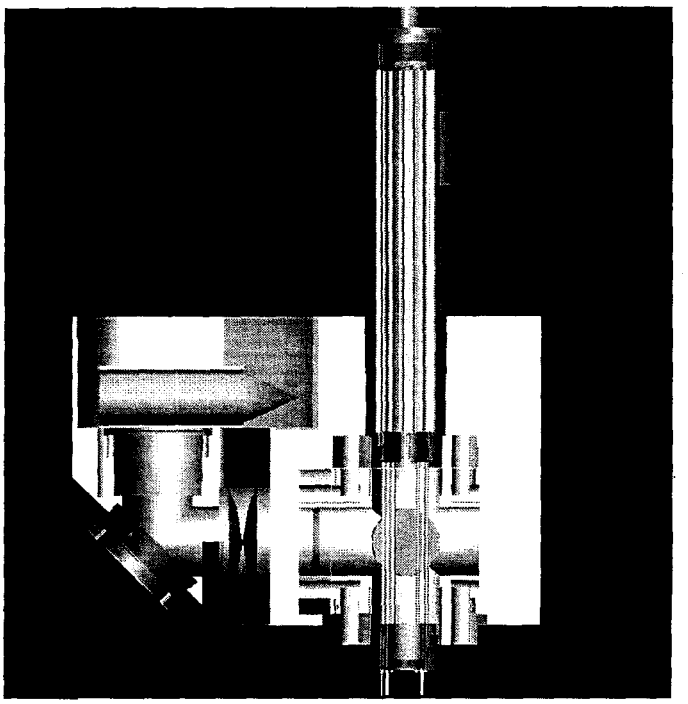

Fig. 3a. Cross-section view of optical package showing the source optical arm together with the discharge lamp at the focal plane. The overall vertical length is ~ 8".

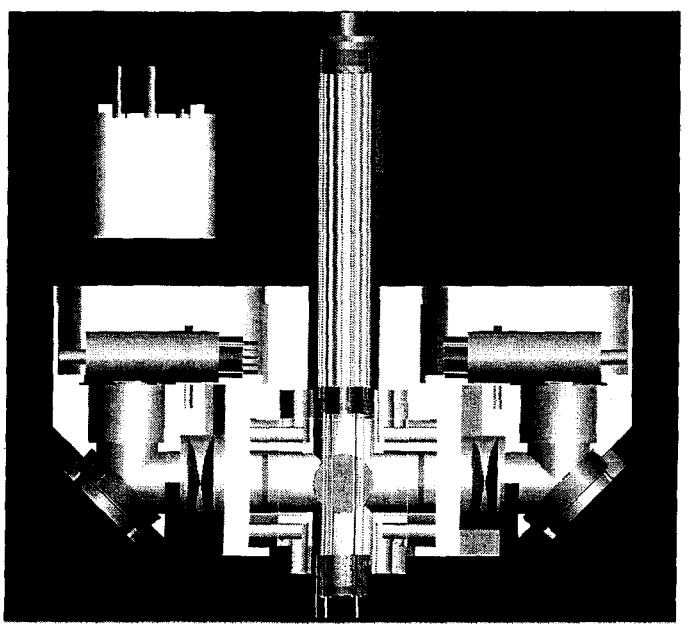

Fig. 3b. Cross-section view of optical package showing the detection optical arms with a photomultiplier tube at each focal plane. An ovenized quartz VCXO of adequate performance to meet the stability goal is shown in the upper left. The overall length is under 8"

VI. AKNOWLEDGMENTS

This work was carried out by the Jet Propulsion Laboratory, California Institute of Technology, under contracts with the National Aeronautics and Space Administration.

REFERENCES

[1] S. Bhaskaran, "The Application of Noncoherent Doppler Data Types for Deep Space Navigation" in *TDA Progress Report 42-121, May 1995, p 54.*

[2] Private communication, Albert Kirk from GRACE flight oscillator pre-flight test data.

[3] R. L. Tjoelker, J. D. Prestage, P. Koppang, and T. Swanson, "Stability Measurements of a JPL Multi-pole Mercury Trapped Ion Frequency Standard at the USNO," *2003 Joint Meeting EFTF and IEEE IFCS*, Tampa, FL May 2003.

[4] J. D. Prestage, S. Chung, E. Burt, L. Maleki, and R. L. Tjoelker, "Stability Measurements between Hg^+ LITE 12-Pole Clocks," *2002 IEEE IFCS*, New Orleans, LA, May 2002, p. 459

[5] J. D. Prestage, R. L. Tjoelker, and L. Maleki, "Mercury Ion Clock based on Linear Multipole Ion Trap," *2000 IEEE IFCS*, Kansas City, MO June 2000, p. 706.