TPF Science, Technology, and Design Expo '03

Structurally Connected Interferometer Optical Schematic & Block Diagram

Optical Schematic of SCI Beam Train (1 of 2)

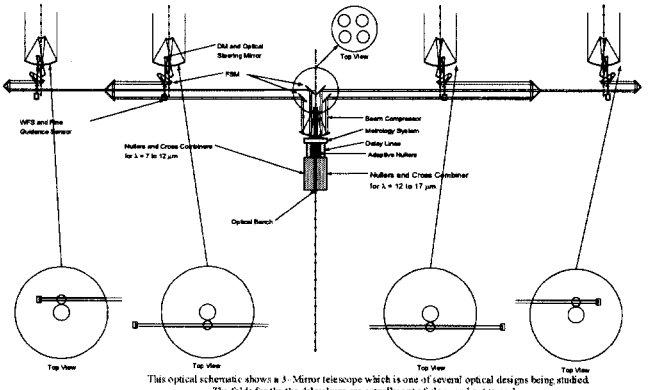

This optical schematic shows a 3 - Mirror telescope which is one of several optical designs being studied. The folds for the the delay lines are actually out of plane and not to scale.

Optical Schematic of SCI Beam Train

(2 of 2)

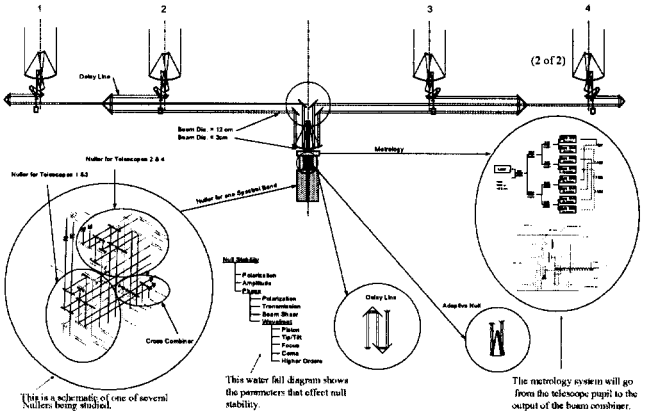

This is a schematic of one of several Nullers being studied.

This waterfall diagram shows the parameters that effect null stability.

The metrology system will go from the telescope pupil to the output of the beam combiner.

Optical Schematic for Both Spectral Bands

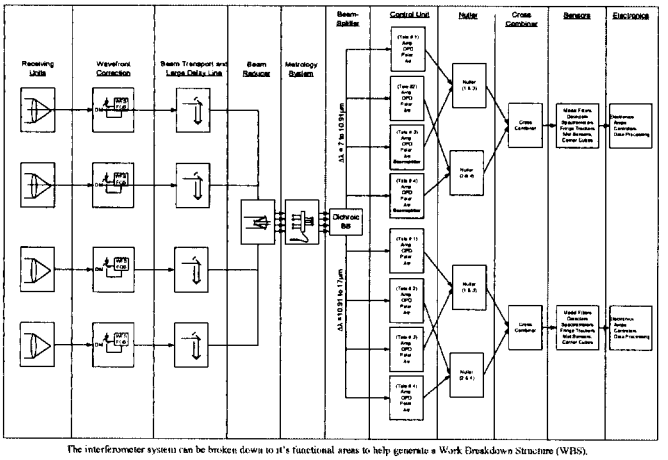

The interferometer system can be broken down to it's functional areas to help generate a Work Breakdown Structure (WBS).

Optical Schematic for Both Spectral Bands

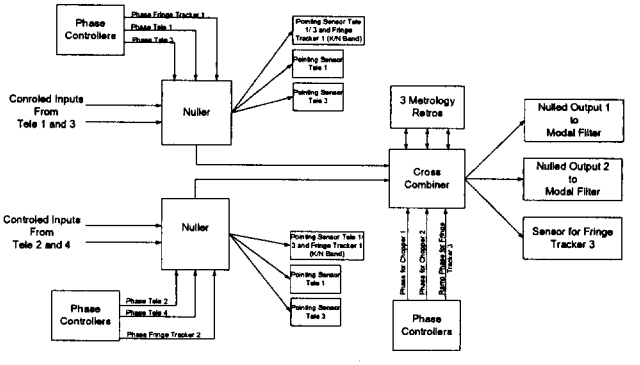

The interferometer system can be broken down to it's functional areas to help generate a Work Breakdown Structure (WBS).

Optical Schematic of SCI Beam Train (1 of 2)

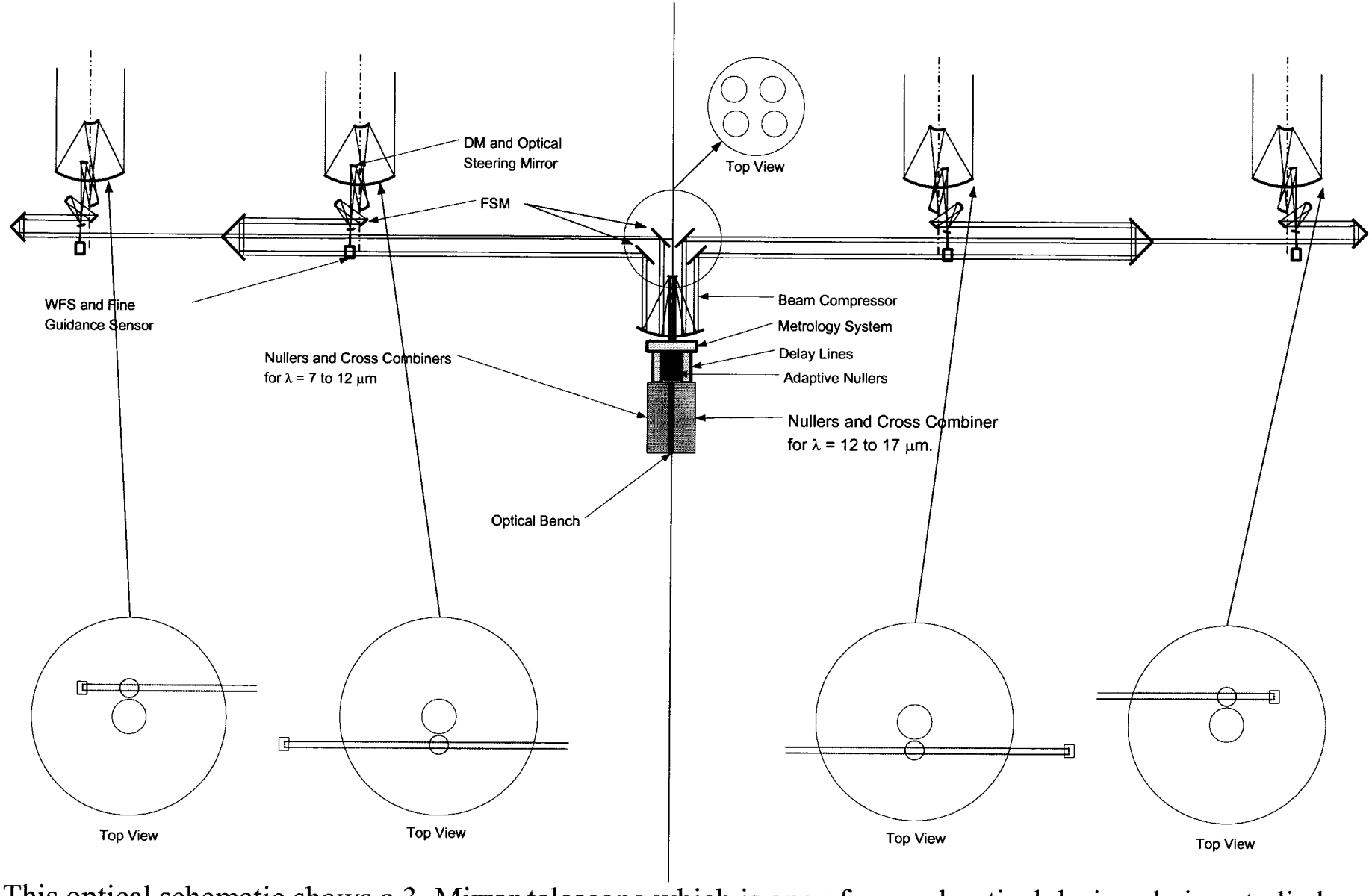

This optical schematic shows a 3–Mirror telescope which is one of several optical designs being studied. The folds for the the delay lines are actually out of plane and not to scale.

Optical Schematic of SCI Beam Train (2 of 2)

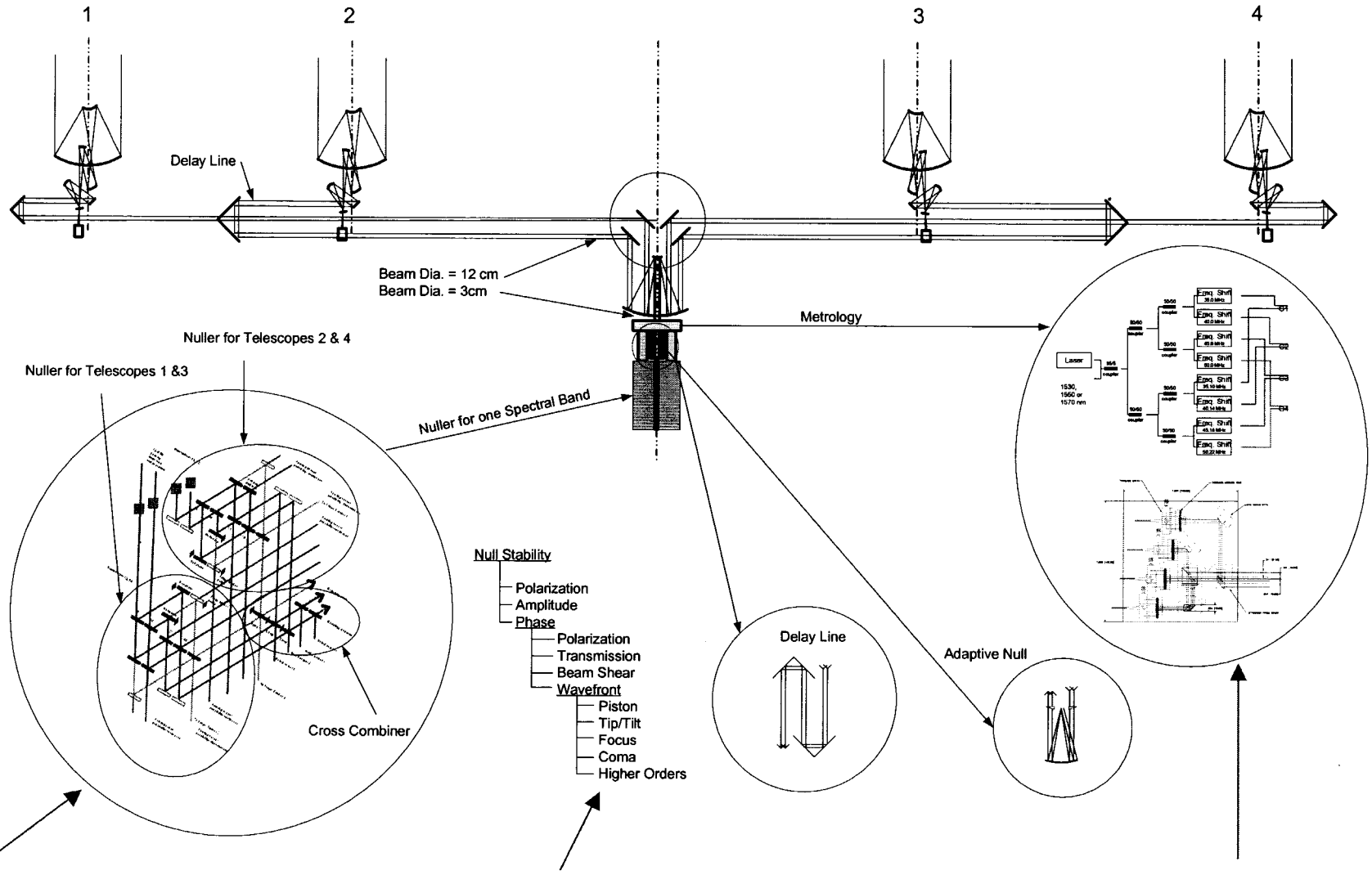

This is a schematic of one of several Nullers being studied.

This water fall diagram shows the parameters that effect null stability.

The metrology system will go from the telescope pupil to the output of the beam combiner.

Optical Schematic for Both Spectral Bands

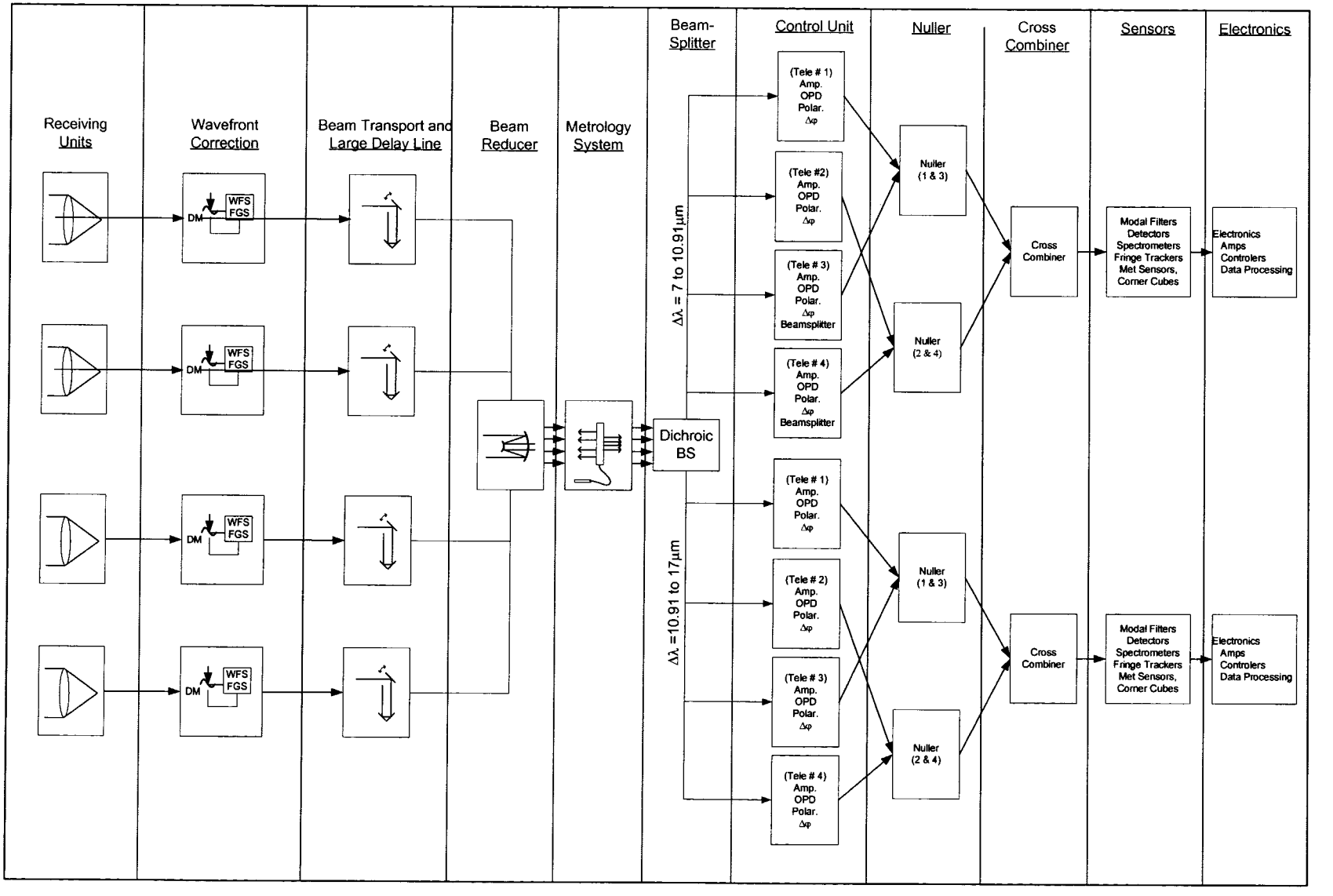

The interferometer system can be broken down to it's functional areas to help generate a Work Breakdown Structure (WBS).

Sensors and Mechanisms for One Spectral Band

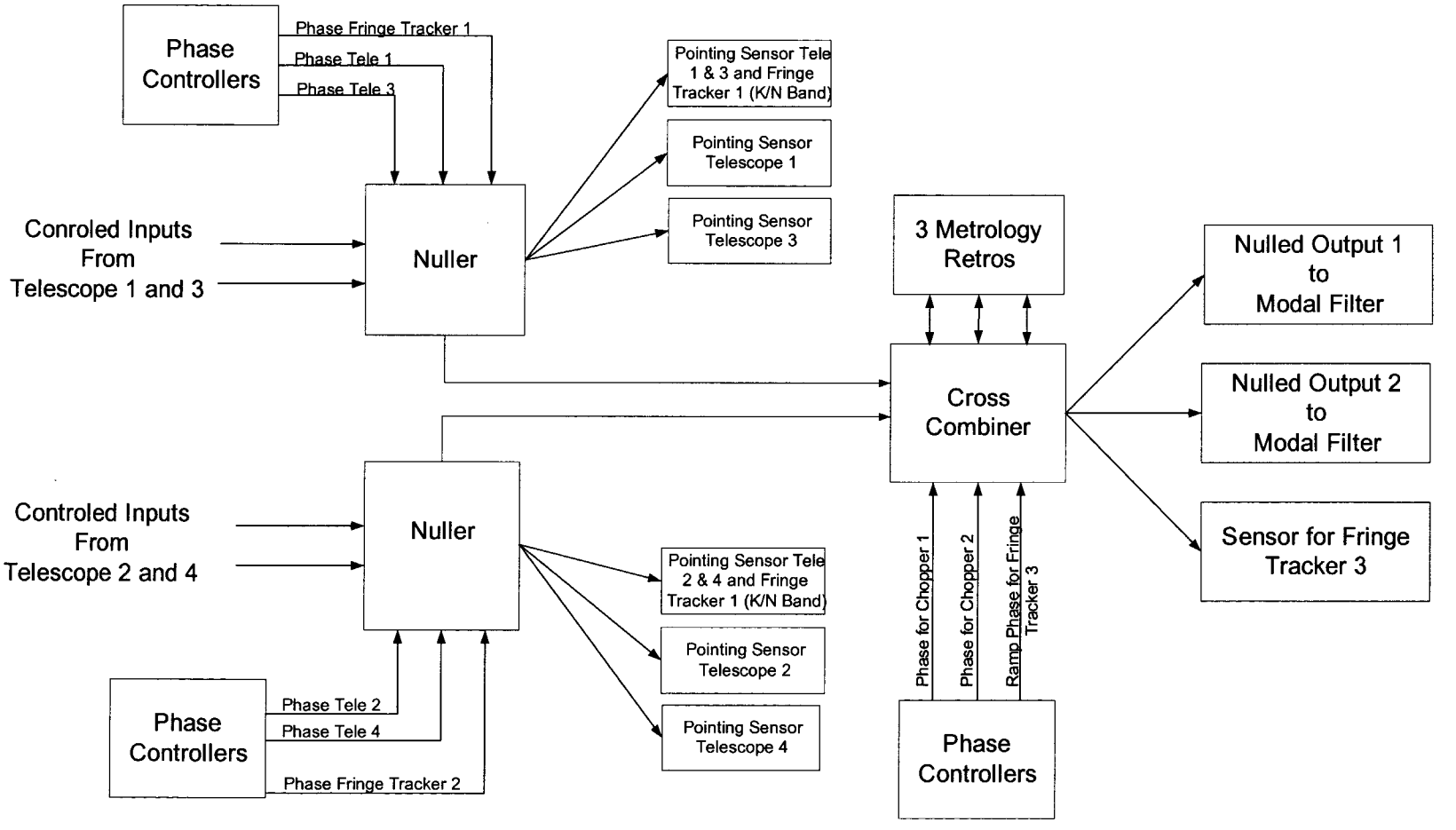

This is a simplified view of the sensors and controllers that will be required on the beam combiner. An identical system will be required of the second spectral band.