MARS TELECOMMUNICATIONS ORBITER K_a-BAND SYSTEM DESIGN AND OPERATIONS

Gary Noreen, Tomas Komarek, Roger Diehl, Shervin Shambayati, Julian Breidenthal, Saturnino Lopez and Frank Jordan
Jet Propulsion Laboratory, California Institute of Technology
4800 Oak Grove Drive, Pasadena, CA 91109-8099, USA
Phone: +1-818-354-6048
Facsimile: +1-818-393-9815
Email: gary.k.noreen@jpl.nasa.gov

Ramon De Paula
NASA Headquarters, Washington, DC 20546, USA

ABSTRACT

NASA's Mars Telecommunications Orbiter (MTO) will relay broadband communications from landers, rovers and spacecraft in the vicinity of Mars to Earth. MTO features the most advanced communications system ever launched on an interplanetary mission. It will have high performance UHF and X-band relays and X-band and K_a-band Direct-To-Earth (DTE) links, as well as a DTE laser communications demonstration. MTO's K_a-band DTE link will be the first operational K_a-band system at Mars. This paper describes the MTO communications system and how the MTO K_a-band system will be operated.

INTRODUCTION

NASA has been developing a K_a-band deep space communications infrastructure that will soon include 34-m ground stations capable of receiving K_a-band communications at all three Deep Space Network (DSN) complexes.* NASA has tested deep space K_a-band links to Earth on DS-1, Mars Observer[1], and Mars Global Surveyor.[2] NASA's Mars Reconnaissance Orbiter (MRO), to be launched in 2005, will do an extensive K_a-band operational demonstration.[3]

NASA's Mars Telecommunications Orbiter (MTO),[4] to be launched in 2009, will bring several firsts to interplanetary communications:

- Interplanetary communications satellite – the first spacecraft whose primary mission is to provide relay communications services to other missions in the vicinity of another planet.
- Interplanetary laser communications – the first demonstration of laser communications from another planet.
- The first Mars mission to rely on K_a-band communications for its primary link to Earth.

The severe effects of adverse weather on K_a-band links raise unique link management issues for deep space communications. The long two-way light time to Mars (6 to 40 minutes) precludes feedback control of the K_a-band link, necessitating the use of predictive weather models to estimate link performance and adjust link parameters in advance. Given our limited ability to predict weather outages, and the severity of such outages at K_a-band, there will be gaps in the returned data. It will

* The DSN's three antenna complexes are located near Madrid, Spain and Canberra, Australia and in Southern California.

thus be necessary to use an automatic repeat request system with long latency capability to ensure reliability. This drives memory requirements on the spacecraft.

This paper reviews the motivation and challenges behind using K_a-band for planetary communications and the K_a-band demonstration on MRO. It then describes the MTO radio frequency communications subsystem and MTO's reference K_a-band operating strategy, which combines weather forecasting and automatic selective retransmission to maximimize data volume while ensuring reliable communications.

K_a-BAND FOR PLANETARY EXPLORATION

K_a-band offers a large improvement in deep space communications performance and operates in a less congested frequency band than the S-band and X-band frequencies currently used by deep space missions.

Assuming perfectly steered antennas on both ends of a communication link and fixed aperture size, the link equation[5] predicts that performance improves with the square of frequency. Thus moving from S-band at 2295 MHz to X-band at 8425 MHz theoretically improves deep space communication performance by a factor of 13.5. The actual performance improvement seen by real missions tracked by the DSN has been close to this, with additional advantages accruing from the smaller size of X-band equipment.

The link equation predicts that moving from X-band to K_a-band at 32 GHz would lead to another factor of 14 times performance improvement for links between fixed-aperture antennas. However, due to a number of relative inefficiencies, deep space K_a-band links show an improvement of just 3 to 5 times relative to X-band. These inefficiencies arise from greater sensitivity to antenna surface variations and imperfect antenna pointing, less efficient power amplifiers, higher receiver noise temperature, and increased susceptibility to atmospheric disruptions (adverse weather) at K_a-band.

For communications between a fixed aperture antenna (i.e. a DSN antenna) and a fixed-gain antenna (i.e. a spacecraft omnidirectional antenna), performance is roughly invariant between S-band and X-band. However, K_a-band suffers major degradations due to many factors, including increased sensitivity to carrier frequency variations, which make K_a-band communications through deep space omnidirectional antennas impractical at present. As a result, X-band communications will be retained for the foreseeable future for communications with spacecraft in deep space for both commanding and telemetry when the spacecraft is unable to point a K_a-band High Gain Antenna (HGA) towards Earth. Furthermore, command data rates for deep space missions are low enough that X-band continues to be sufficient for deep space uplink (Earth-to-spacecraft) communications. Our discussion about K_a-band in the rest of this paper will thus be limited to spacecraft-to-Earth K_a-band links (telemetry) through an HGA.

Though K_a-band links are challenging, there are two major benefits: the aforementioned 3 to 5 times performance improvement and greater spectrum availability. The deep space allocation for K_a-band is 500 MHz, while just 50.5 MHz is allocated at X-band.

The limited X-band allocation is especially problematic at Mars. By the end of January, 4 orbiters, a lander and two rovers will all be operating at Mars. In 2006, MRO will send vast quantities of data to Earth at data rates as high as 5.3 Mbps; it could

send much more when close to Earth† were it not for hardware limitations. There is little X-band spectrum left at Mars for other users.

The sensitivity of K_a-band links to weather degradation has major operational implications. Previous deep space missions have rarely needed to arrange special procedures to work around bad weather because S-band links are impervious to weather effects and X-band links are nearly so. However, K_a-band links can be completely wiped out by adverse weather – noise temperature can increase by 100 K or more. Missions relying on K_a-band for sending telemetry to Earth must be operated in ways that accommodate this increased weather susceptibility.

MRO OPERATIONAL DEMONSTRATION

MRO will demonstrate K_a-band operations with a 35 W K_a-band transmitter provided by JPL's Interplanetary Network Directorate (IND). The intent of the MRO demonstration is to verify that the anticipated K_a-band benefits can be realized under real operating conditions and, if possible, to enhance MRO data return. In preparation for this demonstration, MRO is studying several possible K_a-band telemetry operating scenarios,[3] including:

- Just send the data and collect what comes through successfully.
- Site and time diversity – receive the data at more than one site or more than one time.
- Selective retransmission.
- Adapt the data rate transmitted to forecasted weather.
- Error-control coded operations.

The MTO Project is working with the MRO Project to ensure that everything learned about K_a-band operations on MRO is carried over to MTO.

MTO SPACECRAFT

The MTO spacecraft will be built by an industry contractor. This section describes JPL's reference spacecraft design.

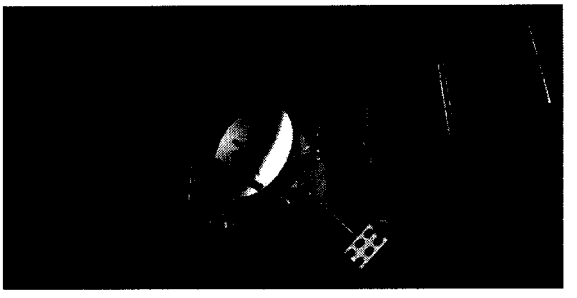

Figure 1. MTO Spacecraft Artist Concept

The MTO spacecraft (Figure 1) is scheduled to be launched in 2009 and will be inserted into a highly elliptical orbit around Mars in 2010. At least two propulsive delta-V maneuvers, a periapse raise followed by an apoapse lower, will place the MTO spacecraft into its final orbit. The MTO spacecraft will have a design life of 6 years in Mars orbit, and will carry enough consumables for 10 years in Mars orbit.

MTO carries two principal payloads:

1. An Electra transceiver which, together with steerable UHF and X-band proximity antennas, provide data relay services and navigation support to other Marscraft (landers, rovers, aerobots and other orbiters in the vicinity of Mars).

2. A 30 cm aperture telescope and associated laser and electronics that will be used to demonstrate high data rate communications with Earth at optical wavelengths.

† Path loss to Mars can vary by a factor of nearly 50 between inferior and superior conjunction.

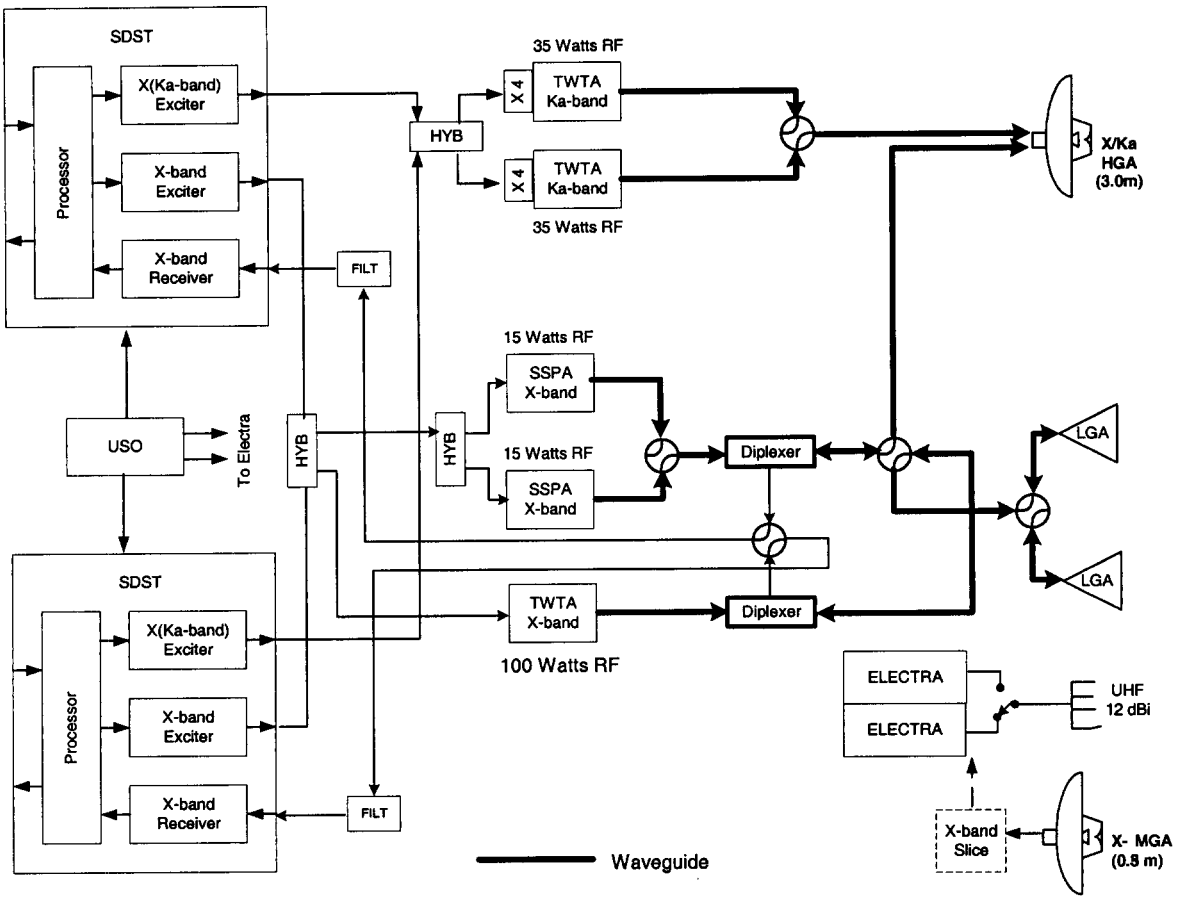

Figure 2. MTO RFS Block Diagram

The reference MTO Radio Frequency Subsystem (RFS), illustrated in Figure 2, is very similar to that of MRO. To provide high data rate Direct-To-Earth (DTE) capability, MTO will utilize a combined K_a- and X-band HGA. Redundant 35-watt K_a-Traveling Wave Tubes (TWTAs) support a data rate in excess of 400 Mbps at maximum Earth-Mars range. The MTO telecommunications system also incorporates redundant 30-watt X-band TWTAs and a single 100-watt X-band TWTA.

MTO K_a-BAND OPERATIONS

The MTO RFS receives commands for itself and other Marscraft from Earth over its X-band Direct-From Earth (DFE) link and forwards commands to other Marscraft over a UHF relay link. It receives data from other Marscraft at UHF and/or X-band and forwards this data to Earth, along with its own data, over X-band and K_a-band Direct-To-Earth (DTE) links. The RFS also makes radiometric measurements on relay links that can be used for Marscraft navigation.

Figure 3 (next page) shows average data return for similarly powered X- and K_a-band transmitters as a function of cumulative weather distribution for a single pass at a Madrid 34-m DSN ground station. The data rate was optimized at each assumed weather distribution to ensure maximum data return. For example, if the data rate is optimized for 80% availability – in other words, so that the threshold E_b/N_0 is exceeded 80% of the time and thus data can be received 80% of the time – the average data return is 57.38 dB. Similarly, if the link is optimized for 90% weather at X-

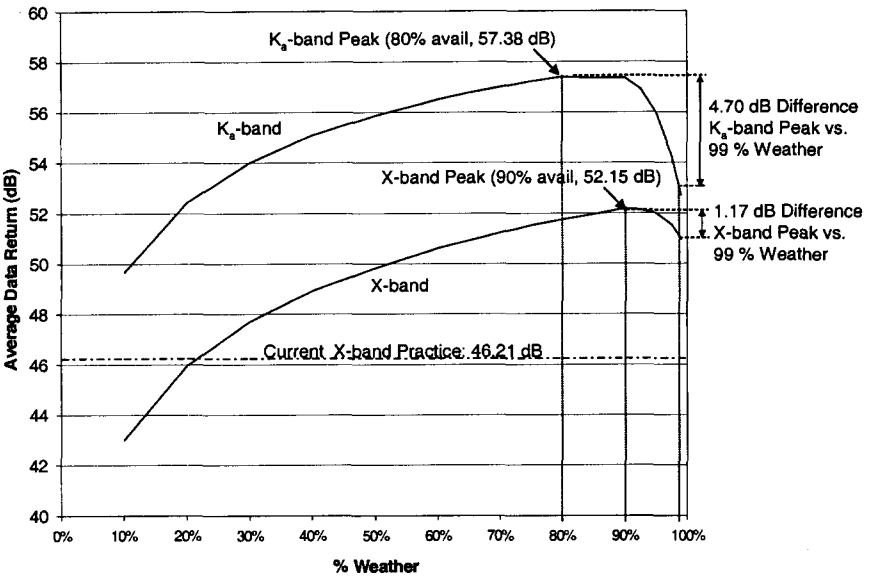

Figure 3. Average Data Return vs. Percent Weather, Madrid Pass

lead to accounting problems and manual-intensive efforts at retransmission in the past.

Getting back data 80% of the time is not acceptable for many mission functions, both for MTO and for its relay users. Even 90% weather can leave significant gaps.

band, the average data return is 52.15 dB. These estimates of average data return are relative.

Note that there is a 4.7 dB difference between 99% weather and 80% weather at K_a-band, but only a 1.17 dB difference between 90% weather and 99% weather at X-band. This means that in order to ensure that the data will get through with high reliability (i.e. with 99% weather), there is a 4.7 dB penalty at K_a-band and only a 1.17 dB penalty at X-band.

Current practice is to design X-band links for 3 dB margin at the lowest elevation angle. As illustrated in Figure 3, in this case the average data return with current practice is nearly 6 dB lower than the peak data rate possible at X-band.

K_a-band exhibits much greater variation with elevation angle than does X-band, as illustrated in Figure 4, which shows the receive G/T of a 34-m ground station in the Madrid DSN tracking complex at X- and K_a-band for 95% weather.

One of the reasons that X-band links have been operated with such large margins is that lowering the margin can cause interruptions and incomplete datasets. This has

MTO will use the CCSDS File Delivery Protocol (CFDP)[6] on both relay and Earth links to ensure reliable end-to-end data delivery. This protocol supports selective retransmission of frames at the application layer. With this protocol, lost data will be automatically resent, enabling efficient use of link capabilities by operating close to the optimal design point. This capability is particularly important for K_a-band operations due to the inherently greater sensitivity of K_a-band to adverse weather.

MTO evaluated the alternative K_a-band operating strategies which will be demonstrated by MRO in a decision tree and selected selective retransmission with CFDP as its reference K_a-band operations strat-

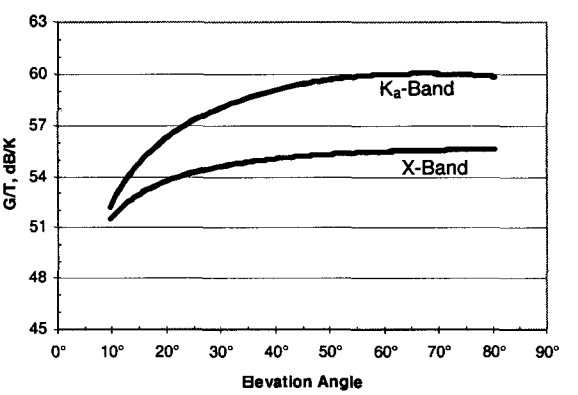

Figure 4. G/T vs. Elevation Angle

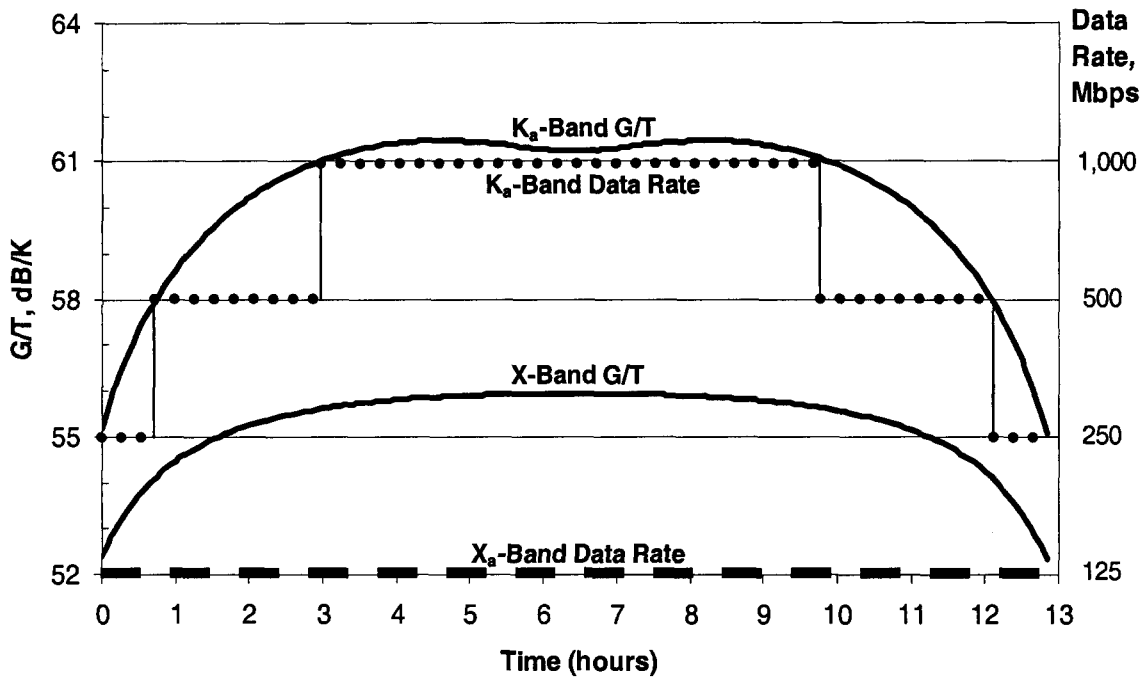

Figure 5. Initial G/T Prediction and Data Rate Profile

egy.

MTO's relay customers, like the 2009 Mars Science Laboratory, typically send telemetry for two reasons: as needed to operate their Marscraft, and to return science data to Earth. Operational data are generally needed quickly and with high reliability so that they can be acted upon. Science data, on the other hand, can normally be delayed for days, if necessary. Science data exceeds the data needed for operations by one to two orders of magnitude.

MTO's reference downlink operating strategy is to send operational relay data and its own engineering data to Earth at X-band with the link designed to tolerate very adverse weather (99%). Bulk science data will be sent to Earth at K_a-band using a link design optimized to send back the largest total data volume possible. The K_a-band link will be designed to tolerate a cumulative weather distribution of 80% to 90%, depending on the local weather forecast and automated analyses which will find the optimal operating point. The K_a-band link design will be changed automatically over a short period of time to reflect changes in forecasted weather.

The following steps are taken for K_a-band operations:

Before the end of the previous pass, the MTO Mission Operation System (MOS)[7] sends a K_a-band link parameter command file to the spacecraft setting the initial K_a-band link parameters (data rate, coding, etc.) for the pass (Figure 5). These initial K_a-band link parameters are derived using DSN G/T predictions based on the most recent weather forecast.

The spacecraft begins transmitting with the initial K_a-band link parameters so that its transmission begins to be received by the DSN at the beginning of the appointed pass. Just before the beginning of the pass, the MTO MOS again derives optimal link parameters based on the most recent weather forecast. If these parameters are significantly different than the previously sent initial link parameter file, the MOS formulates and then sends a new K_a-band

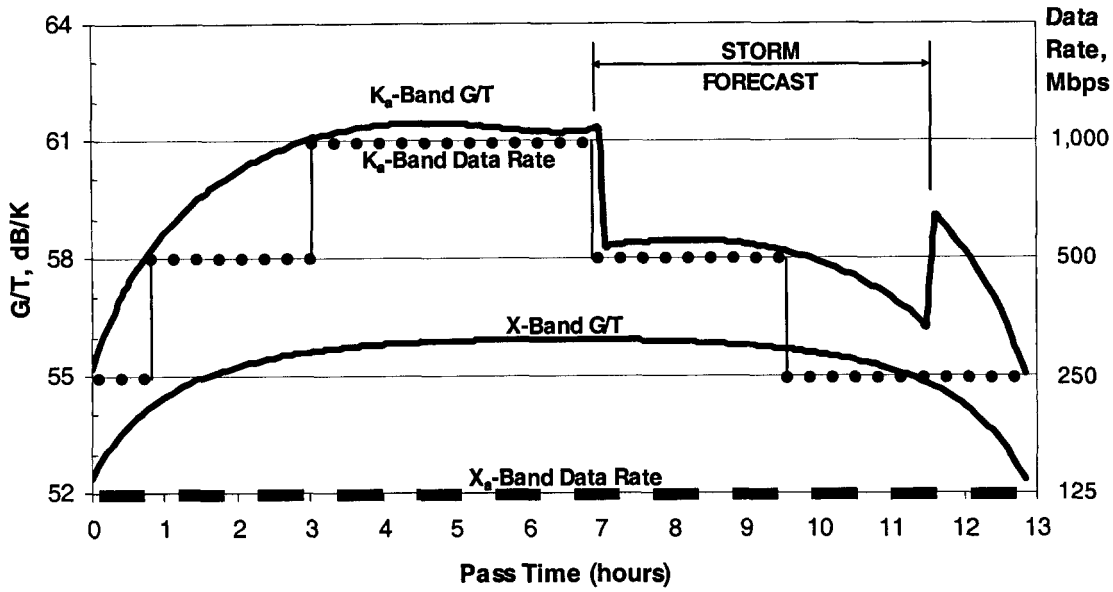

Figure 6. Revised G/T Prediction and Data Rate Profile Based on Changed Weather Prediction

link parameter command file to the spacecraft as soon as an uplink is available (Figure 6).

Telemetry received from MTO is sent by the DSN to the MTO MOS, where it is checked for completeness using CFDP. Incomplete frames are identified and the MTO MOS automatically formulates and sends command files requesting retransmission to the DSN for transmission to MTO.

The MTO MOS automatically monitors weather forecasts during the pass and formulates and sends a new K_a-band link parameter file to MTO whenever necessary.

This operating strategy assumes that an uplink will be readily available for retransmission requests and for sending new data rate profiles. However, the uplink will often need to be shared with other missions. The DSN has implemented a Multiple Spacecraft Per Aperture (MSPA) capability that enables several spacecraft to use the same ground station. The current MSPA implementation can support up to two downlinks simultaneously; this is to be upgraded to four simultaneous downlinks in 2007. At present, there are no plans for simultaneously sharing an uplink between multiple spacecraft, though the uplink can be switched between spacecraft.

MTO's reference K_a-band operating strategy requires short-term weather forecasts.[8] New weather forecast services are being developed which promise to make reliable, inexpensive short-term forecasts of local areas.[9] In the case of K_a-band tracking of Mars missions, and MTO in particular, we are principally interested in the columnar weather on Earth between Mars and the ground antenna receiving the signal from Mars – i.e. the weather above the ground station in the direction of Mars. MTO will normally be tracked by only one antenna at a time, a 34-m Beam Wave Guide station at one of the three DSN complexes.

MTO is initiating a study of its reference K_a-band operating procedure in conjunction with JPL's Interplanetary Network Directorate. The study will address the following issues:

- How quickly can data rate changes be made during a pass?

- To what degree can data rate changes be automated?
- How many data rate levels should be used?
- Would it be possible to continuously change data rate?
- How can predictions of K_a-band performance incorporating weather forecasts be automated?
- Will improved weather forecasts significantly improve K_a-band performance?
- Would the ability to change the data rate profile after a pass begins significantly increase K_a-band performance?
- How much spacecraft memory will be necessary to retain data which may need to be retransmitted?
- What algorithm should be used to determine K_a-band operating points?

CONCLUSION

K_a-band telemetry offers a large increase in data return from Mars and will mitigate frequency congestion at this intensively explored planet. MTO will rely on K_a-band telemetry as its principal means of returning science data from several other Mars missions. To mitigate the effects of adverse weather on Ka-band operations, MTO plans to develop operating procedures not heretofore used on deep space missions, such as changing data rates in response to weather predictions and using automatic selective retransmission to recover lost data.

ACKNOWLEDGEMENTS

The work described in this paper was carried out at the Jet Propulsion Laboratory, California Institute of Technology, under contract with NASA.

---

[1] Rebold, T.A., et. al., The Mars Observer K_a-Band Link Experiment, TDA Progress Report, 42-117, May 15, 1994, Jet Propulsion Laboratory, Pasadena, CA, USA.

[2] Butman, S., et. al., "The Mars Global Surveyor K_a-band Link Experiment (MGS/KABLE-II)," 3rd K_a-band Utilization Conference, Italy, September 1997.

[3] Townes, S., et. al., Operational Demonstration of K_a-Band Telecommunications for the Mars Reconnaissance Orbiter, IEEE Aerospace Conference, Paper 12.0307, Big Sky, Montana, March 2003.

[4] De Paula, Ramon, et. al., Telecommunications System Evolution for Mars Exploration, 54th International Astronautical Congress, IAF-03-4.04, Bremen, Germany, October 2003.

[5] Yuen, Joseph H., Deep Space Telecommunications Systems Engineering, Plenum Press, 1983.

[6] CCSDS File Delivery Protocol, current version CCSDS 727.0-B-2, http://ccsds.org/.

[7] Deutsch, Marie-Jose, et. al., Mars Telecommunication Orbiter Mission Operations Concepts, 54th International Astronautical Congress, IAF-03-Q.3.a.02, Bremen, Germany, October 2003.

[8] Slobin, Stephen D. and Shervin Shambayati, Short-Term Weather-Effects Predictions for Use in K_a-Band Telecom Planning and Operations, to be published in TDA Progress Reports.

[9] Treinish, Lloyd A., et. al., Implementation of Mesoscale Numerical Weather Prediction for Weather-Sensitive Business Operations, Proceedings of the Nineteenth International Conference on Interactive Information and Processing Systems for Meteorology, Oceanography and Hydrology, American Meteorological Society, in press, February 2003.