TPF Interferometer Architecture Drivers and Implementations[1,2]

Gene Serabyn et Bertrand Mennesson
Jet Propulsion Laboratory
California Institute of Technology
4800 Oak Grove Drive
Pasadena, CA 91109
818-393-5243
gene.serabyn@jpl.nasa.gov

Abstract—One of the proposed architectures for NASA's Terrestrial Planet Finder (TPF) Mission is a multi-telescope infrared nulling interferometer. To provide adequate resolution to separate potential planets in a stellar system's habitable zone from the nulled star itself, rather long observing baselines and structures are called for. However, the multiple requirements of deep starlight rejection, high angular resolution, a rapid signal modulation capability, and applicability to a large number of stars over a wide range of distances cannot adequately be met with a simple two-element, single-baseline nulling interferometer. To meet these requirements, multiple baselines, together with the concomitant multiple telescope apertures and multiple levels of beam combination, will likely be necessary. However, because multi-baseline approaches significantly increase the scale of the optical system, careful consideration of the drivers and the potential implementations is needed, in order to avoid excesses in design.

In this paper, the scientific drivers for the interferometer design are first briefly tabulated and explored, with a view to constraining the possible solution space. This is done by linking the experimental drivers to affected aspects of the instrumental design. In particular, the high angular resolution requirement (of order 50 mas) leads primarily to the well understood constraint on the minimum acceptable baseline length (of order 40 m), while the high stellar rejection requirement leads to an increase in the number of apertures, either directly, to provide high-order nulling, or indirectly, through the need to provide a phase modulation capability. The requirement that large numbers of stars be observable leads primarily to the need for high sensitivity, i.e., large cryogenically-cooled telescope apertures (and to an increase in the angular resolution requirement). The desire to observe the nearest stars of all leads primarily to refinements in the overall configuration, such as the ability to provide shorter baseline lengths in some fashion. Of course, all of the requirements which call for more than two telescopes result in the need for multiple levels of beam combination, and so in increased beam combiner complexity as well.

In exploring the numerous goals and derived instrumental requirements, the main conclusion here is that reasonable solutions exists in all areas necessary to effectively carry out an interferometric TPF mission. In particular, maximum structure lengths remain within reach of current and planned rocket fairing constraints, at least one of the beam combiners called for by the various pupil configurations under consideration is readily viable, and finally, it is in fact possible to observe stars at a range of distances, including the nearest ones, with a suitable four-telescope pupil configuration, such as e.g., an unevenly-spaced, phase-modulated, dual-Bracewell configuration. Thus, it is possible to conclude that an interferometer with baseline lengths consistent with realistic spacecraft envelopes is in fact a viable approach for the TPF mission to pursue.

TABLE OF CONTENTS

1. INTRODUCTION 1
2. EXPERIMENTAL GOALS 4
3. PUPIL CONFIGURATIONS 4
4. BEAM COMBINERS 5
5. NEARBY STARS 8
6. SUMMARY 10
REFERENCES 10

1. INTRODUCTION

One of the possible architectures for NASA's proposed Terrestrial Planet Finder (TPF) mission is a multi-telescope nulling interferometer operating at thermal infrared wavelengths [1]. However, the dual requirements of a high level of starlight rejection at the center of the field, and a small inner working distance for planet detection (i.e. good

[1] 0-7803-8155-6/04/$17.00© 2004 IEEE
[2] IEEEAC paper #1074, Version 3, Updated September 30, 2003

response immediately surrounding the optical axis) are difficult to meet simultaneously. This is especially true for the simplest possible nulling system - a two-telescope single-baseline nuller. This is because the two desired goals are at odds: higher angular resolution calls for a longer baseline, in order to have narrower interference fringes, while low stellar leakage calls for just the opposite, a shorter baseline, in order to provide a broader central achromatic null fringe. A simple two-telescope system has the further disadvantage that in order to maintain a deep null, the relative phase between the two telescopes must remain fixed (at the value of π radians), so that interferometric phase modulation of the planetary signal to be detected is then not possible. Thus, the very low frequency planetary signal generated by array rotation would be easily corrupted by drifts and 1/f noise, rendering such an approach unreliable.

In order to overcome these limitations, a number of nulling interferometer configurations based on the use of a larger number of telescopes have been proposed. However, a greater number of telescopes and baselines also increases complexity and cost, and so it is worth examining the reasons for each increment in scale and complexity. The purpose of this paper is to identify tractable approaches which meet all of the experimental goals, within the context of systems more complex than a simple single baseline nulling interferometer.

There are of course a number of desirable experimental goals, including perhaps a higher order off-axis null (higher order than θ^2, where θ is the off-axis angle) for better stellar suppression, the provision of angular resolution high enough to resolve the target system's habitable zone from the star, the ability to observe (and null) stars at wide range of distances (including the requisite sensitivity), and the ability to distinguish planets from exozodiacal light. There are also more mundane goals such as the ability to rapidly modulate the signal (to turn the planetary signal into an a.c. signal), and of course, the most important of all – keeping sizes within limits set by existing or planned rocket fairings. The latter implies baseline lengths short enough to fit within available rocket fairings with only a small number of folds (in the case of a deployable structure), telescope diameters small enough to fit within the fairing, as small a number of telescopes as possible, and backend beam-combining optics (including those involved with short-wavelength control functions) which are not excessively complex.

This paper therefore begins with a summary of the experimental goals, and an exploration of the derived instrumental implications. Next, previously proposed pupil configurations are briefly reviewed, in order to delineate their phase modulation capabilities. Thereafter, we turn to two of the issues that have to date seemed secondary – the requisite beamcombiners needed to bring the light from the array together, and the inclusion of the very nearest stars in the observation list. It is shown that none of these issues presents a major impediment to the overall nulling approach, and appropriate design solutions are discussed. In fact, consideration of the observability of the very nearest stars leads to a pupil solution which has additional benefits as well.

Table 1. Experimental Goals and Instrumental Implications

Experimental Goal	**General Instrumental Capability**	**Specific Requirement**	**Example Solution**
Resolution of Stellar and Planetary Signals	High Angular Resolution	Long Baseline(s)	Large Deployable Structure or Formation Flying
High Stellar Rejection	High Order Null or Interferometric Differencing	Additional Baselines or Phase Modulation	Multi-Baseline Array; Multi-Level Beamcombiner; Phase Chopping
Planet Detection	High Sensitivity; Rapid Signal Modulation	Large Collecting Area; Cryogenic Optics; Phase Modulation	Large Telescope Apertures; Passive Cooling; Phase Chopping; Beamconbiner
Removal of Exozodiacal Light	Odd Symmetry	Odd # of telescopes or Antisym. Phase Chop	Added Baselines; Multi-Level Beamcombiner; Phase Modulation
Observation of the Nearest Stars	High Order Null or Broad Null	Additional Baselines or Short Baselines	Multi-Baseline Array and Multi-Level Beamcombiner; Baseline Switching Capability
Observation of Large Numbers of Stars	High Sensitivity; High Angular Resolution	Large Collecting Area; Cryogenic Optics; Long Baselines	Large Telescope Apertures; Passive Cooling; Large Structure or Formation Fl.

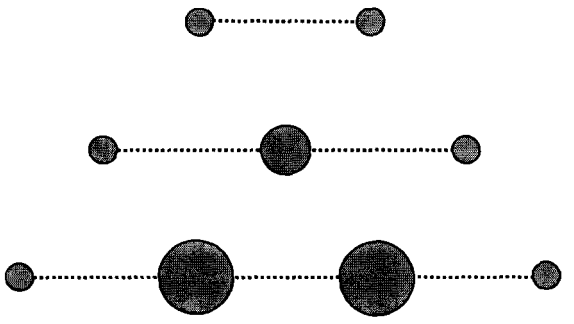

Figure 1. Simple linear nulling configurations. All of the pupil configurations shown have lengths scaled to yield first interference maxima at identical angular offsets. Top: single-baseline Bracewell (BW) case (-1:1 fields) of separation b. Middle: Degenerate Angel Cross (DAC) case (1:-2:1 field ratios) of total length 2b. Bottom: OASES case (-1:3:-3:1 field ratios), of total length 3b.

2. EXPERIMENTAL GOALS

The most general experimental goals for any version of the Terrestrial Planet Finder mission are summarized in the leftmost column of Table 1. These specific goals include those that apply to any given stellar system, including high angular resolution, high stellar rejection, a faint planet detection capability, and discrimination against exozodiacal emission, as well as those that apply to the overall target stellar population, such as the ability to observe a large number of suitable stars, and the capability to observe the very nearest suitable stars. Each of these goals has immediate implications for general and specific instrumental capabilities, also given in Table 1. Finally, example solutions in each area are listed in the last column of Table 1. The table thus provides for a quick connection between the experimental goals and the most relevant aspects of proposed instrumental configurations.

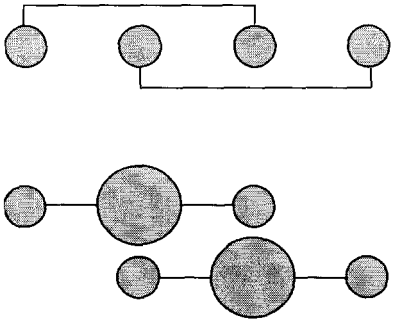

Figure 2. Redundant arrays which allow for phase modulation between pairs of identical nulling interferometers (in green and blue). Top: dual-BW case. Bottom: dual-DAC case.

Since the experimental goals listed are very general, most of the entries need little explanation. Thus for example, there is no need to belabor the basic point that long baselines are needed. However, beyond the basics, an examination of the table leads to the following general conclusions. First, multi-baseline arrays are prominently called out. Second, a recurring entry is phase modulation, which will likely be needed to mitigate or obviate a number of problems, including the rejection of symmetric exozodiacal signals, rejection of 1/f noise, and rejection of some types of instability and drifts. Different types of phase modulation may be considered, but the ability of a given pupil configuration to provide for any phase modulation capability at all may be one of the primary drivers in selecting a pupil configuration. Third, the availability of beamcombiner designs appropriate to given pupil configurations and phase modulation scenarios is a must. Finally, the desire to observe the closest several stars affects the instrument designs to a lesser extent, requiring at a minimum some beam switching capability (e.g., between different baselines or beamcombiners).

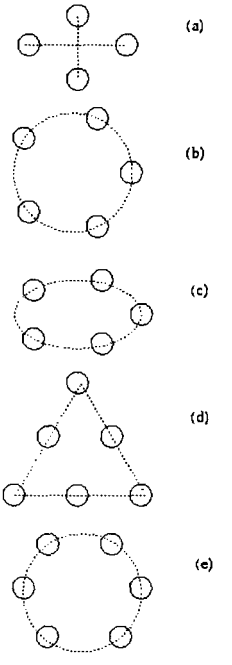

Figure 3. Catalogue of proposed two-dimensional nulling interferometer array configurations: a) Angel cross (AC), b) five on a circle (DARWIN study), c) five on an ellipse (M&M), d) six on a triangle (Mariotti), and e) six on a circle or hexagon (Laurance). (See paper 1 for details.)

The approach followed here is then as follows. First the range of pupil configurations suggested to date is discussed briefly in the next section, with emphasis on which array configurations allow for interferometric phase modulation. Next the question of appropriate beamcombiner designs is addressed. In several cases, new beamcombiner designs are presented. However, not all of the beamcombiner designs

meet the essential requirement of complete symmetry. Finally, we explore how the ability to observe the very nearest few stars affects the design. We thus use these three discriminators, i.e., a configuration's phase modulation capability, the existence of a corresponding symmetric beamcombiner design, and the ability of a given configuration to effectively observe the nearest stars, to assess the suitability of the various pupil configurations to achieving the experimental goals of the TPF mission.

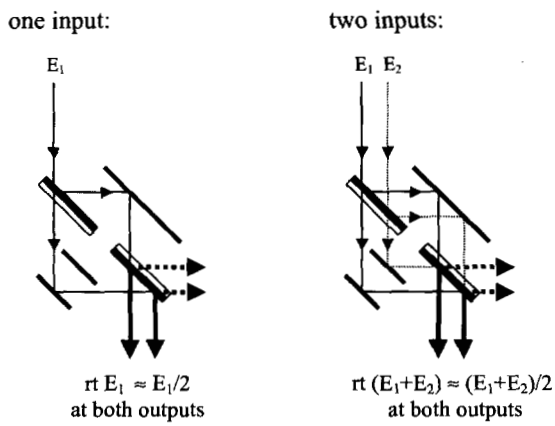

Figure 4. The effect of a reversed pair of beamsplitters on incident fields, for the cases of one and two input beams. In the two beam case, constructive interference (zero relative phase) is assumed. Note that in either case, the two balanced (constructive) outputs are identical, both being given by **rt** (the product of the field reflection and transmission coefficients) times the sum of the input fields (in the first case there is only one input field). The approximation sign applies in both cases if one assumes that **rt** ≈ ½. Note that in the one beam case, roughly half the flux leaves through the other two output ports, while in the two beam case, all of the flux leaves via the constructive outputs. (These constructive outputs become destructive outputs with the introduction of a relative phase shift of π radians between the two input beams upstream of the beam combiner.)

3. Pupil Configurations

The full range of pupil configurations has already been considered in paper 1 (reference [2]), along with a summary of their relative advantages and disadvantages. Therefore the description here will be brief, focusing mainly on their phase modulation capabilities, and in the next section, on their associated beamcombiner requirements.

Figure 1 shows a family of linear nulling interferometers, arranged in order of increasing stellar rejection level. For the three interferometers shown, the off-axis rejection increases from θ^2 to θ^4 to θ^6 from the top to the bottom configurations in the Figure. However, all of these configurations require fixed phase relationships ($\pm\pi$) between the telescopes, and so do not allow for the possibility of interferometric phase modulation. If this is a necessary criterion, all three configurations would thus need to be rejected from further consideration.

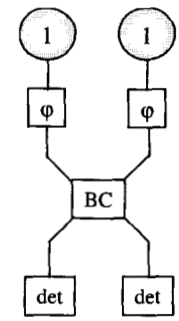

Figure 5. General single-level beamcombiner for the single-baseline (Bracewell) case. The two phase shifters (φ) together introduce the relative phase shift of π radians which turns the balanced constructive outputs of the beamcombiner (BC) into destructive, or "nulling" outputs. Only the BC's two nulling outputs are shown. The peak efficiency is unity.

We therefore next turn to the family of linear dual-nulling interferometers (Fig. 2). The idea here is to build a pair of nulling interferometers, using any of the nuller configurations shown in Figure 1, and to combine the nulled outputs of these interferometers with a relative phase shift [1]. By changing the relative phase between the nullers, the surviving off-axis signals can be modulated.

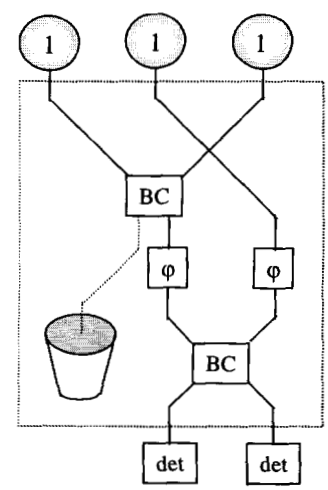

Figure 6. Two-level beamcombiner for the DAC pupil configuration, for identical telescopes. The first layer of beam combination is constructive, so no prior phase shifters are included. The system is asymmetric in that the light from the two outer telescopes goes through an extra beamcombiner. This extra beamcombiner must have beamsplitters with **rt** = ½. The peak efficiency is 2/3.

Figure 2 shows the first two examples in this family: the dual-Bracewell (dual-BW) case, and the dual degenerate-Angel-cross (dual-DAC) case. Although phase modulation can be applied in these cases, it is important to note that in the systems shown, this ability comes at a rather high price: a doubling of the entire optical system.

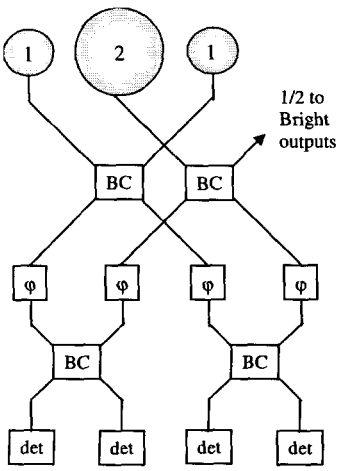

Figure 7 Two-level beamcombiner for the DAC pupil configuration, assuming telescope diameters scaled so as to give the desired 1:2:1 field ratios. Again one third of the light is not used.

Of course, one is not a priori constrained to one-dimensional layouts, and Figure 3 shows several proposed two-dimensional layouts for nulling interferometers. Of these, only the last two provide for phase modulation capabilities between sub-nullers [2-4], with the triangular configuration allowing for switching between three DAC-like arrangements along the sides of the triangle (with the corner telescopes shared), and the circular configuration allowing for a variety of phasing schemes of sub-nullers consisting of suitable fractions of the light from four telescopes [3,4]. One such design, the "bow tie", is further discussed below. However, again a high price must be paid for the ability to provide phase modulation, as the two-dimensional designs proposed to date which allow for phase modulation consist of six telescopes. Note that in the case of an interferometric formation flying array, each telescope would represent a spacecraft, with an additional spacecraft for combining the beams.

4. Beam Combiners

As already discussed, the imposition of a rapid phase modulation requirement seems to eliminate several of the simplest configurations proposed to date from consideration, leaving essentially the arrays consisting of multiple sub-nullers: the dual linear nulling arrays of Figure 2, and two-dimensional configurations with six telescopes arranged on a triangle or circle (the last two entries in Figure 3). However, any configuration is in reality viable only if a corresponding beamcombiner design exists as well. This remains a somewhat questionable assumption in some cases, because of the field amplitude ratios required. In particular, the individual electric fields need to be scaled (and phased) appropriately in a beamcombiner so as to obtain the exact field ratios required by the nulling array pupil configuration under consideration. This beam combination is difficult in practice primarily because the scaling (and phasing) needs to occur both achromatically and simultaneously for both polarizations. Obtaining a better understanding of the beamcombiner configurations called for by specific pupil configurations is thus in order.

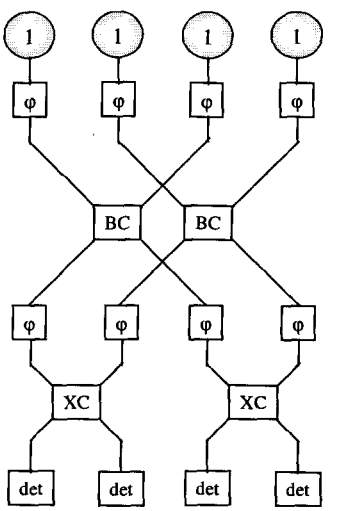

Figure 8. Two-level beamcombiner for the dual-Bracewell case. The cross-combiners, XC, combine the post-nulling residual light, and are assumed to consist of single beamsplitters. The phase shifters just prior to the XCs are assumed able to modulate the phase as needed. The peak efficiency is unity.

Because achromatic and polarization-independent field split ratios are rather difficult to obtain in practice, simplicity and uniformity of treatment here lead us to consider only beamcombiners based on a pair of reversed beamsplitters, in which case the detailed beamsplitter properties become unimportant. This "modified Mach-Zehnder" (MMZ) case allows for perfectly symmetric, constructive beam combination, and can be modified to provide deep destructive interference by the introduction of a relative phase shift of π radians upstream of the beamcombiner [5,6]. In Figures 5-10, the individual beamcombiner modules (BC) are thus assumed to be completely symmetric, constructive combiners (i.e., they function as "adders"). Indeed, complete symmetry through the nulling stage of a multi-layer beamcombiner is a goal for our multi-level beamcombiner layouts as well. We also assume here that the necessary field reversals can be obtained by means of dielectric transmissions (which do break the symmetry of

the system in a small but necessary way). Any phase manipulations, such as an achromatic field reversal, or time-dependent phase-scanning or chopping/stepping, are represented in Figures 5-10 by the "phase-shifter" modules "φ". Hereafter, the phase shifters will be treated as black boxes.

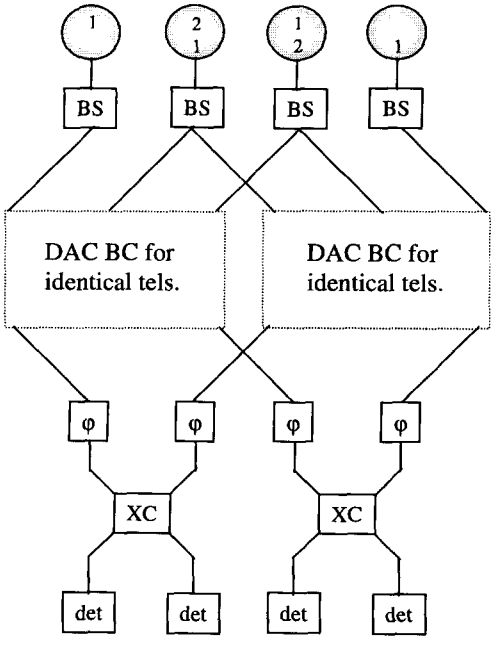

Figure 9. Three-level beamcombiner applicable to the dual-DAC pupil configuration, for the case of identical telescopes. The numbers in the telescopes along the top give the desired field ratios for the two DAC sub-nullers. The layer of beamsplitters (BS) near the top is a series of single beamsplitters with an intensity split ratio of roughly 50:50. This set of beamsplitters introduces an asymmetry between the two DACs, but does not affect the individual DAC nulling stages. The two boxes in the center contain individual DAC beamcombiners, as given in Figure 6, which, as noted earlier, are somewhat asymmetric. The peak efficiency is ½.

A given MMZ beamcombiner has a pair of nulling outputs (Fig. 4), and in general, both of these "nulling" outputs (actually the constructive outputs) are identical. Furthermore, as is shown in Figure 4, the action of a pair of reversed beamsplitters on either one or two input beams is the same, if in the two-beam case constructive interference (zero relative phase) is assumed. Hereafter in the discussion, we will therefore also treat the individual beamcombiners as black boxes, assuming that something akin to a symmetric modified-Mach-Zehnder beamcombiner lies within, and that two equivalent outputs are produced, each of which scales the inputs by **rt**, the product of the reflection, **r**, and transmission, **t**, coefficients of the individual beamsplitters. These general properties can then be applied to build up more complex multilevel beamcombiners. For heuristic purposes, one can generally assume that **r** and **t** are such that the MMZ output fields are half the input fields, but this is not rigorously necessary in most cases.

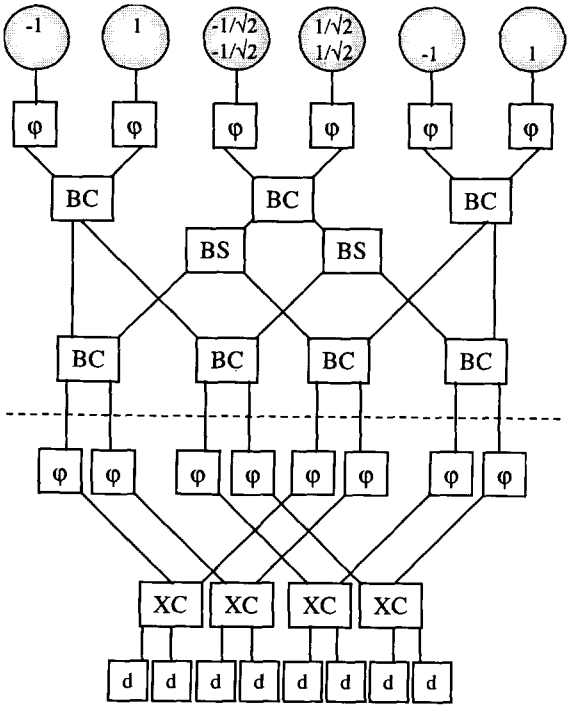

Figure 10. Three-level beamcombiner for the bowtie pupil configuration. The numbers in the telescopes along the top give the desired final field ratios for the two subnullers. The pair of 50:50 beamsplitters (BS) near the center of the layout generate four beams with relative field amplitudes of $1/\sqrt{2}$. These beamsplitters are a source of asymmetry, which again do not affect the individual subnullers. With such 50:50 beamsplitters in place, the peak efficiency is 0.97. The nulling is completed at the level of the dashed horizontal line.

A single level of beam combination then consists of a pair of phase shifters, together with a symmetric beamcombiner. Without phase shifters, the result is a field "adder", while with a pair of phase shifters introducing a relative field reversal, the net result is a field "subtracter".

The general beamcombiner for a single nulling baseline is the simple case just described (Figure 5): a pair of phase-shifting units followed by a BC unit. In this case the phase-shifters provide only a fixed π-radian field reversal (i.e., no phase modulation capability).

In combining the light from more than two telescopes, several stages of beam combination are necessary, if, as is usually the case, the beams are combined pairwise. Thus with four telescopes, in general two levels or layers of beam combination are necessary, while in the six telescope case,

in general three layers of beam combination are necessary. It is therefore obvious that the beamcombiner complexity is minimized by minimizing the number of telescopes.

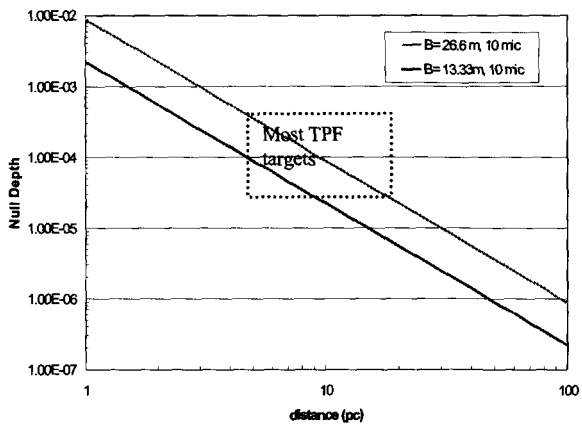

Figure 11. Null depths attainable on solar-type G2 stars at a range of distances, with an evenly-spaced dual-BW configuration. The total end-to-end length assumed is 40 m, and the nulling baseline lengths are 2/3 and 1/3 of the total. While the long baseline provides null depths of order 10^{-4} for most TPF target stars (in the rough distance range of 5 to 20 pc), for stars only a few (1 to 3) parsecs away, the null depths with the same baseline are significantly worse. The short baselines would provide stellar nulls deeper by a factor of four.

Figures 6 and 7 show examples of the beamcombiner layouts called for by the DAC configuration, under two sets of assumptions: identical telescopes, and telescopes scaled in diameter to yield the desired field ratios directly. Both schemes rely on a two-level beamcombiner layout, and neither of these layouts allows for phase modulation. Both layouts have a peak efficiency of 2/3. Note that in the identical telescope case (Figure 6), the beam combination is not completely symmetric, as two of the beams pass through an extra beamcombiner, with associated unbalanced amplitude (and phase) effects. For this first beamcombiner, it is required that **rt** = 1/2. The second DAC beamcombiner (Figure 7) has complete symmetry, but requires telescopes with diameters differing by a factor of two.

Turning to beamcombiners and approaches compatible with phase modulation, Figure 8 shows the generalized beamcombiner compatible with the dual-Bracewell approach (which has unity peak efficiency). The beamcombiner layout is the same as that of the Keck Interferometer Nuller [7], which also uses four apertures (but arranged in a rectangle). In the Figure, "XC" refers to the "cross-combiner", which combines the residual (already nulled) beams. This final post-nulling beamcombiner layer, which provides the phase modulation capability through its set of phase shifters, need not be achromatic, and so it can be considered to be based on single beamsplitters, with a power split ratio close to 50:50. A simple scanning mirror can likely be used to adjust the phases prior to cross-combination, if bandwidths which are not too broad are acceptable.

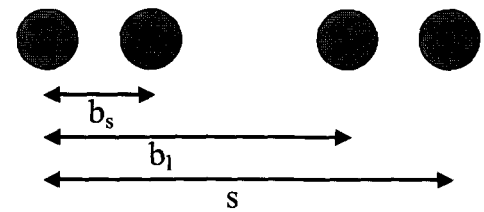

Figure 12. Unevenly-spaced dual-BW configuration. The short baselines (b_s) can be used to null nearby stars, while the long baselines (b_l) can be used to null more distant stars, while simultaneously providing higher angular resolution than in the evenly-spaced dual-Bracewell case.

Note also that in this and other beamcombiner designs shown here, since several phase-shifting elements appear in series, some of the phasing elements are redundant, and can in principle be combined, by sliding them (pairwise) across the relevant beamcombiners.

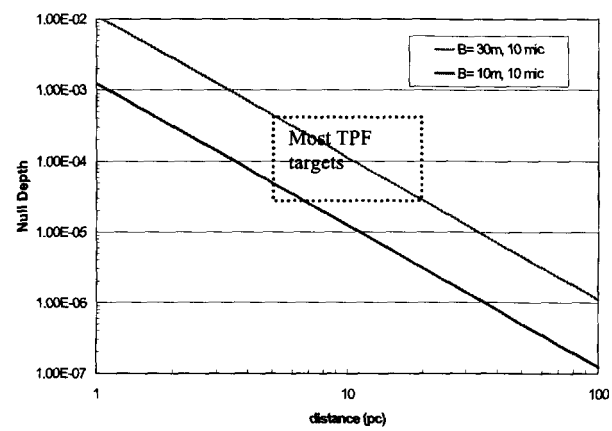

Figure 13. Illustration of the use of both baselines in an unevenly-spaced dual-Bracewell configuration, to null both nearby and more distant stars to comparable levels. A 3:1 long-to-short baseline ratio is assumed. Stars in the 1 to 3 pc range now have null depths on the short baseline comparable to the nulls of the more distant stars on the long baseline. (The curves are again for G2 stars).

Next, Figure 9 shows a beamcombiner compatible with the dual-DAC approach, which is similar in its phase modulation capabilities to the dual-BW case of Figure 8. However, the extra layer of beamsplitters upstream of the individual DAC beamcombiners breaks the symmetry of the system, albeit in an acceptable way, because each individual sub-nuller can be fed with an identical set of inputs from these beamsplitters. The effect of this asymmetry is thus

only evident in the post-nulling stage, where it is much less important. However, more significant asymmetries are present in the individual DAC beamcombiners as already discussed in connection with Figure 6. The peak efficiency for this layout is ½.

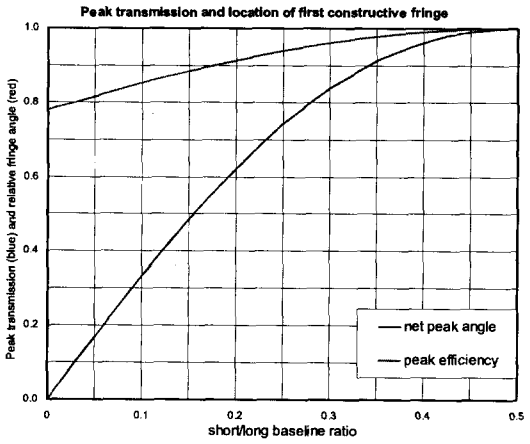

Figure 14. Angular resolution gain (red) and modulated signal efficiency (blue) of the chopped, unevenly-spaced dual-BW case, vs. the short-to-long baseline ratio.

Finally, Figure 10 shows a beamcombiner applicable to the two-dimensional six-telescope configuration known as the "bowtie" [4]. Here the $\sqrt{2}$ field ratio required is provided by a pair of beamsplitters after the first BC layer, which again breaks the symmetry of the system, but in an acceptable manner if the corresponding beamsplitter outputs are sent to the same sub-nullers (as in the Figure). However, the actual **r** and **t** coefficients of these extra beamsplitters must be precisely $1/\sqrt{2}$, independent of wavelength and polarization state, in order to provide the necessary achromatic field ratios (and the $\pi/2$ phase shifts introduced by these single beamsplitters must be compensated elsewhere). With such 50:50 beamsplitters in place, the peak efficiency is 0.97, because with unequal inputs, some light leaks out of the complementary outputs of the second-level BCs.

Figures 5-10 make it eminently clear that beamcombiner complexity and optical parts counts both grow quite rapidly as capabilities (additional baselines, phase modulation) are added. (The dual-OASES beamcombiner layout is not considered in detail here because in complexity it resembles the bowtie beamcombiner of Figure 10). Indeed, in the layout of Figure 10, twenty beamsplitters are called for. In comparison, in the four-telescope dual-BW case (Figure 8), the number of beamsplitters is a more manageable six. These numbers are specific to a planar layout in which pairs of beams are combined at a given beamsplitter, in order that the different layouts be consistent in terms of underlying assumptions. The number of beamcombiners (and beamsplitters) can in fact generally be reduced by a factor of order two, by instead bundling the input beams two-dimensionally, in e.g., a 2 × 2 square array in the case of four input beams, with all four beams going into a single beamcombiner. However, this level of optimization is not pursued here, because the goal of this analysis is to compare the relative complexities of the different beamcombiners on an equal footing. For this goal, a consistent assumption (a planar layout) is more important than design optimization.

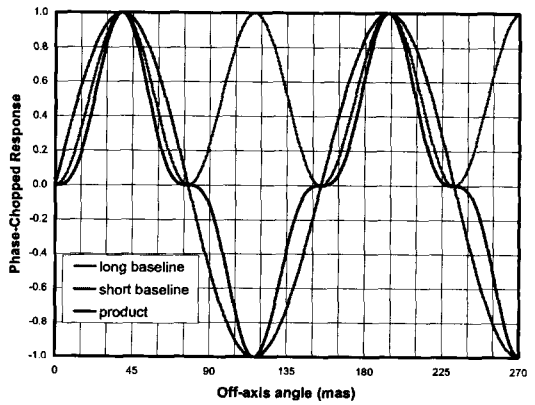

Figure 15. Intensity response for the evenly-spaced, square-wave phase-chopped dual-Bracewell case (the long-to-short nulling baseline ratio is 2:1). The net response (black) is the product of the fringe patterns produced by the long (red) and short (blue) baselines.

Since every additional pair of telescopes brings with it an increase not only in terms of cost, but also in terms of optical and operational (e.g., phasing and alignment) complexity, Figures 5 through 10 make a fairly compelling case for keeping the proliferation of telescopes and baselines to a minimum. Based on these figures, a good compromise between capability and complexity seems to be on the order of four telescopes, which corresponds to two levels of beam combination. Indeed, the phase-modulated dual-Bracewell beamcombiner (Figure 8), which applies to the four-telescope case, is the only multi-baseline case discussed here for which it has proven possible to retain complete symmetry of the optical train from the input telescopes (i.e., equal sizes) through the nulling stage of the beamcombiner, without requiring any specially targeted beamsplitter properties (such as the exact $1/\sqrt{2}$ split ratio required by the layouts of Figures 6, 9 and 10).

5. Nearby Stars

For a single baseline interferometer, linear resolution depends linearly on distance, but null depth depends on distance quadratically. A given instrument configuration thus appears to be somewhat constrained in its ability to observe stars over a wide range of distances. Especially affected are the very nearest stars, because there are relatively few of them, and they differ by the largest amount

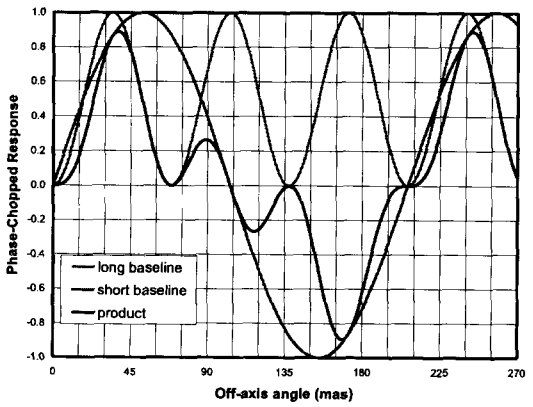

Figure 16. Response pattern for the unevenly-spaced, square-wave phase-chopped dual-Bracewell case, for a long-to-short nulling baseline ratio of 3:1. The net response (black) is the product of the fringe patterns produced by the long (red) and short (blue) baselines. Note the destruction of the second fringe by the interplay of the two factors.

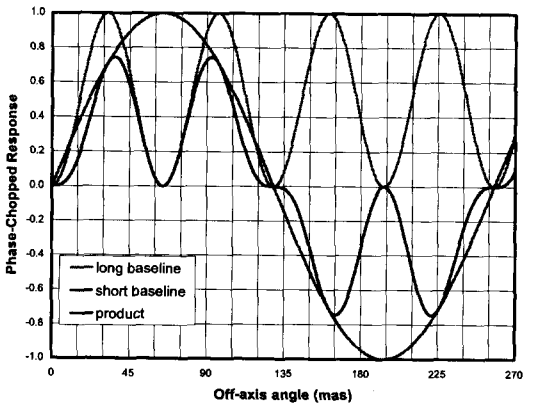

Figure 17. Response pattern for an unevenly-spaced, chopped dual-Bracewell interferometer, for the case of a long-to-short nulling baseline ratio of 4:1. The net response (black) is the product of the fringe patterns produced by the long (red) and short (blue) baselines. In this case, the resonance between the two baseline lengths leaves the shape of the response very close to that of the long baselines alone, with a peak response of 74.4%.

from the "average" observing situation. The situation is illustrated graphically in Figure 11, where it can be seen that for a baseline long enough to provide null depths of order 10^{-4} for "typical" TPF target stars at distances of 5 to 20 pc, null depths for the nearest several stars (in the 1 to 3 pc range) are worse by an order of magnitude or more. The relatively poor null depths obtainable with a single long baseline on the very nearest stars has been viewed as a problem, because observing the very nearest, and hence most familiar, stars is generally seen as a desirable goal. We therefore examine this topic in this section.

It turns out that it is fairly easy to obviate this difficulty, even for the evenly-spaced dual-Bracewell case. First, with the aid of a set of beam switching optics, the individual telescope beams can be recombined to null on the short baselines instead. This very directly provides nulls improved by a factor of four (Figure 11), at the cost only of some beam switching optics.

Moreover, an even better solution exists: the unevenly spaced dual-Bracewell configuration, shown in Figure 12. In this case, the short baselines are made even shorter, and the long baselines even longer, thus providing lower resolution and better nulls on the nearest stars, while simultaneously providing somewhat higher resolution on the longer baselines. This case was briefly considered in an earlier TPF design study phase [8], but only modest shifts in telescope locations were suggested. Here the full range of telescope locations for the unevenly-spaced dual-Bracewell case is considered, and a promising new solution is presented.

An example of the null depths obtainable with such an unevenly-spaced dual-Bracewell configuration can be seen in Figure 13, for the specific case in which the long-to-short nulling baseline ratio is three. This case provides null depths for the nearest stars on the short baselines quite comparable to the null depths provided for the more distant stars on the long baselines, making the observing situations similar for both nearer and farther stars. In other words, the observing situation is now relatively independent of stellar distance.

On the other hand, another advantage also arises from the shift to an unevenly-spaced dual-Bracewell configuration: Figure 14 shows the slight angular resolution gain obtained on the longer baselines. The resolution gain is not as high as naively expected from the baseline increase, because of the interplay of the two fringe patterns (we assume a $\pm\ \pi/2$ square wave phase chop in the cross-combiner layer). A modulated-signal efficiency loss is also incurred. However, even for a long-to-short baseline ratio of 4:1, the modulated efficiency is only reduced by about 1/4, an acceptable level.

Examination of the fringe patterns is also revealing. Generally, the off-axis intensity response patterns for a $\pm\pi/2$ square-wave phase-chopped dual-Bracewell nulling array is given by $\sin(kb_s\theta)\sin^2(kb_l\theta/2)$, where $k=2\pi/\lambda$, with λ the observing wavelength, θ is the off-axis angle in the direction of the baseline, and b_s and b_l are the short and long baseline lengths (Figure 12). These response patterns (which are asymmetric in θ) are plotted in Figures 15-17 for the cases of a uniformly spaced dual-Bracewell array (a 2:1

baseline ratio), a 3:1 baseline ratio, and a 4:1 baseline ratio, respectively. Figure 15 shows the familiar $\sin^3(kb_s\theta)$ pattern of the evenly-spaced dual-Bracewell interferometer. In the 3:1 case, the interplay of the two individual sinusoids (which depend, respectively, on the short and long baseline lengths) causes the partial destruction of the second fringe (Figure 16), and so is undesirable. However, a long-to-short baseline ratio of 4:1 resurrects the second fringe. The 4:1 case provides for a very acceptable fringe pattern, because the resonance between the two baseline lengths results in a response pattern not very different in form from that of the original evenly-spaced case, except that the fringes alternate in sign in pairs, instead of singly. However, although the response pattern is similar, the stellar nulls on the short baselines are now 16 times deeper, and the angular resolution (as measured by the location of the first response peak) is 6% better. There is also the 25% efficiency loss mentioned earlier, but this may be an acceptable price to pay to enable easy observation of the nearest stars.

Since this relatively minor modification to the pupil configuration (translating the two inner telescopes outward along the line connecting the four telescopes) can make the nearby stars issue disappear completely, one can conclude that observing the very nearest stars with a nulling interferometer does not actually present a problem at all.

6. SUMMARY

Several issues applicable to nulling interferometers more complex than the single-baseline case have been considered. Beyond the primary criteria of angular resolution and null depth lie three additional experimental goals: the ability to phase modulate the off-axis planetary signal, identification of a symmetric multi-level beam combiner appropriate to the pupil configuration, and the ability to observe stars over a wide range of distances, beginning with the closest few. Meeting the first of these criteria eliminates a number of the simplest pupil configurations from consideration, and so adds telescopes and baselines, but leaves viable configurations with four or more telescopes. Beamcombiners for a subset of these configurations have been shown to exist here, but the beamcombiners grow quite complex beyond the four-telescope case. A compromise between capability and complexity thus occurs for systems which include four or so telescopes.

Consideration of observations of the nearest stars leads to a simple modification of the four-telescope design, and specifically to the idea of an unevenly-spaced dual Bracewell configuration. This configuration leads to improved null depths on the closest stars, while also providing slightly higher angular resolution on the further stars than the evenly-spaced dual-BW case. Thus none of the issues considered, i.e., the ability to phase modulate the planetary signal, the viability of the beamcombiners, nor the ability to effectively observe the nearest stars, are impediments to the basic interferometric approach to the TPF mission. In fact, as discussed herein, there exists at least one four-telescope nulling configuration, the phase-modulated, unevenly-spaced, dual-Bracewell case, which directly addresses all three concerns.

This work was carried out at the Jet Propulsion Laboratory, California Institute of Technology, under contract to the National Aeronautics and Space Administration.

REFERENCES

[1] "The Terrestrial Planet Finder (TPF): A NASA Origins Program to Search for Habitable Planets." TPF Science Working Group, JPL Publication 99-3, 1999, eds. C.A. Beichman, N.J. Woolf and C. Lindensmith.

[2] G. Serabyn and B. Mennesson, "Pupil Configurations for an Interferometric TPF Mission," 2003 IEEE Aerospace Conference, paper 6.09.07 (paper 1)

[3] "Darwin: The Infrared Space Interferometer – Concept and Feasibility Study Report," 2000, ESA-SCI(2000)12

[4] O. Absil, A. Karlsson, and L. Kaltenegger, "Inherent Modulation: A Fast Chopping Method for Nulling Interferometry," in Proc. SPIE Vol. 4852, "Interferometry in Space, p. 431.

[5] E. Serabyn and M.M. Colavita, "Fully Symmetric Nulling Beam Combiners," 2001, Applied Optics 40, 1668

[6] E. Serabyn, "Nulling Interferometry Progress," in Proc. SPIE Vol. 4838, "Interferometry for Optical astronomy II", ed. W.A. Traub, p. 594.

[7] E. Serabyn, "An Overview of the Keck Interferometer Nuller," 2003, in "Toward Other Earths: Darwin/TPF and the Search for Extrasolar Terrestrial Planets," ESA, in press.

[8] "Summary Report on Architecture Studies for the Terrestrial Planet Finder," 2002, ed. C.A. Beichman, D.R. Coulter, C.A. Lindensmith, and P.R. Lawson, JPL Publ. 02-011, Version 1, Rev. A

BIOGRAPHY

Gene Serabyn is a Senior Research Scientist at JPL, TPF Interferometer Scientist, and the Keck Interferometer Nuller Cognizant Engineer.

Bertrand Mennesson is a Member of the Technical Staff at JPL, TPF Deputy Interferometer Scientist, and an optical engineer on the Keck Nuller Project