Brake Failure From Residual Magnetism in the Mars Exploration Rover Lander Petal Actuator

Louise Jandura
Jet Propulsion Laboratory, California Institute of Technology
M/S 278, 4800 Oak Grove Drive, Pasadena, CA 91109-8099
Phone: 818-354-0373 / Fax: 818-393-6400 / Email: Louise.Jandura@jpl.nasa.gov

Two Mars Exploration Rover spacecraft are on their way to Mars, each with a rover to explore the Martian surface with its suite of instruments. After entering the Martian atmosphere in an aeroshell, the rovers are delivered to the surface in a Lander covered in airbags. Once the landing system comes to rest on the Martian surface and the airbags deflate, three Lander Petal Actuators (LPAs) open the three Lander side petals, enabling the rover to exit the Lander. Approximately nine weeks prior to the scheduled launch of the first spacecraft, one LPA exhibited a brake failure during its final flight stow at Kennedy Space Center. This paper describes the failure, failure analysis, and subsequent rework of two other marginal LPAs, all done without causing the launch date to slip.

The Lander Petal Actuator (Figure 1) is a high torque actuator (3300 N•m output torque) produced by Aeroflex Laboratories, which consists of a brushless DC motor, a power-off brake, 7 stages of planetary gearing with an overall ratio of 324,099:1, and a crowned spline at the output. The LPA required a brake to meet its backdrive torque requirements because of the high efficiency of the planetary gearing. The brake is mechanically engaged when non-powered to lock the motor rotor and ensure that the Lander petals cannot move due to external loads. All LPAs were tested over temperature at the actuator level to restrain 3300 N•m externally applied to the output shaft. Figure 2 shows the cross-section of the motor/brake assembly. The rotating brake plate is attached to the motor rotor. With the brake unpowered, 6 compression springs push the non-rotating brake plate against the rotating brake plate. When the brake is energized to release the motor, the non-rotating brake plate is guided on 3 pins and pulled against the solenoid. The total stroke of the non-rotating brake plate is 0.13 mm. There is a 0.051 mm annular non-magnetic shim between the non-rotating brake plate and the solenoid to break the magnetic flux path and prevent residual magnetism from permanently retaining the brake plate on the solenoid (the stuck open position).

During the final flight stow of the Lander petals using the LPAs, one petal drifted downward under gravity with the spacecraft unpowered. The petal applied about 418 N•m of torque to the LPA output shaft, a load that would not cause the actuator to backdrive with the brake engaged. The problem was conclusively isolated to the actuator using the following test. With the petal backdriving, the spacecraft was powered off and the connectors between the spacecraft, the LPA drive electronics, and the LPA were demated sequentially until the LPA was completely isolated from the rest of the system. The petal was still backdriving, which conclusively placed the failure in the actuator, eliminating the possibility that a stray current in the system or the drive electronics was keeping the brake powered and in the open position. The failed LPA was removed from the Lander and replaced by a flight spare and failure analysis began on the removed LPA.

After visual examination indicated nothing unusual, the motor was operated with no power to the brake. Motor current indicated no load operation, which meant the failure was still intact. Real time X-ray examination showed the brake in a fully disengaged position with no tilting of the non-rotating brake plate. Nothing unusual was observed in the brake assembly. While still under X-ray examination, a reverse polarity voltage was slowly applied to the brake starting at 0 volts, a demagnetizing action for the brake plate. At negative 0.3 volts, the brake plate moved to the engaged position indicating the failure was caused by residual magnetism holding the non-rotating brake plate against the solenoid. The motor stalled when operated again with the brake unpowered proving that the demagnetized brake was now fully mechanically engaged.

Table 1 lists the pull-in and drop-out voltages of all LPA brakes as recorded during acceptance testing and remeasured after the failure. Pull-in voltage is measured by raising the brake voltage until the non-rotating brake plate is pulled in to the solenoid (mechanically disengages). Drop-out voltage is then measured by lowering the voltage until the non-rotating brake plate releases from the solenoid (mechanically engages). The acceptance test requirements specified the pull-in voltage to be <17 VDC, demonstrating operating margin from the minimum flight input voltage of 24 VDC. Drop-out voltage was specified as <10 VDC, but no lower threshold was defined to ensure operating margin above zero input voltage. Since the failed LPA clearly did not have sufficient margin for drop-out, the other flight LPAs were evaluated. Although the failed unit had the lowest measured value of drop-out voltage, SN 003 and 008 were also very low. A proper specification of drop-out voltage defining sufficient margin was needed.

Data from a spare brake assembly was used to determine how drop-out voltage varied with spring force (Figure 3a). Tests showed that adding a second 0.051 mm shim between the solenoid and the non-rotating brake plate raised drop-out voltage significantly without changing pull-in voltage substantially. The required margin point for each condition was determined using the spring force test data and a tolerance analysis of spring force. A quadratic equation was fit to the test data since force in the solenoid is a quadratic function of current and therefore voltage. Two regression curves were plotted with their zero voltage values set equal to the minimum spring force of 3 springs minus the friction force from the alignment pins to ensure a minimum safety factor of 2 on force when 6 springs are present (Figure 3b). The final margin point was calculated as the drop-out voltage values corresponding to the maximum force of 6 springs plus an additional two times the friction force. An additional 0.1 VDC was added to account for measurement scatter resulting in required minimum drop-out voltage values of 2.05 VDC for the 0.051 mm shim and 3.81 VDC for the 0.102 mm shim. It should be noted that the drop-out voltage of 0.6 measured during acceptance testing of the failed LPA works out to a force factor of safety of 0.97. This was a unit that clearly should have failed.

Two flight units (SN 003 and 008) had drop-out voltages <2.05 VDC so they were reworked at Aeroflex with a second 0.051 mm shim to improve their margin. After rework, SN 003 and 008 had drop-out values of 4.09 and 3.85 VDC respectively, which met the minimum requirement of 3.81 VDC for the 0.102 mm shim. The units were retested and returned to the spacecraft. Figures 4, 5a, and 5b are pictures of the disassembly.

Given the close tolerances of the parts in the brake assemblies, there was more unit-to-unit difference in drop-out voltage than expected which was likely due to a larger than expected variation in the magnetic properties of the 15-5 PH brake plates. Although residual magnetism was recognized as an issue in the design (hence the existence of the 0.051 mm shim), the lack of an appropriately specified lower bound on drop-out voltage prevented brakes with inadequate margin from being discovered and reworked earlier.

The two Mars Exploration Rover spacecraft were launched on June 10, 2003 and July 7, 2003 and are on their way to Mars. The Mars landings are scheduled for January 2004. The work described in this paper has not been published before.

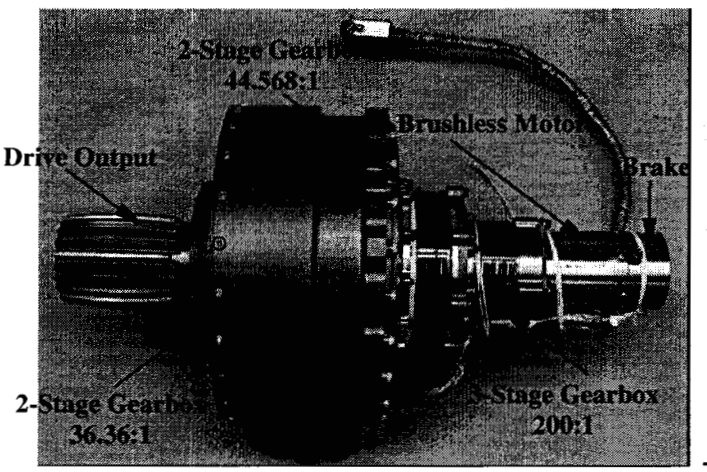

Figure 1. The Lander Petal Actuator

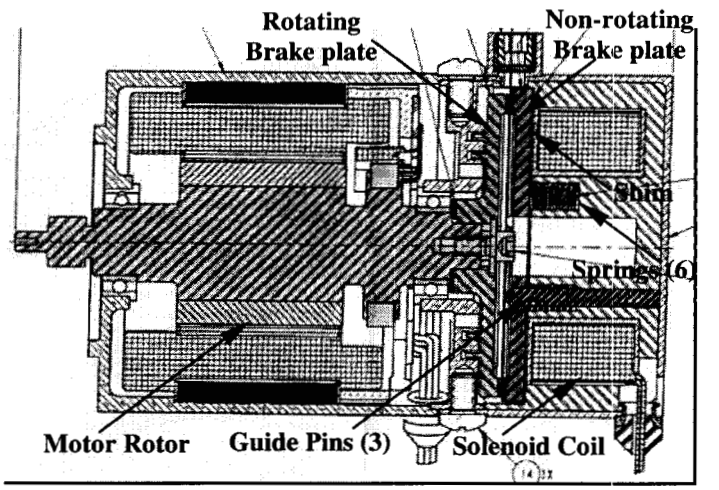

Figure 2. Cross-section of the motor/brake assembly

Table 1. Pull-In and Drop-Out Voltages for all LPAs

SN	Acceptance Test Values (VDC)		As Remeasured (VDC)		Type of Unit
* Failed Unit	Pull-In	Drop-Out	Pull-In	Drop-Out	
001	14.1	2.2	12.3	2.22	Qualification
002	Not avail.	Not avail.	12.9	3.25	Flight
003	14.3	1.9	13.6	0.79	Flight
004	12.0	5.0	15.9	3.79	Flight
005	15.5	1.0	Not meas.	Not meas.	Testbed
006	14.07	2.6	14.1	2.40	Flight
007*	12.7	0.6	12.8	-0.3, 0.29	Flight
008	13.7	1.1	11.7	1.25	Flight
009	12.8	1.72	12.2	1.02	Testbed
010	15.1	0.85	Not meas.	Not meas.	Testbed
011	13.8	2.3	13.7	2.54	Flight Spare

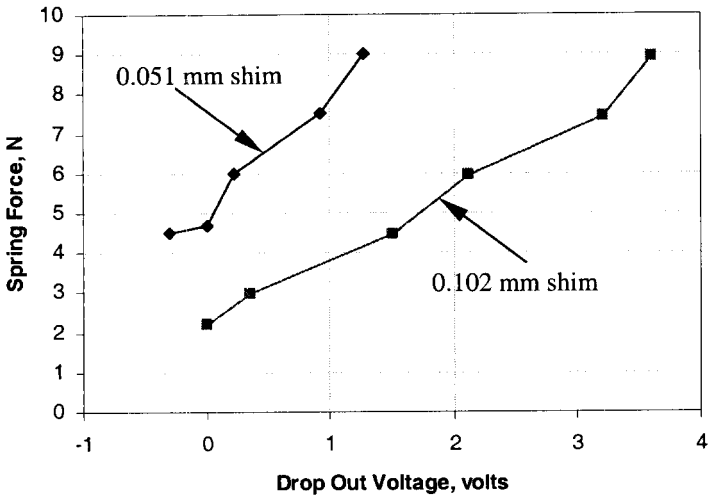

Figures 3a. Test data from a spare brake assembly characterizes the variation of drop-out voltage with spring force for two different shim thicknesses.

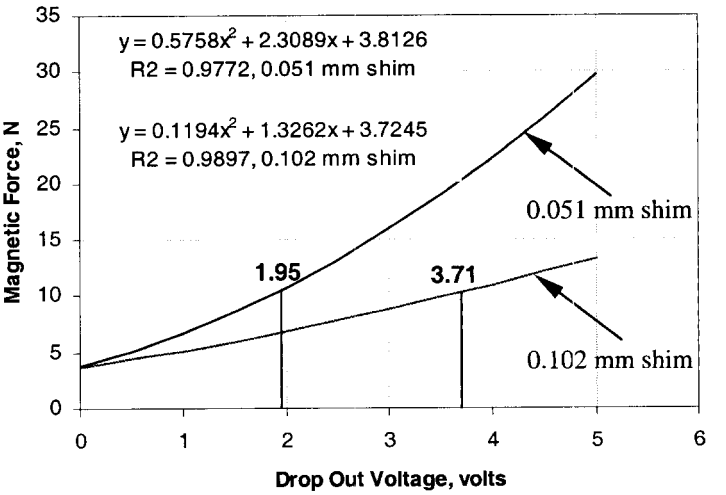

Figures 3b. Regression curves from test data are used to determine the drop-out voltage required for a minimum 2.0 factor of safety.

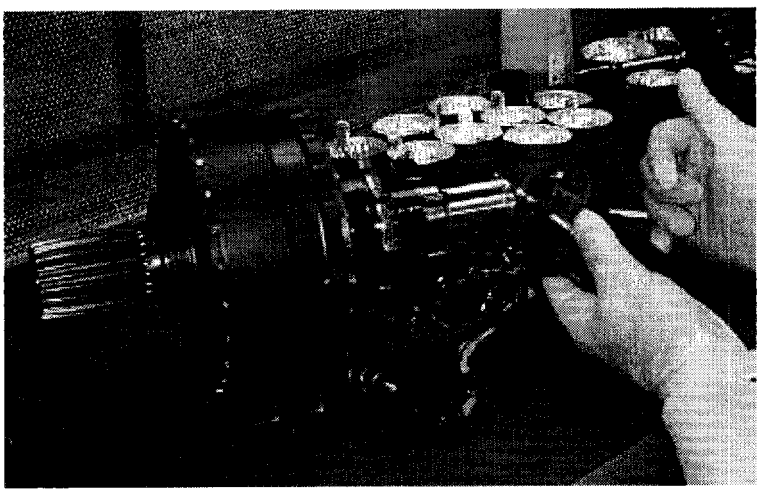

Figure 4. The brake assembly is removed from the Lander Petal Actuator during rework to add an additional shim.

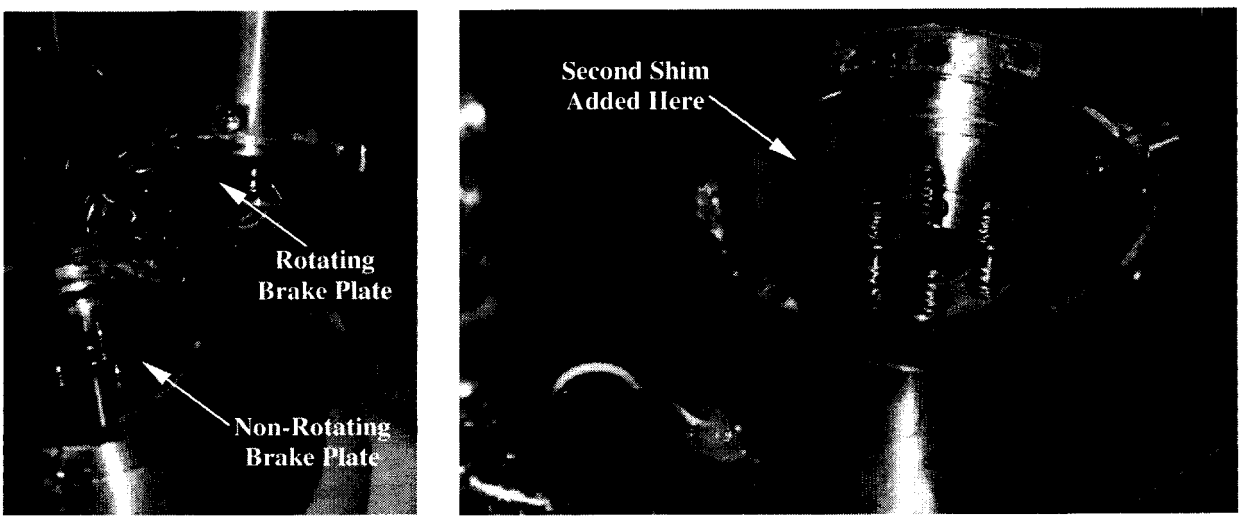

Figure 5a and 5b. Closeup views of the brake assembly during rework