EDFA-based coupled opto-electronic oscillator (COEO) and its phase noise

Ertan Salik, Nan Yu, Meirong Tu, and Lute Maleki

Jet Propulsion Laboratory

California Institute of Technology

Pasadena, California

We need high frequency optical sources with ultra-low jitter

- High speed optical communication
- Ultra-fast all optical sampling and analog-to-digital conversion
- Precision optical measurement

High-speed: tens of GHz,
short pulse: picoseconds to sub-ps pulse width

How to get high frequency sources (f>10 GHz)?

1. Multiply a low-frequency low-noise signal (such as one from a Quartz oscillator):

   •Noise gets multiplied, too!

2. Directly generating the high frequency signal.

Opto-electronic oscillator (OEO)

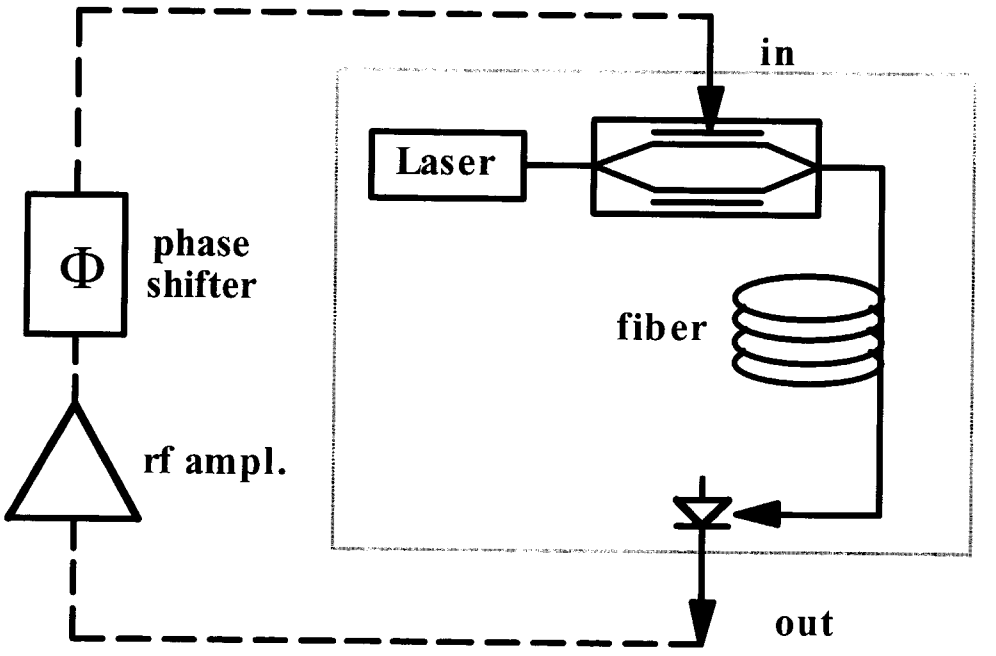

Direct generation of >10 GHz, low phase noise signals

Sources of phase noise

- quantum noise in the laser, due to ASE;
- supermode noise, due to harmonic modelocking, with N uncorrelated pulses;
- gain medium relaxation oscillation;
- mechanical and thermal stability;
- mode locker drive source noise.

Phase noise of OEO

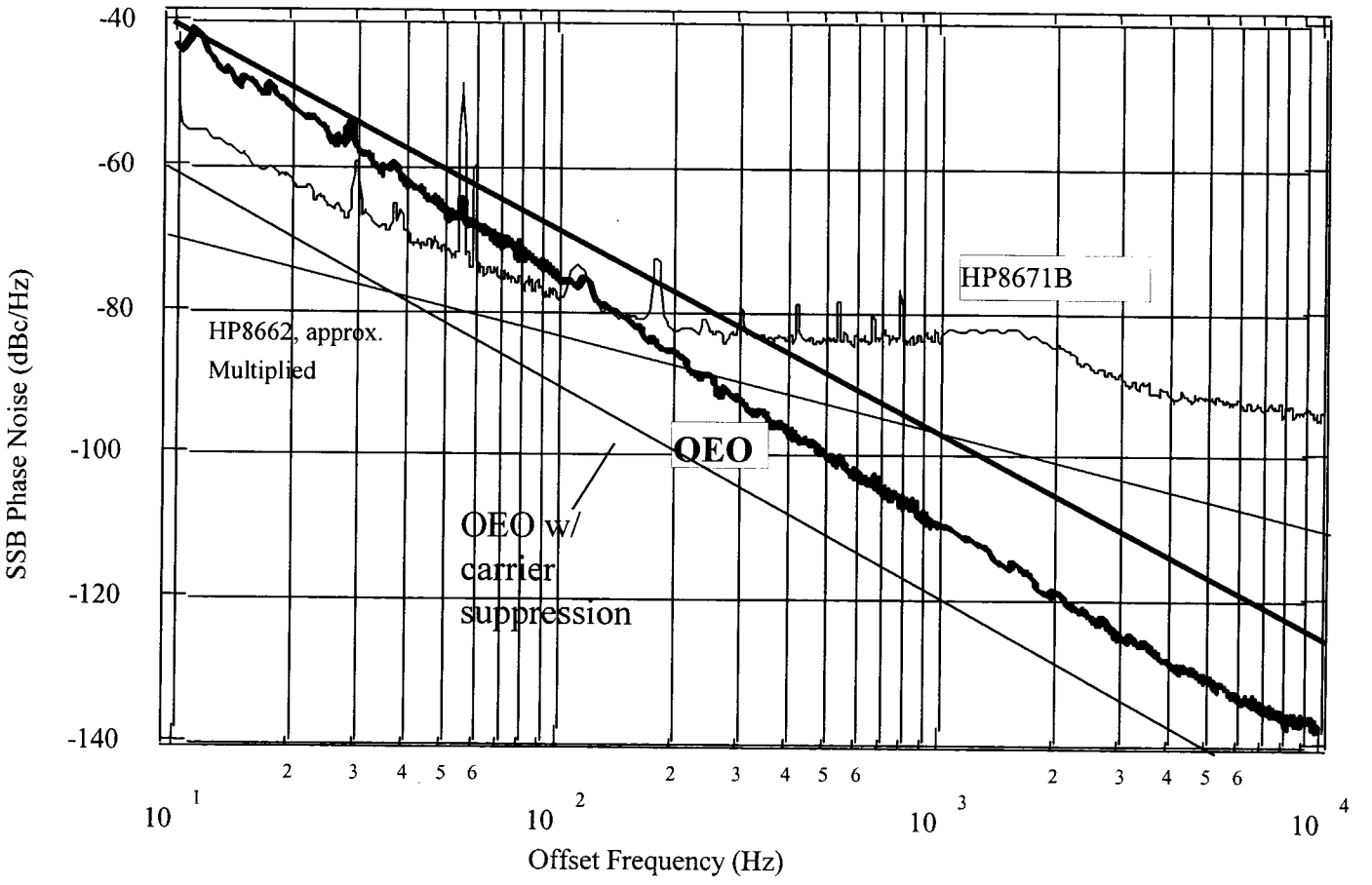

L(f)= -140 dBc/Hz at 10 kHz

Fiber delay improves OEO phase noise performance

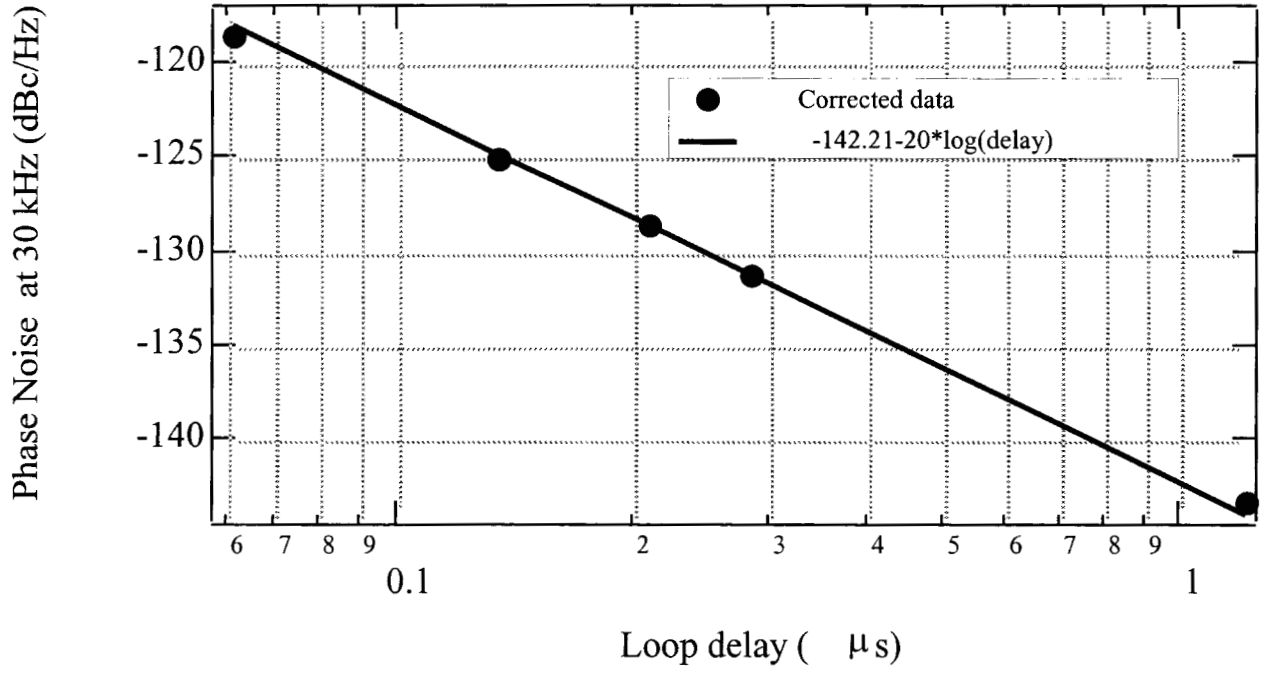

Coupled opto-electronic oscillator: OEO and Mode-locked laser

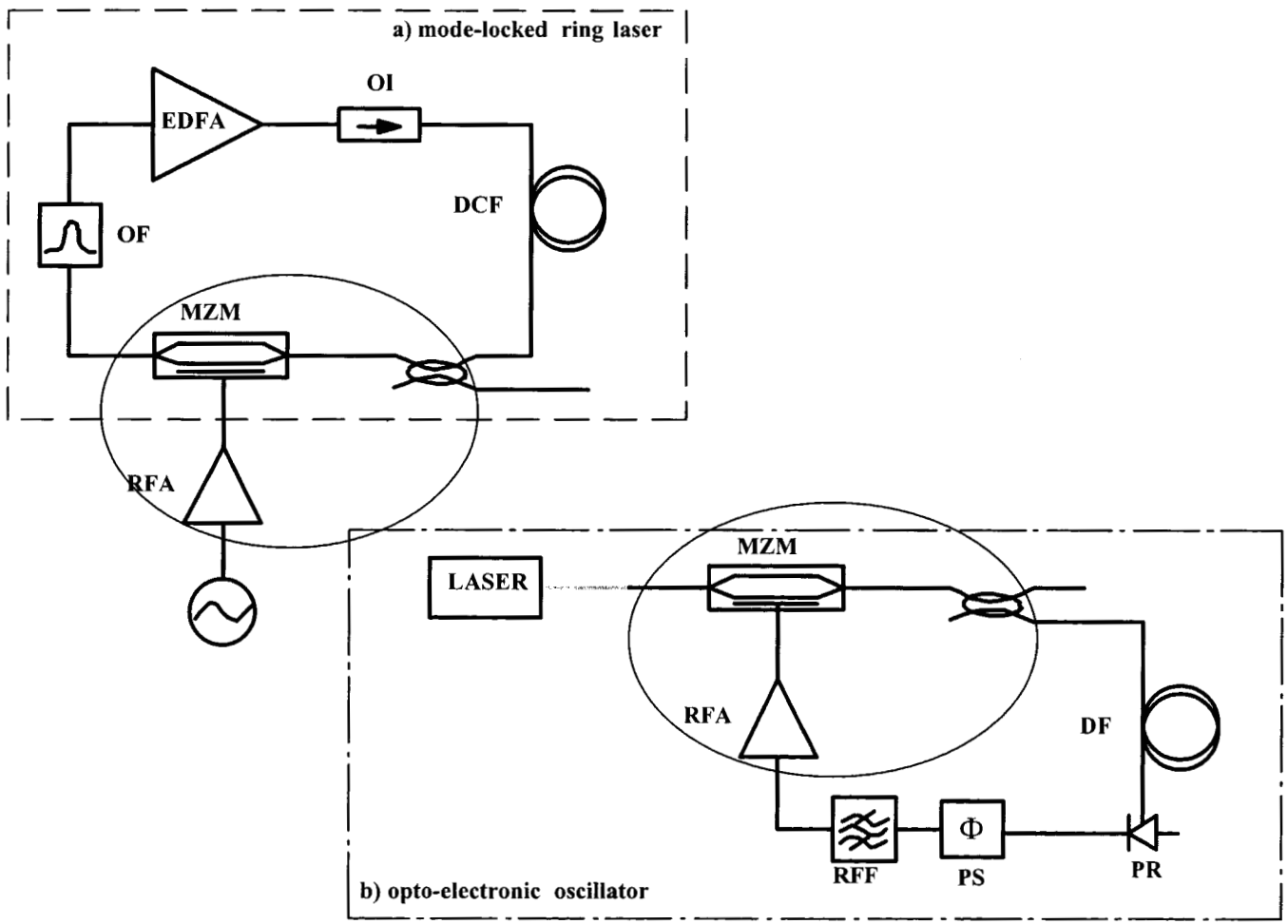

COEO

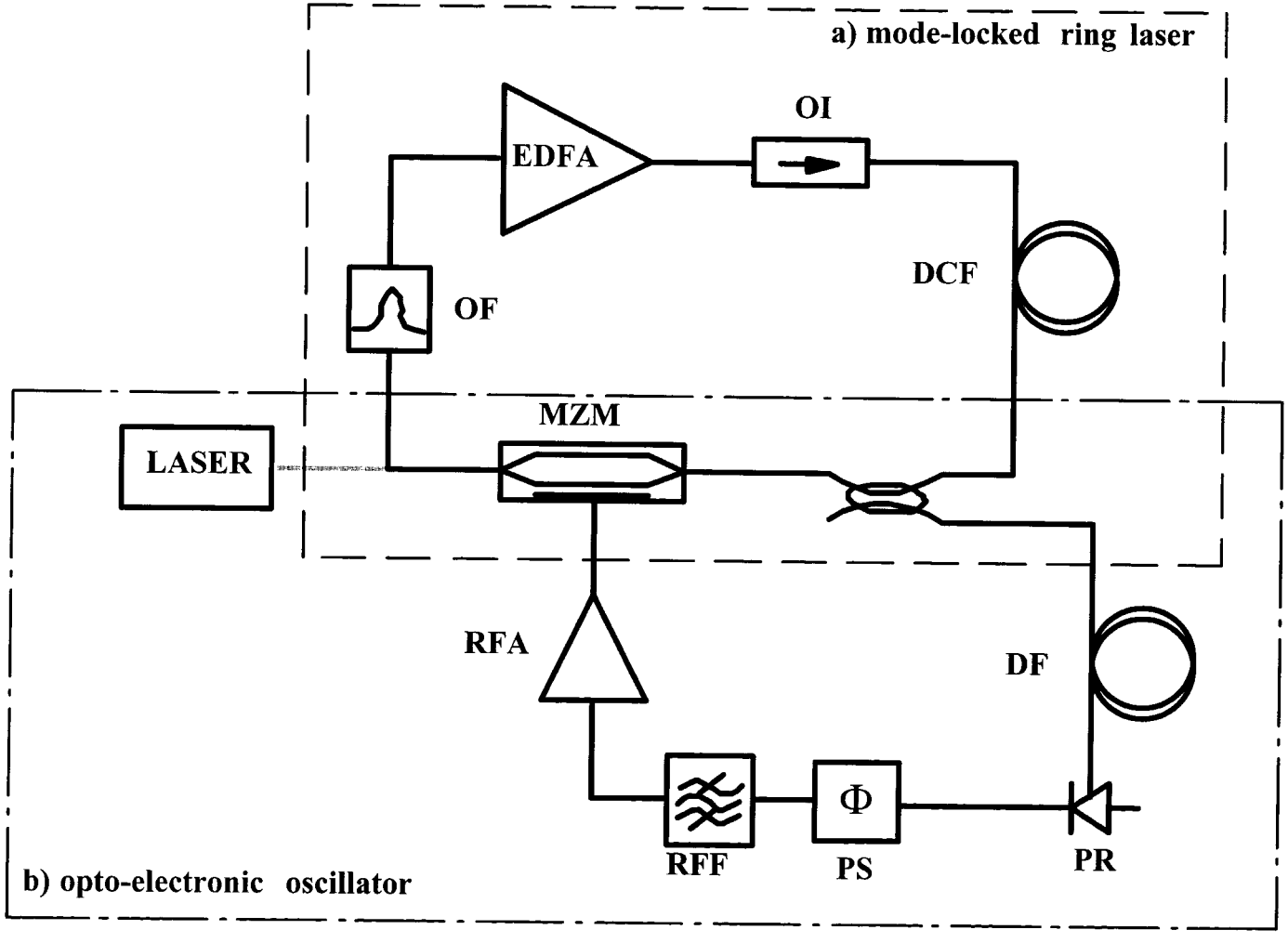
a) mode-locked ring laser
OI
EDFA
DCF
OF
MZM
LASER
RFA
DF
Φ
RFF
PS
PR
b) opto-electronic oscillator

Optical output of COEO

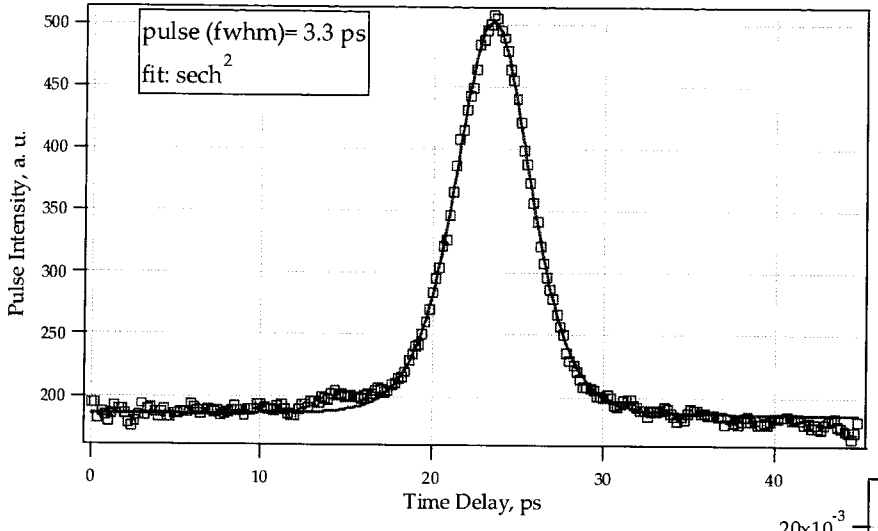

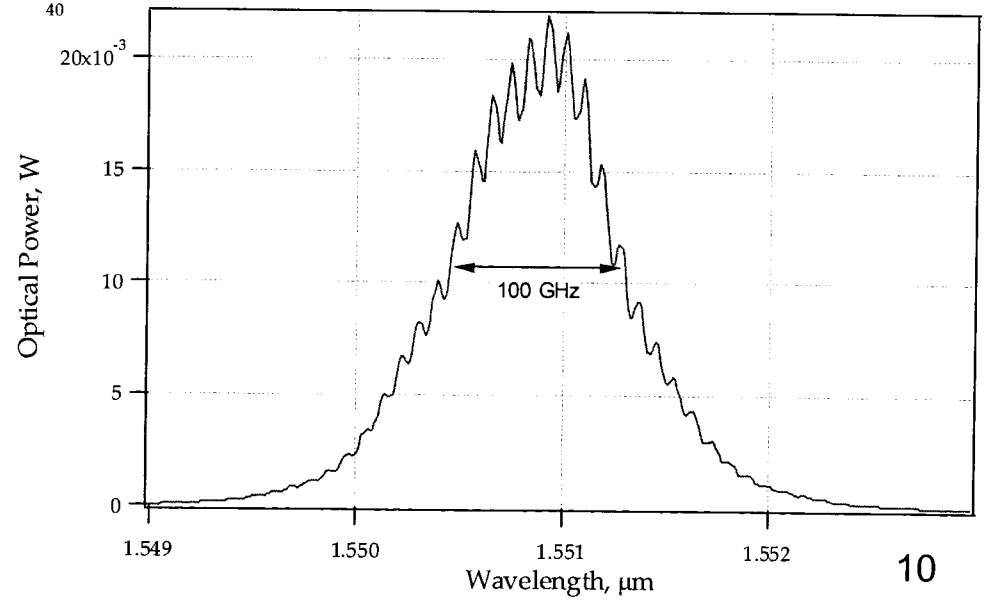

Time-BW product= 0.33
nearly transform-limited
Sech^2 pulses

Fabry-Perot spectrum

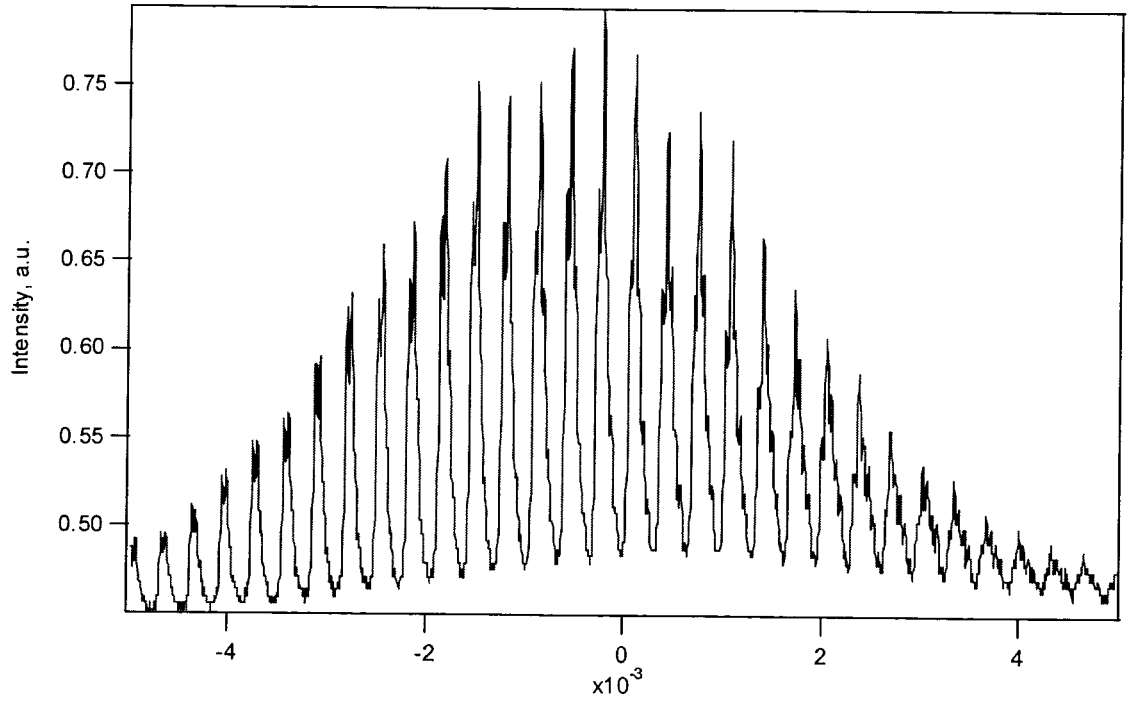

Microwave output of COEO

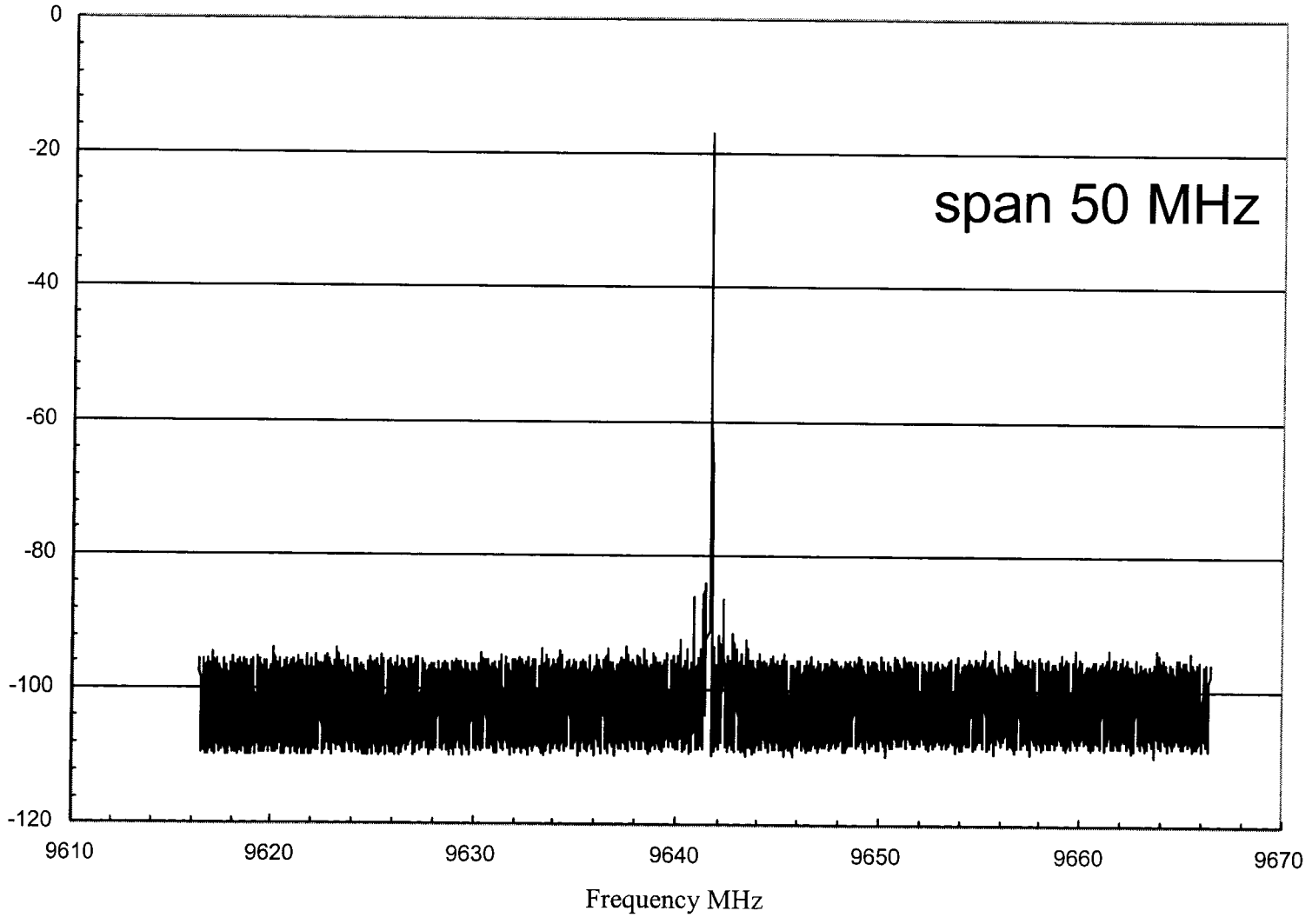

Close-in Noise

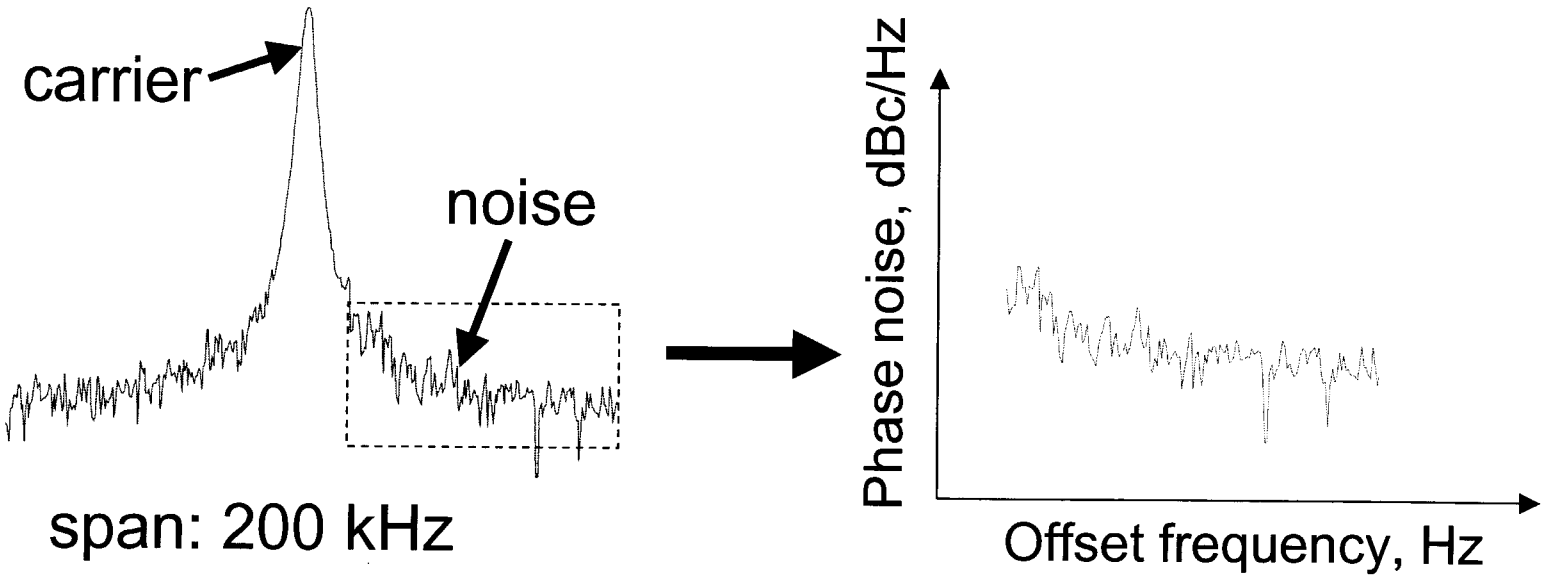

We use homodyne fiber delay line method using mixers as phase detectors to measure the phase noise

COEO Absolute Phase noise

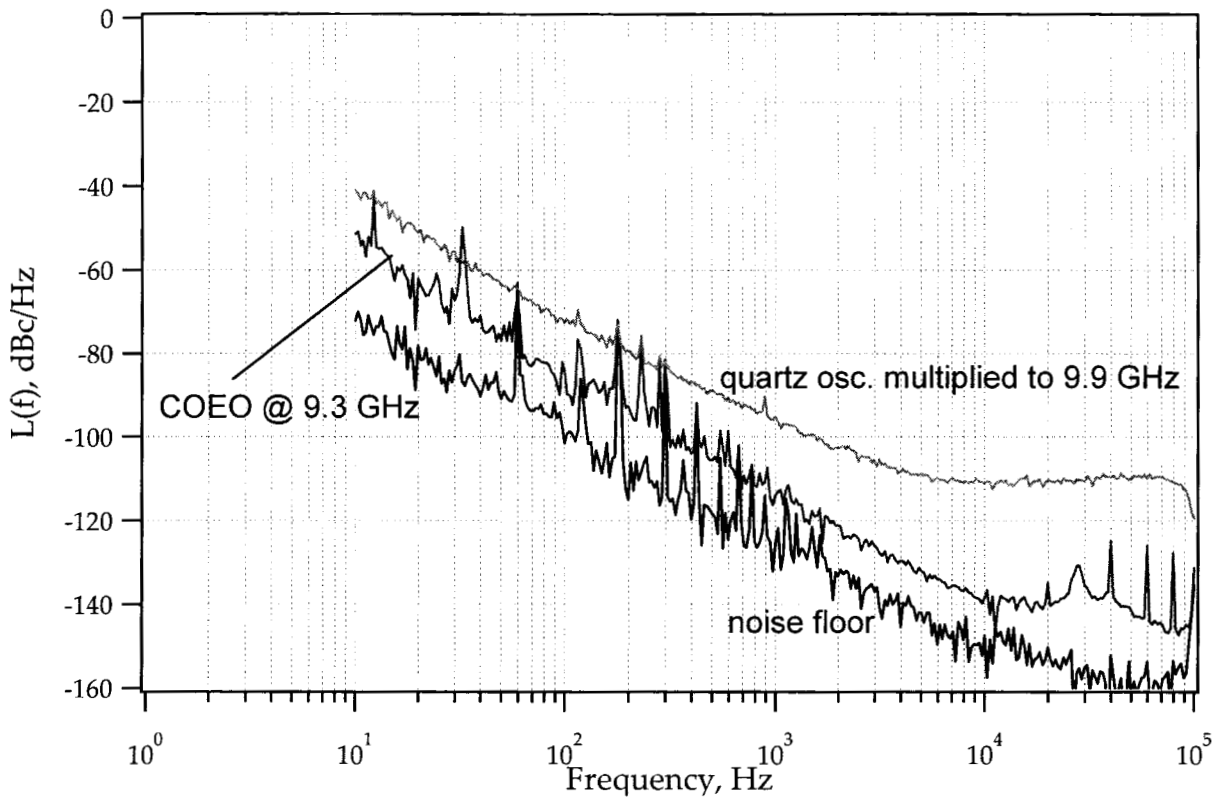

L(f)=-140 dBc/Hz at 10 kHz offset

COEO phase noise compared with a commercial synthesizer

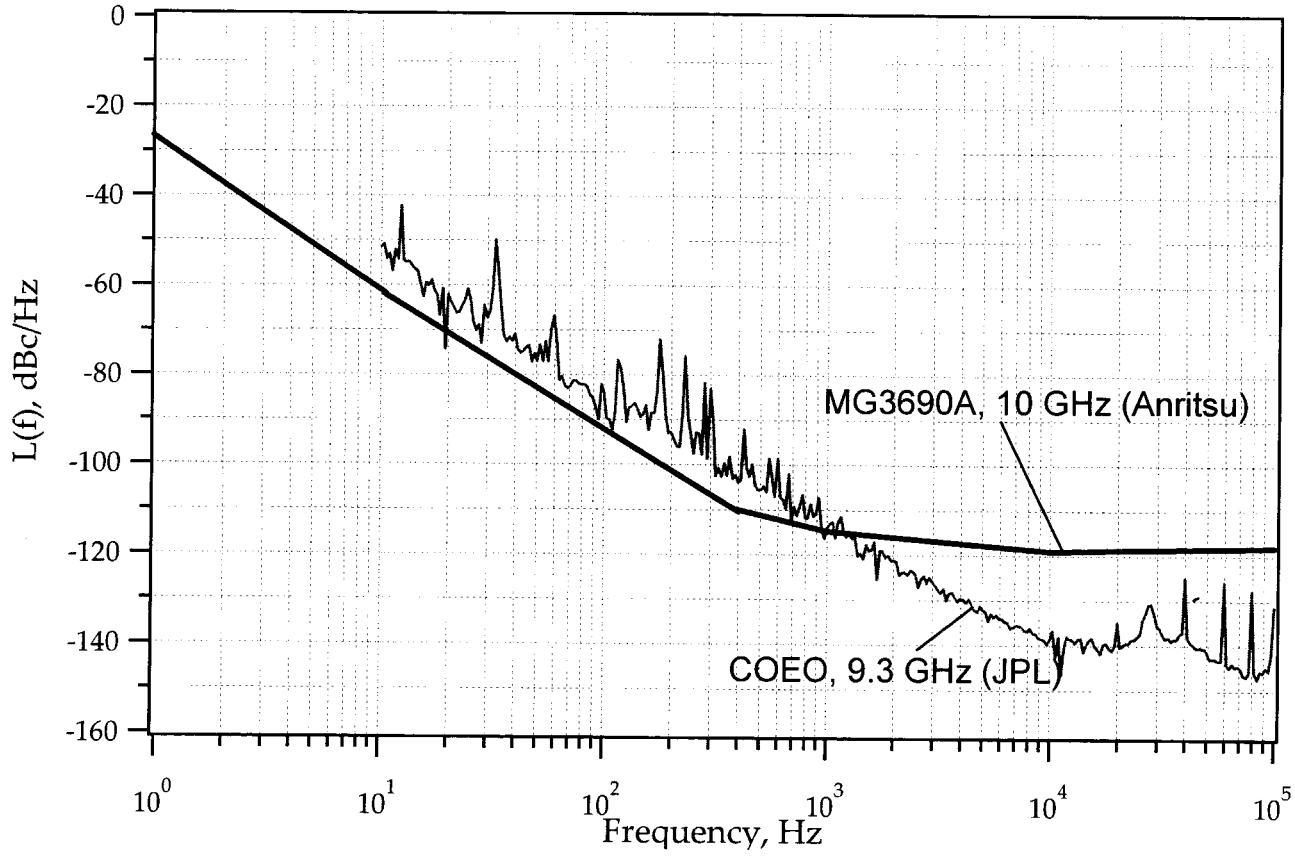

Detailed schematic of COEO

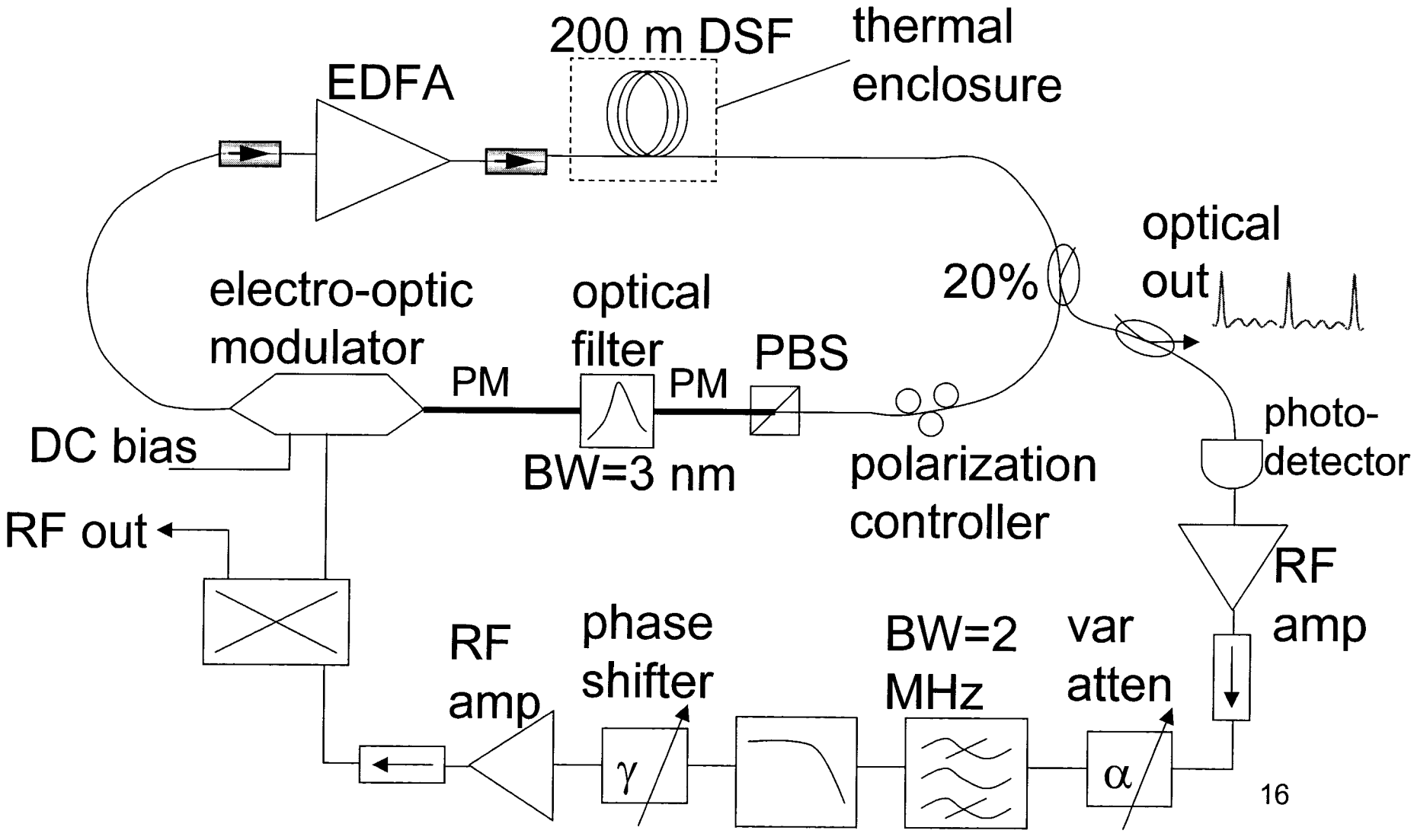

How does COEO work?

- In the fiber laser loop many modes compete (for a 250 m loop, modes are 800 kHz apart)
- The beat nodes of fiber laser modes is detected and amplified
- The beats within the RF filter bandwidth are selected (for a 10 GHz filter, only beat nodes at 10 GHz are selected)
- When the phase of the beat nodes are right they start oscillating, and also phase-lockes the modes of the fiber laser.

COEO oscillation mode selection

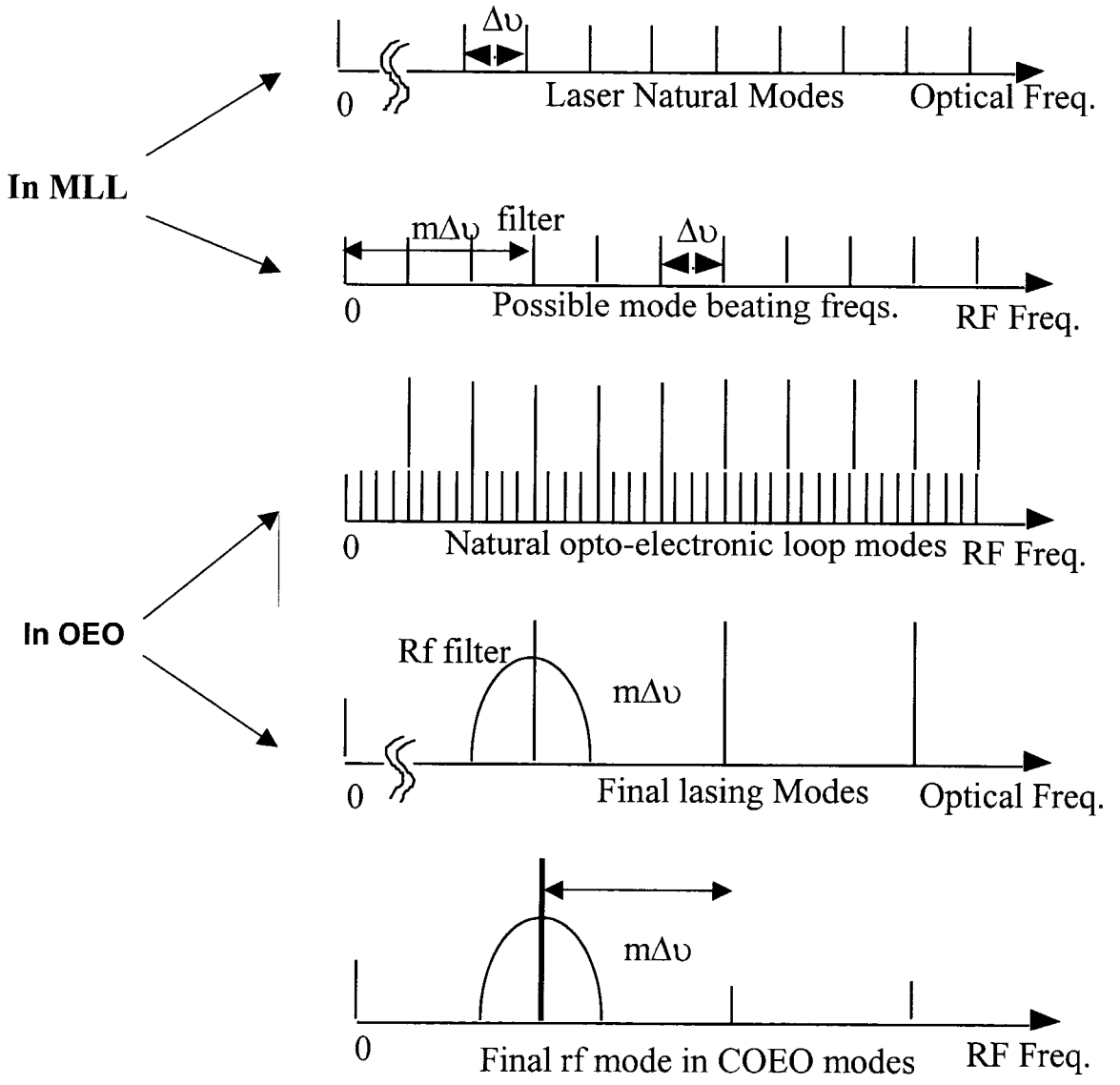

Why does it give low phase noise?

- Like every low-noise oscillator, COEO needs a resonant cavity with high Quality Factor.
- In COEO, mode-locked laser itself acts like a high Q resonant cavity.
- The critical balance between dispersion and nonlinearity in MLL is essential!

Conclusions

- Demonstrated low noise optical pulse and high frequency microwave source, coupled opto-electronic oscillator based on EDFA.
- In 1 kHz-100 kHz range COEO phase noise is 20 dB better than the best commercial synthesizers
- Mode-locked laser loop in COEO acts as the high-Q cavity
- COEO can be built using semiconductor, Raman amplifiers as well.

Slides to show if relevant questions asked
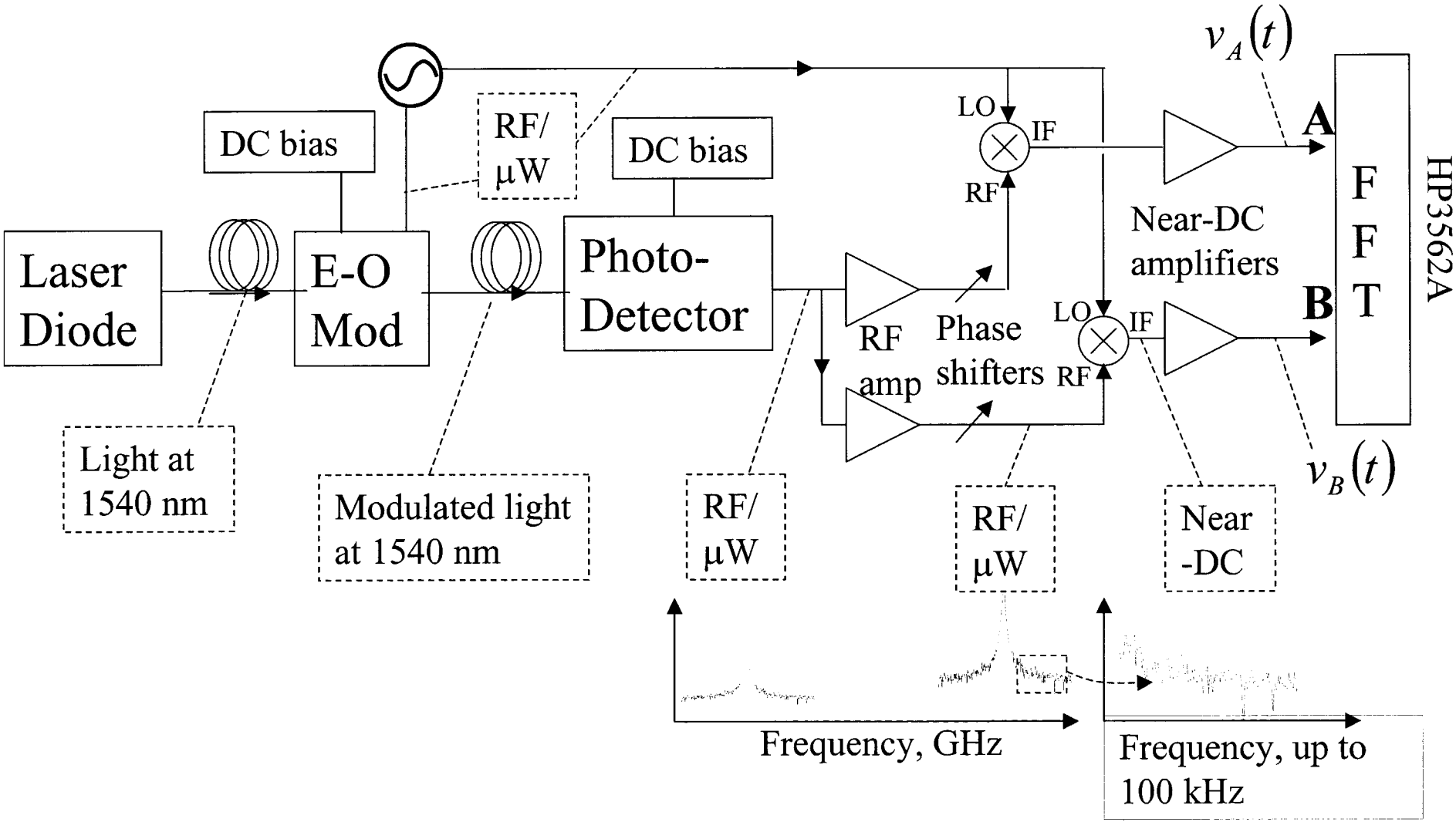
Cross-correlation measurements by Dual Channel FFT Analyzer