Interplanetary Network Directorate (IND)
Deep Space Mission System (DSMS)

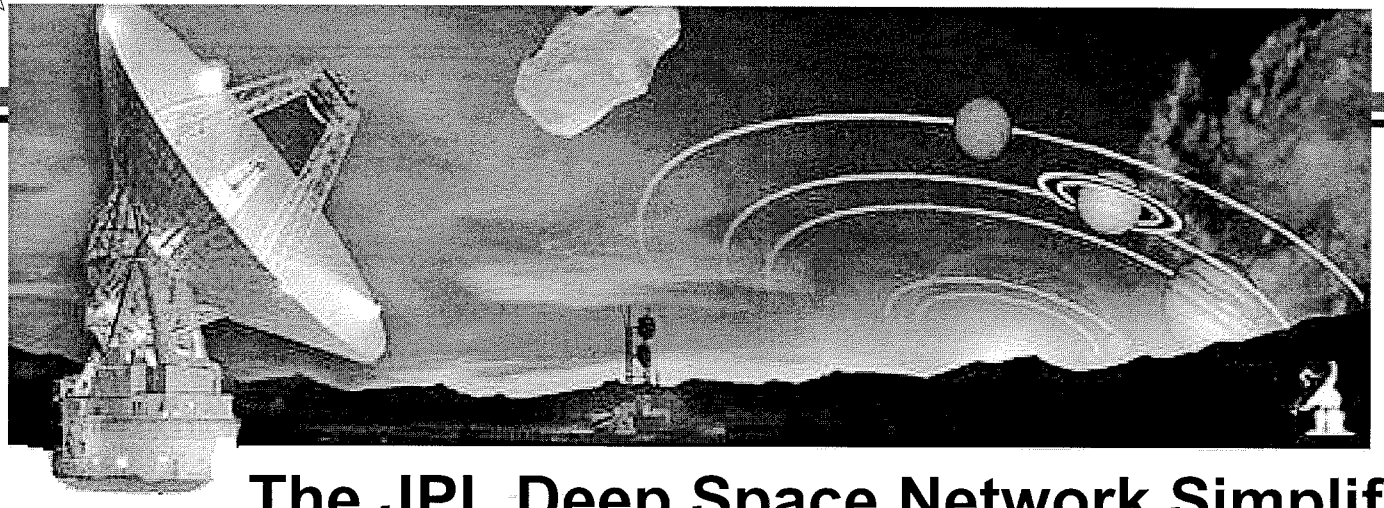

The JPL Deep Space Network Simplification Project (NSP): Lessons Learned 1998 - 2004

Susan C. Kurtik, Jeff Berner, David Berry, Ana Maria Guerrero, Annette Larson, Michael Levesque, John Louie, Scott Markham, Miguel Marina, Andrew O'Dea, Michael Stoloff

SpaceOps 2004
Montreal, Canada
17-21 May

California Institute of Technology
Jet Propulsion Laboratory (JPL)
susan.kurtik@jpl.nasa.gov

Deep Space Network (DSN) Network Simplification Project (NSP): DSN TT&C System Replacement 1998 - 2004

Agenda

- DSN Telemetry, Tracking, and Command (TT&C) Systems
- NSP Project Goals and Tasks
- TT&C System Architecture
- NSP Accomplishments
- NSP Implementation and Deployment Challenges: Lessons Learned

Deep Space Network (DSN)
Tracking, Telemetry and Command (TT&C) Equipment

- **DSN Uplink Command Equipment to:**
  - generate command modulation
  - provide uplink carrier (Exciter and Transmitters)

- **DSN Downlink Tracking and Telemetry Equipment to:**
  - demodulate the received downlink signal (Block V Receiver)
  - decode and process the telemetry data
  - generate the tracking (ranging and doppler) data
    - Navigators use to locate spacecraft and Radio Scientists use to characterize the media that a signal passes through
    - ranging data is measured by correlating a signal sent to the spacecraft with one retransmitted to the ground
    - doppler data is measured by tagging the phase of the uplink and downlink carrier

TT&C Inefficiencies (Before NSP)

- **DSN had inefficient redundancy and complicated interfaces**
  - most of the TT&C hardware was 10-20 year-old, custom designs, difficult to maintain, and failed often in operations
  - obsolete equipment limited ability to build new antennas, had inadequate spares, and technical expertise was missing
  - ranging signal interfaces “hard-wired” uplink and downlink together
  - redundant command processors created interactive failures
  - fiber optic and patch panel interfaces between assemblies complicated operations
  - Six unique controllers, one for each assembly, duplicated many functions and complicated operations

- **Radiometric Data Conditioning at JPL was an independently maintained and operated system, separate from AMMOS**

DSMS TT&C Systems (Before NSP)

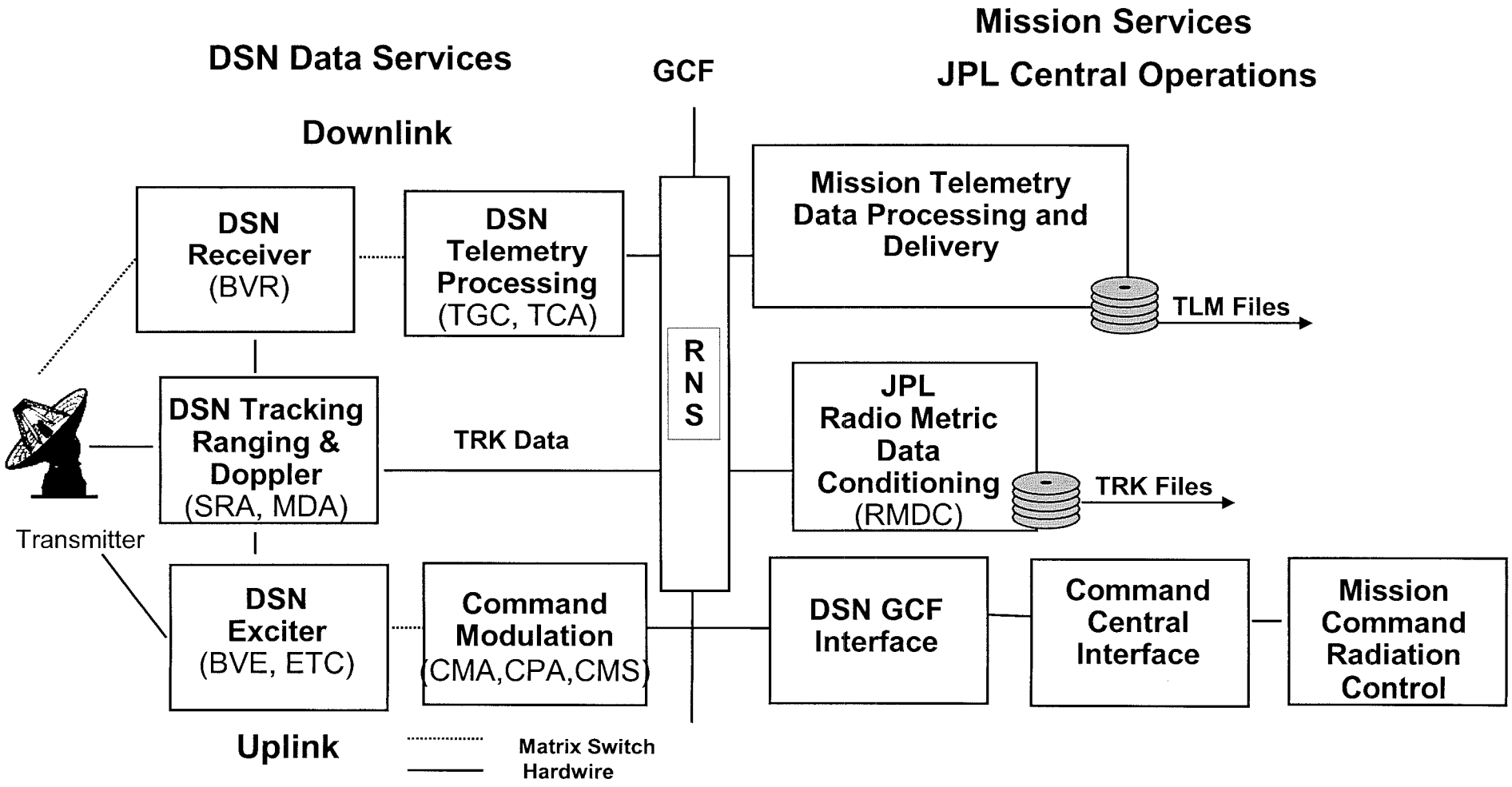

NSP Project Goals

- **Provide more reliable, standardized, and operable TT&C service systems in the JPL Deep Space Network (DSN)**

- **Replace Telemetry, Ranging, Doppler, and Command Subsystems in the DSN, including:**
  - Simplify operational interfaces and minimize number of signal, data and hardware interfaces
  - Consolidate uplink and downlink subsystem controllers, with normal operations to require only one or two operator directives
  - Replace aging, custom-designed and obsolete equipment
  - Use commercial products and industry standards

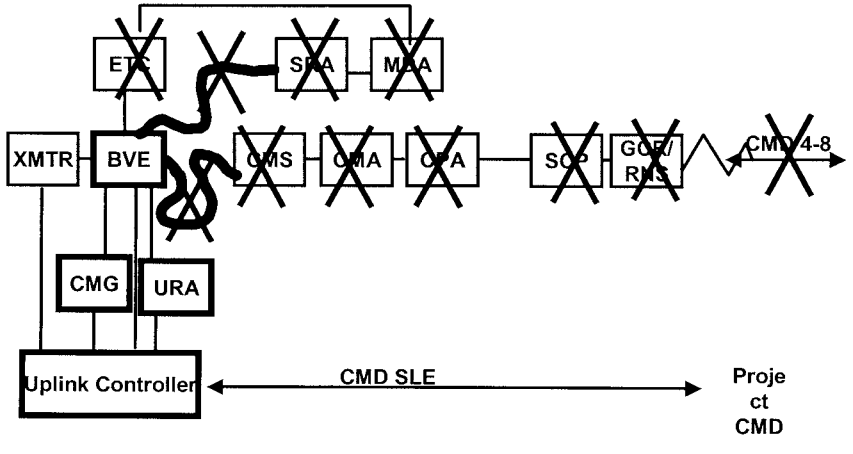

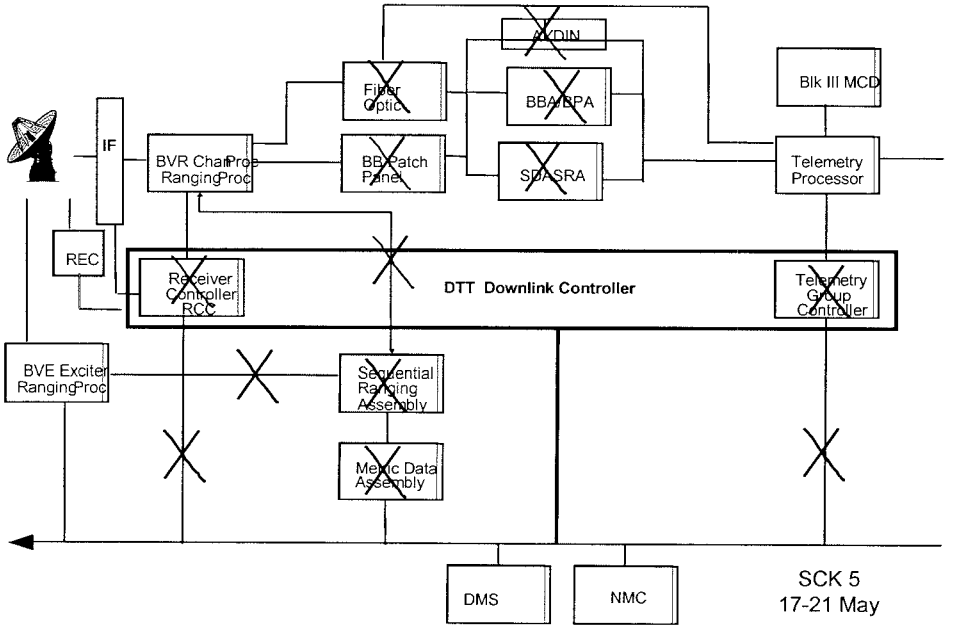

NSP Project Tasks

- **DSN Downlink Consolidation Task:**
  - Replace aging telemetry system with vendor product
  - Replace ranging equipment with commercial DSP boards
  - Consolidate receiver, telemetry, and ranging controllers
  - Design IF switch to support multiple spacecraft on antenna
  - Add new Deep Space Turbo Decoders
  - Add high rate telemetry and beacon tone processing
  - New 0158-Monitor Data for mission users

Turbo Decoders: Powerful coding techniques maximize science return

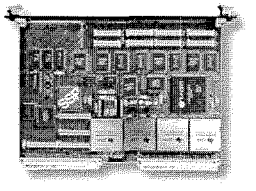

- **DSN Uplink Consolidation Task:**
  - Replace command modulator with vendor product
  - Integrate uplink ranging assembly
  - Consolidate command, exciter, transmitter controllers
  - Add CCSDS SLE CLTU Services

CCSDS Space Link Extension (SLE) Task:

Enables Interoperability and cross support among foreign assets

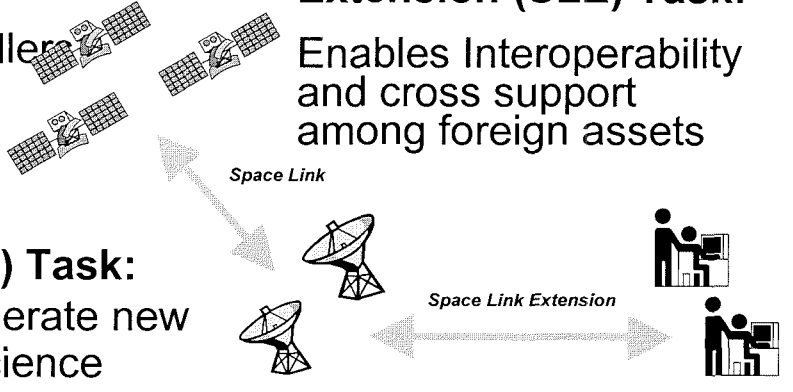

- **AMMOS Tracking Data Delivery Subsystem (TDDS) Task:**
  - Redesign Radiometric Data Conditioning and generate new tracking data products for navigation and radio-science customers

DSMS TT&C Architecture (After NSP)

Simplified End-to-End Service Design

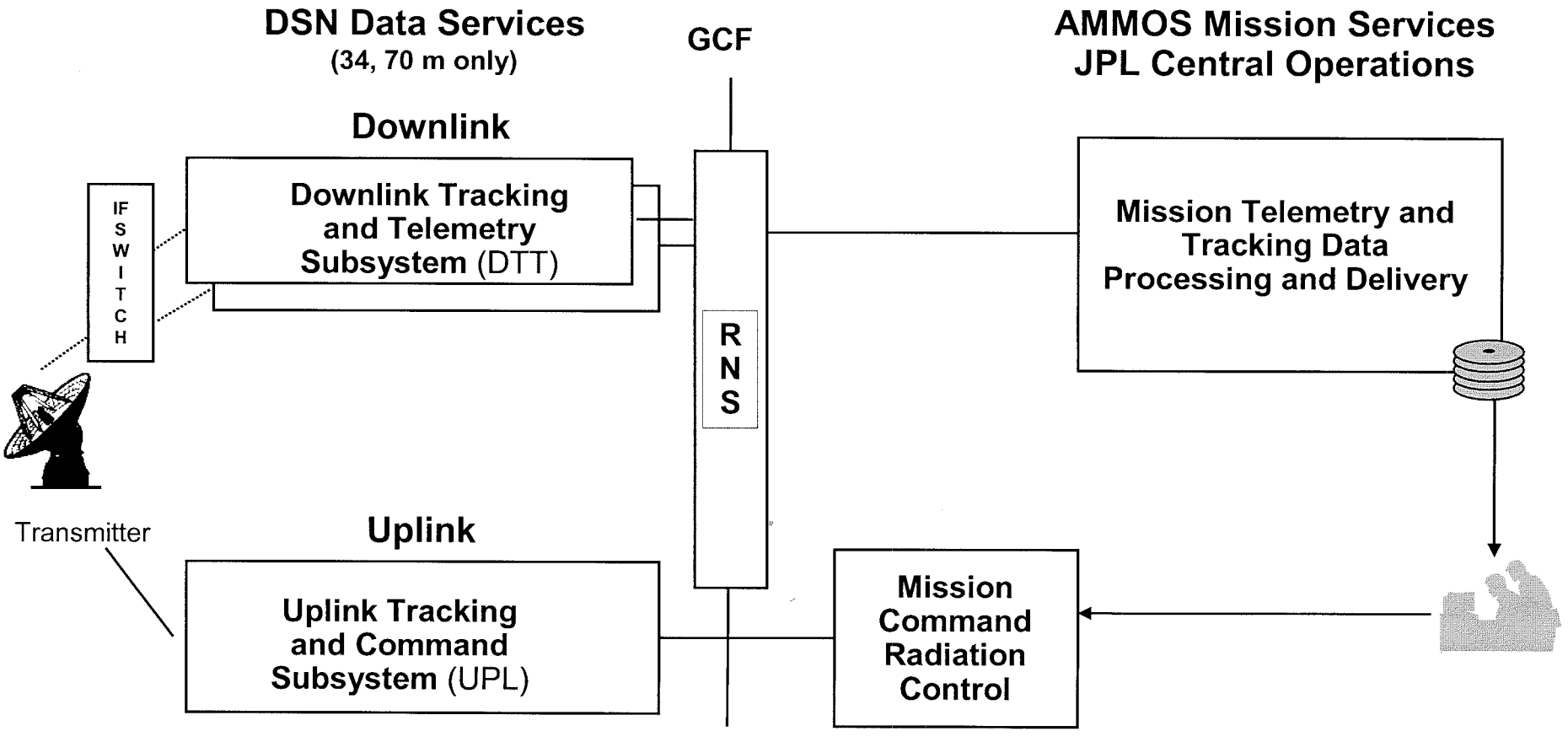

DTT Channel Processor (DCPC)

Downlink Tracking and Telemetry (DTT) Channel Processor Rack

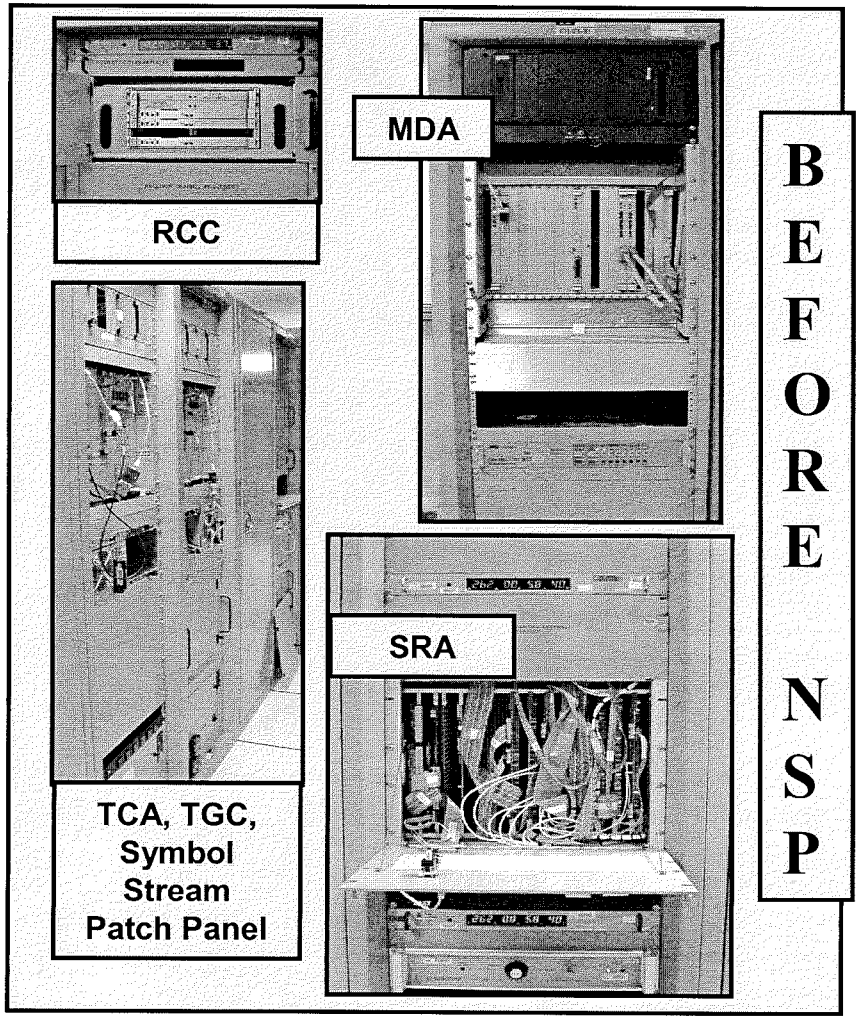

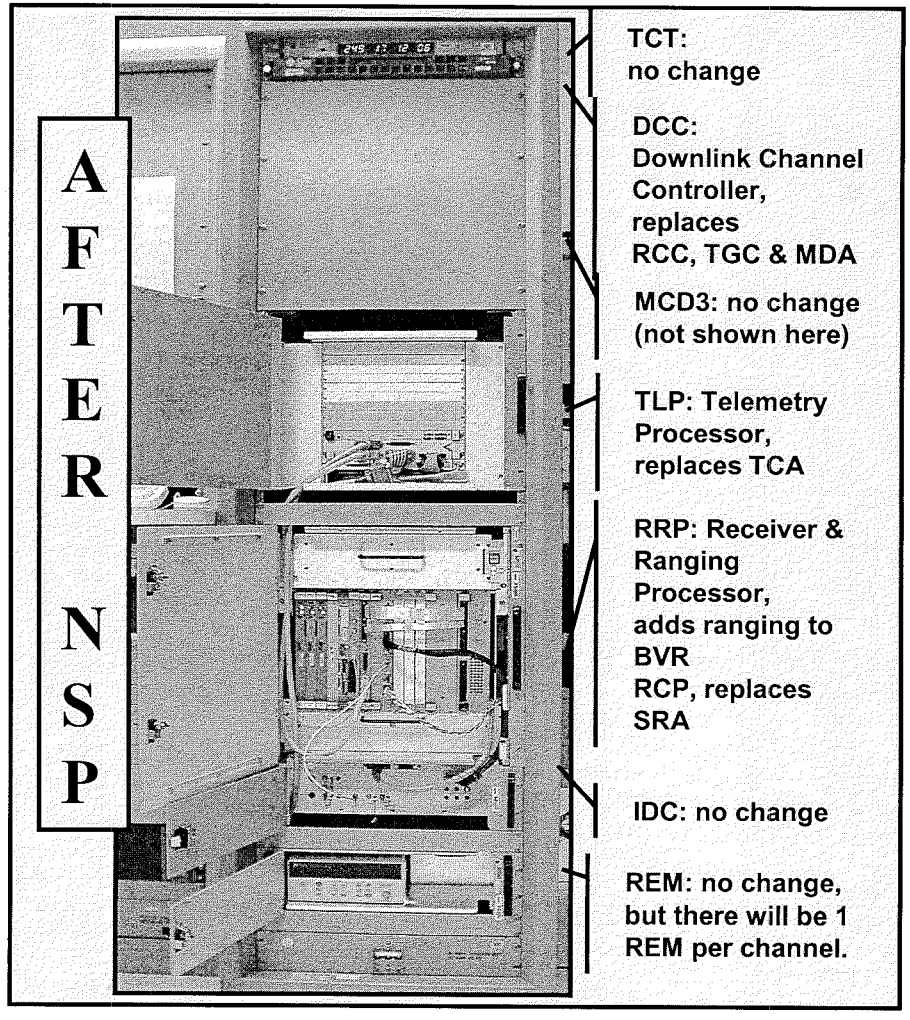

NSP Consolidation of TT&C Equipment Racks

Legacy ===> NSP Rack Configurations

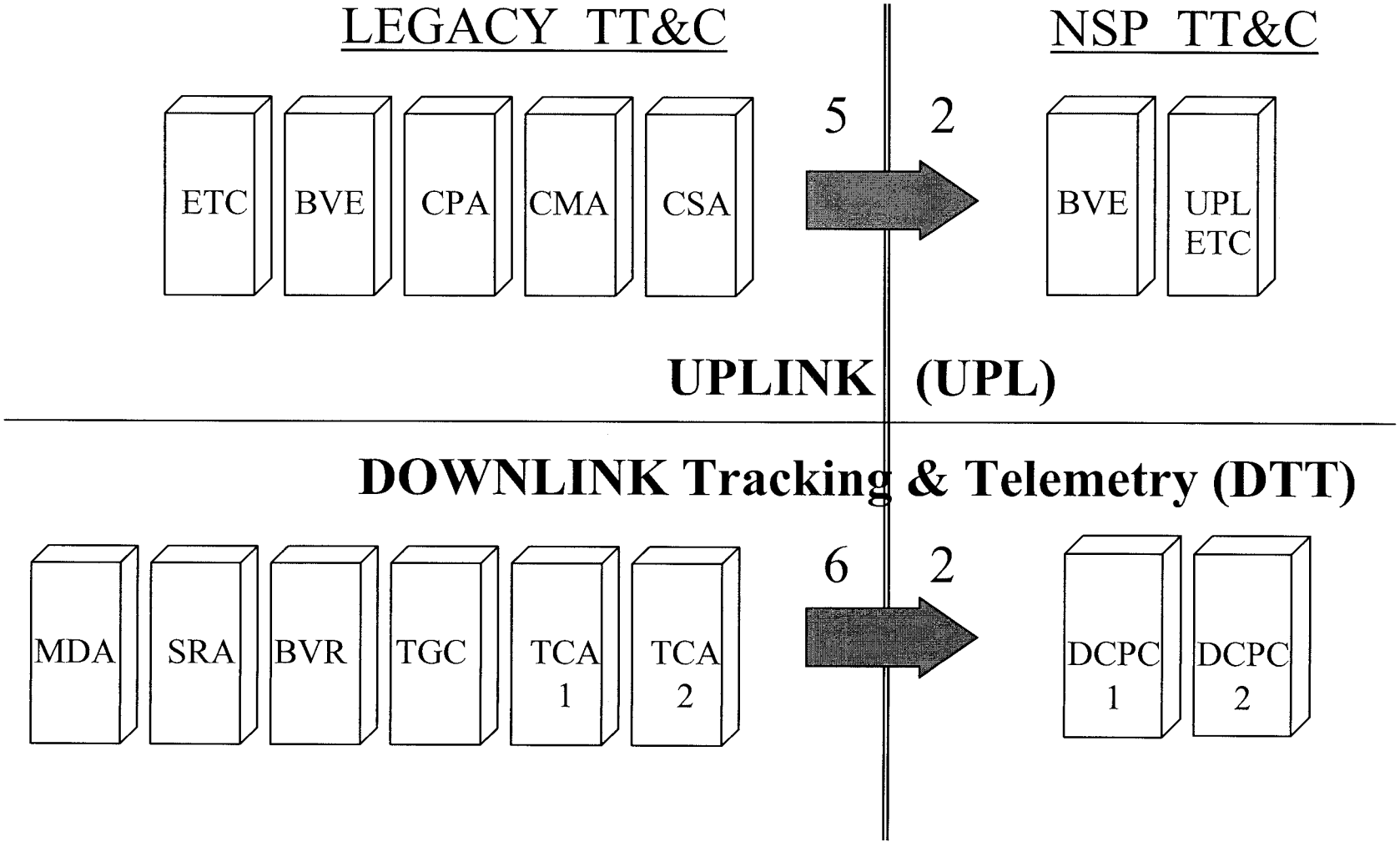

NSP Major Milestones

Preliminary Design Review	**1999**
Critical Design Review	**2000**
NSP (Uplink only) Phase 1 Delivery:	
• **Uplink (UPL) Subsystem** (Command replacement, SLE CLTU Services)	**2001**
NSP (UPL, DTT) Phase 2 Delivery:	
• **Hardware Ship Review**	**September 2002**
• **UPL/DTT Software Delivery Review**	**December 2002**
NSP Operational Deployment:	
• **NSP UPL/DTT Station Installation**	**Nov 2002 - May 2003**
NSP (UPL, DTT) Phase 3 Delivery:	
• **NSP D-4 Software Update Delivery Review**	**September 2003**
• **NSP D-5 Delivery Review**	**November 2004**

NSP DSN Delivery Metrics

DSN TT&C (UPL/DTT) Subsystem Software

- **About 2 Million lines of new code (UPL ~ 700 KLOC, DTT ~ 1.3 KLOC)**

DSN TT&C Hardware

- **60 racks of new UPL and DTT Hardware delivered on schedule**
  - Removed over 110 racks of obsolete equipment
  - COTS products and vendor-supplied telemetry and command assemblies
- **Over 7000 pages of technical documentation**
  - 25 DSN custom interface specifications were decommitted

Operational Deployment (Madrid, Canberra, Goldstone, Pasadena)

- **NSP training on site, with state-of-the-art training materials**
  - 220 DSN engineers/operators trained
  - 20 Hours of Training materials, on-line as voice-clipped slides
- **Downlink hardware installation from Nov 2002 through May 2003, antenna-by-antenna transition**
  - 14 site installations with ~30 days downtime per antenna, spread over 7 months
  - Legacy vs NSP TT&C operate in parallel at different antennas

Pre-NSP and Post-NSP Antenna-by-Antenna Transition

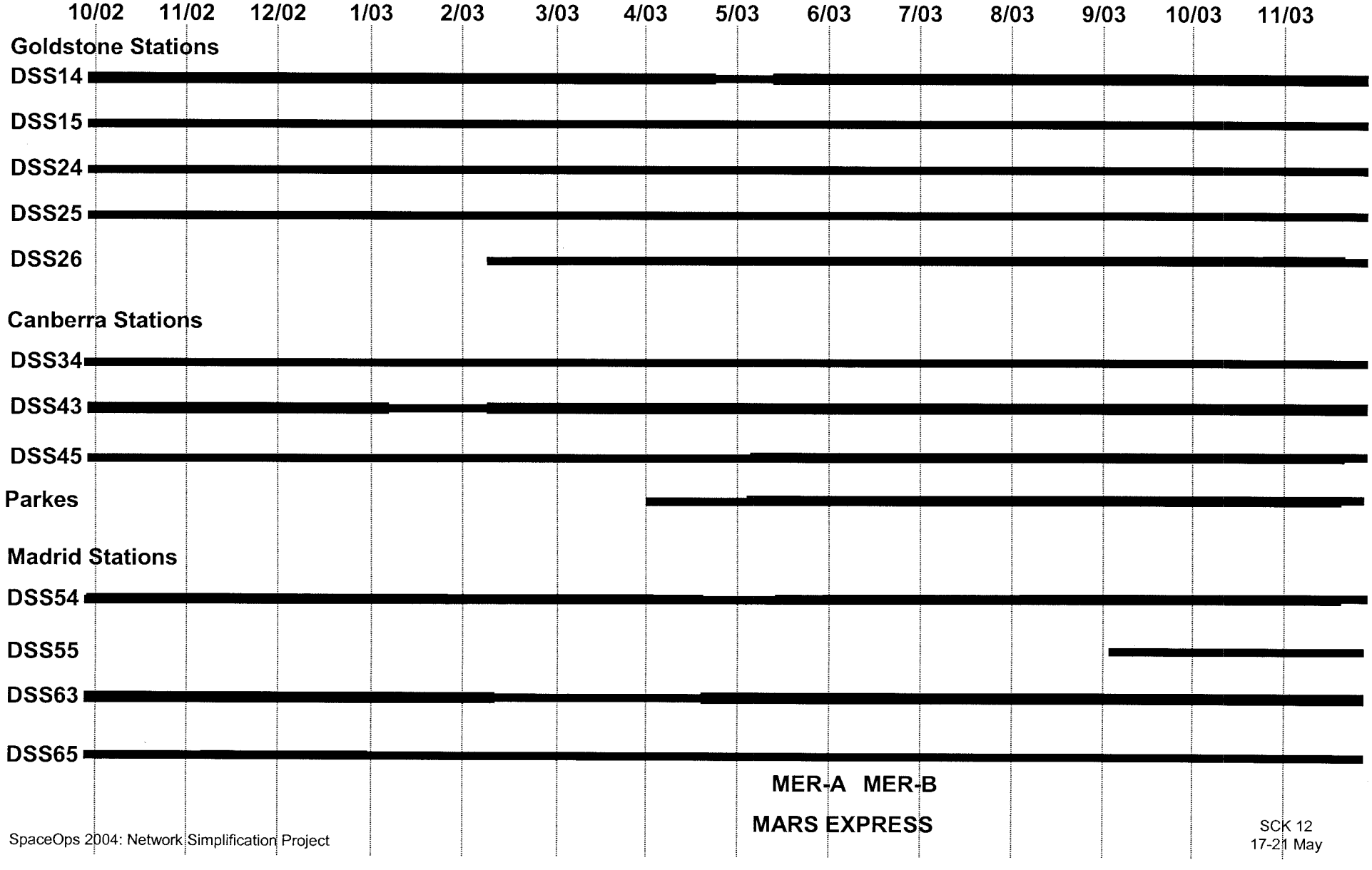

What improves for the missions?

- **More reliable, available, and maintainable TT&C Subsystem Equipment**
  - Consolidated controllers enable interdependent responses and automation
  - 'Multiple Spacecraft per Antenna' capability added for resource efficiency
- **New Tracking Data Product TRK-2-34**
  - Real-time validation and web-based tracking data displays for navigators
  - New tracking data products formatted as SFDUs (vs bit packed formats)
  - Supports future Regenerative and PN Ranging
- **New Command Processing Capabilities**
  - Ka Band Uplink Support
  - CCSDS SLE CLTU Data Transfer Services
- **New Telemetry Processing Capabilities**
  - High Rate Telemetry Data Processing
  - New Turbo Decoder Capabilities
- **New Receiver Functions**
  - Beacon Tone Processing, KaBand Monopulse
  - New IF switch allows sharing of downlink resources and enhanced failover
- **New DSN Monitor Data Format (0158-MON) for missions**
  - Replaces old inflexible, bit-packed monitor data formats

NSP Implementation and Deployment:

Lessons Learned

NSP Lessons Learned: What went wrong

- **Schedule problems arose due to late request to accelerate delivery by six months (due to Mars mission launch dates)**
  - Other DSN tasks were accelerated at the same time, creating conflicting test needs and installation constraints
  - Some equipment only available at operational station; had to coordinate activities around mission operations
  - Impossible to find experienced talent quickly, so development team was consistently under-staffed and often very stressed

- **Schedule change forced delays in replacement of some legacy components until later deliveries**
  - Had to re-design with legacy components alongside new replacements; legacy components remaining were most problematic

- **CCSDS completed specification of SLE CLTU Services after Project CDR, forcing redesign of command system late in development cycle**

- **Installations had to be performed while DSN was still supporting mission operations in parallel**
  - Forced a complex antenna-by-antenna transition plan, with up to 3 installations occurring in parallel at sites across the world
  - Needed to maintain legacy interfaces and formats at same time
  - Missions used multiple stations for DSN support; during transition had to accept data in different formats

NSP Implementation Lessons Learned: Teamwork from Cradle-to-Grave

- **Large-Scale Project emphasized teamwork and user involvement throughout**
  - Over 100 developers, system engineers, I&T engineers, maintenance and operations engineers working together over 5 years (1998 - 2004)
  - Included 4 major tasks and 3 major outsource contracts for selected assemblies

- **Large projects attract top technical talent**
  - Top engineers like to work on large complex projects with significant challenges, large scope, interesting design work, new technologies, and the opportunity to make a big difference

- **Extended the NSP "Project Team" to include the customer**
  - Recruited DSN operators and maintenance engineers to become a truly integrated part of the NSP implementation team
    - Worked side-by-side with JPL engineers, wrote requirements, designed hardware and software, and generated test plans and procedures
    - Enabled us to stabilize requirements early on and gain acceptance of performance trades that we had to make due to accelerated schedule
    - When we delivered in the field, we had product advocates and experienced experts on site to help ease the transition
  - Navigation and project GDS engineers also became integrated team members and implemented upgrades on their side

- **Project-level "Big Hat" System Engineer managed all interfaces & dependencies**
  - Essential for one SE to be responsible across all tasks

NSP Project Management Lessons Learned: It's all about the people

- **Individual tasks, each with a project element manager, called for close coordination and consensus management at a project level**
  - Insisted on same processes and shared development environment across tasks
  - Task managers met weekly, as a team to resolve issues, review plans, set policy

- **Flat organization approach facilitated decision making and culture of trust**
  - Task level decisions were made at own level
  - Team members encouraged to work across tasks, speak directly to each other, and be responsible for success of entire project (not just the task delivery)
  - Hands-on task managers, also held dual role of system engineer
  - However, lack of co-location and different line organizations for team members sometimes got in the way of close working relations

- **Held project-level all-hands meetings and reviews to ensure extended team was focused on same objectives and understood constraints**
  - Process is not enough; having the same end goal is needed to get there!

- **Rewarded teamwork along with individual accomplishments throughout**
  - Ensured accomplishments were visible to JPL and contractor management; good work translated into team and individual bonus awards and NASA recognitions

NSP Implementation Lessons Learned: Life Cycle Strategies and Tools

- **Numerous face-to-face meetings and technical interchanges between developers, managers, users, and mission stakeholders**
  - Customers knew what was coming and the potential impact on them
  - Many technical peer reviews, included external experts, users, and stakeholders
  - Held many project briefings and planning meetings throughout
- **Outsource contractors were treated as "partners" with win-win approach**
  - JPL shared skills and source code as necessary to ensure contractor success
  - Outsourced only requirements that made sense (i.e., not DSN-unique or non-standard) to ensure contractor could benefit from an improved product line
- **Risk Mitigation Strategies**
  - Incremental Deliveries reduced risk and enabled early deployment of essential new services (e.g., SLE CLTU services to support ESA missions)
  - Managed scope by ensuring subsystem requirements were documented, traceable, and testable; operability requirements came later
- **Strong CM organizational structures with full life cycle approach**
  - Automated configuration control tools with integrated anomaly tracking system, rapid response build and delivery process
  - Enabled efficient redelivery of entire system to fix a few critical problems
  - Enabled innovative metrics generation, to manage risk and predict progress
  - But developers were frustrated when mandated engineering processes/policies changed over the life of the project; hired additional staff to accommodate
- **Everything was put on web site, from design notes to draft documents to plans**

NSP Deployment Lessons Learned: Managing at a System Level

- **Separate budget and project-level manager for I&T, Ops Transition, Training**
  - Allowed development team to focus on implementation
  - Ensured test team was involved in early engineering phases
  - Avoided usual tendency to take training as an after thought

- **NSP transition went remarkably smooth considering the complexity and scope of software and hardware changes**
  - Required extensive mission verification testing and approval (over 40 missions)
  - Extended missions lacked resources to respond in many cases
  - Complex installation and deployment required that one station at a time be transitioned to the new equipment

- **Availability of a "real testbed" was lifesaver**
  - Cassini project's willingness to allow testing with spacecraft
  - New antenna at Goldstone was set aside as testbed during NSP I&T

- **NSP was an "all or nothing" installation which created potential high risk to customer support**
  - Additional stress network-wide (due to unprecedented Mars activities) led to some people not wanting to approve the delivery, even weeks before installation
  - In the end, the project (and product) exceeded expectations and has successfully supported missions for critical operations for over a year

Conclusions

- **It Worked!**
  - NSP TT&C system has been operational since January 2003
    - Software update in September addressed critical problems
    - Successfully supported 4 deep space launches and Mars landings

- **Why it worked:**
  - Teamwork, at task level and at project level
  - Customers working as part of implementation team
  - Close communication with mission stakeholders
  - Attracting exceptional technical talent and rewarding good work
  - System-level engineering, strong configuration management, metrics
  - Availability of "real testbed" and cooperative flight projects

  - **However**, accelerating the schedule caused under-staffed teams, forced redesign and reuse of some legacy components, and resulted in complex transition plan