Why Europa?

Europa is the single highest-priority target for future flagship-class missions to the outer solar system.

Reference: Solar System Exploration Decadal Survey (National Research Council)

Why Land on Europa?

Because *life* may exist within Europa's icy crust or in a subsurface ocean.

Mission Goals

- To land on the surface Europa to take in-situ measurements for a minimum of 30 Earth days (8.5 Europa days).
- Measurements to include surface imagery, spectroscopy, seismometry, radiation and temperature trending.

Science Objectives

- To search for signatures of biological activity.
- To assess the chemical and physical habitability.
- To measure Europa's seismicity to understand the interior structure and crustal dynamics.
- Provide "ground truth" for remote measurements.
- To obtain close-up images of Europa surface features and geology.

Key Performance Values

- Power:
  - 4.5 We (avg) / 17.8 We (Max)
  - RPS Power Output: 10.1 We (EOM)
- Mass
  - Lander Mass: 38.7 kg
  - Total S/C Mass: 232.7 kg
- Telecom
  - 1.4 Mbits/s (Max data rate)
  - 1.4 Gbits (Data storage)

Potential Instrument Suite

- Imager
- Microseismometer
- Raman Spectrometer
- Laser-Induced Breakdown Spectroscopy
- Temperature Sensors
- Radiation Sensors

This information is pre-decisional and for discussion purposes only.

Mission Architecture Overview

- The Europa Lander Mission (ELM) is derived from the Europa Pathfinder (EPF) study and takes advantage of RPS technology to enable a 30 day surface mission (EPF baseline was battery-limited at 3.5 days).
- ELM is assumed to ride as a payload on the proposed Jupiter Icy Moons Orbiter (JIMO) or on a separate Europa Orbiter mothership.
- The mothership would act as the communication relay between ELM and Earth.
- The ELM landing site would be selected to maximize science returns and minimize landing risk.
- The landing site could be updated in-flight if the mothership identified higher-priority landing areas during Europa approach.

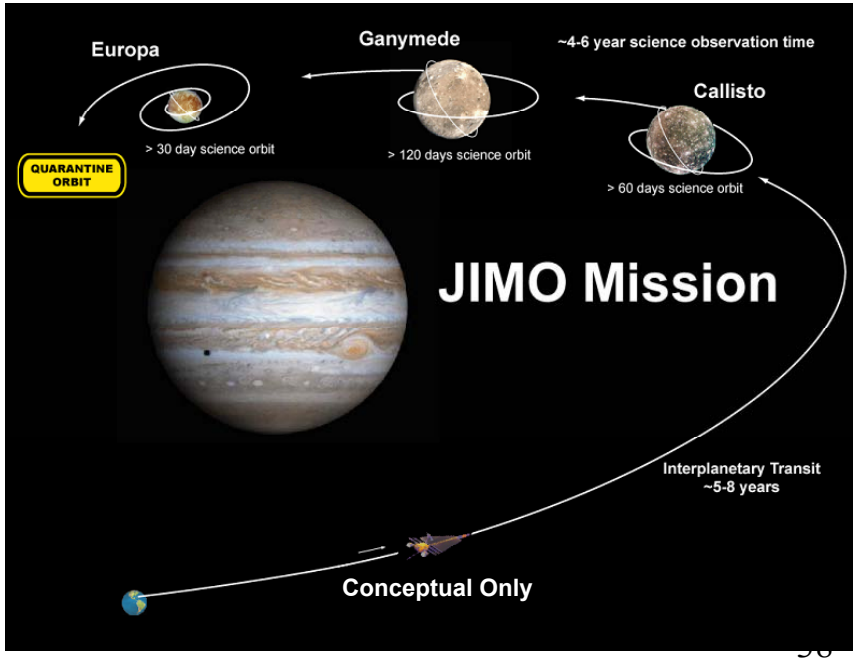

ELM Mounting to Mother Spacecraft

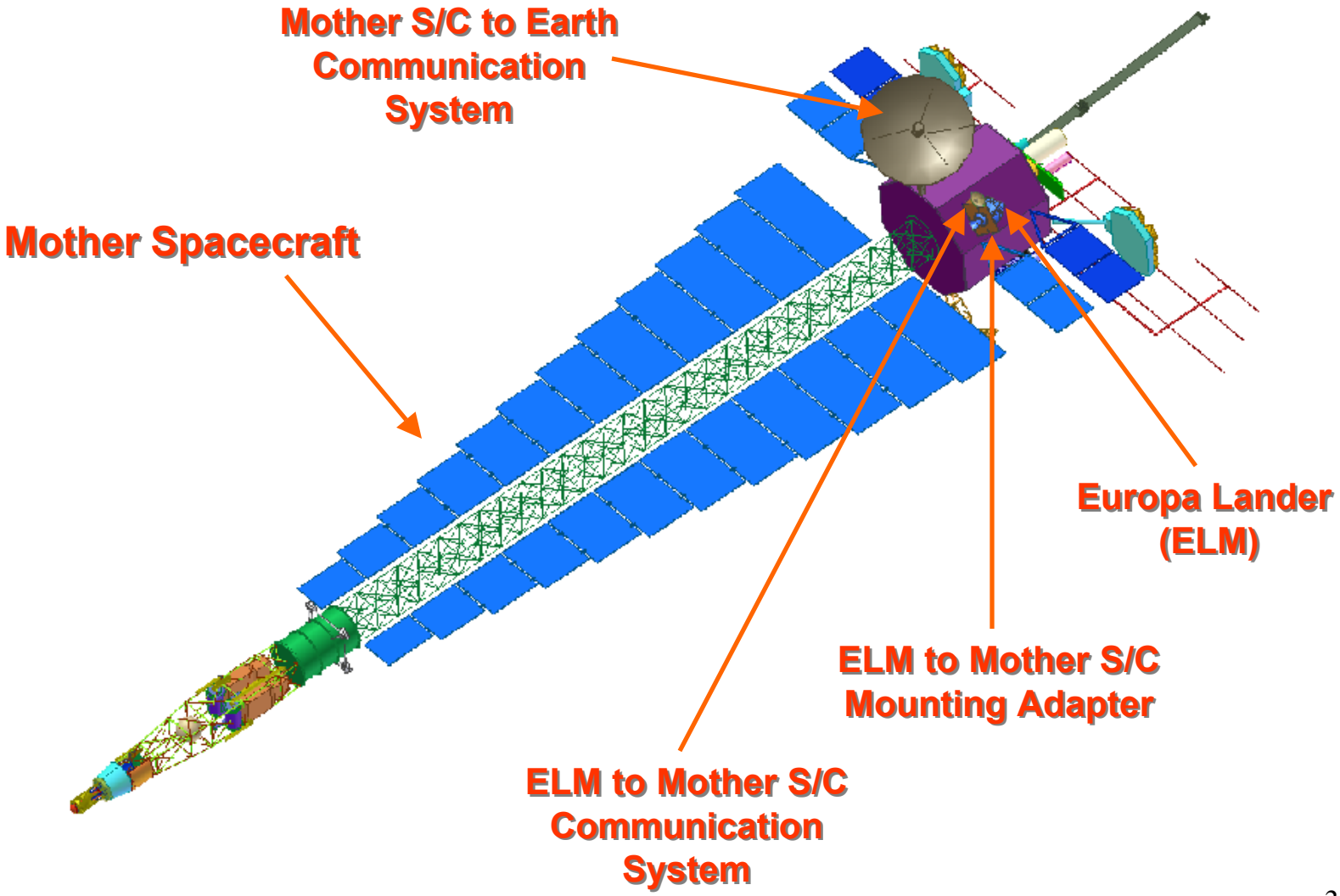

Conceptual Only

This information is pre-decisional and for discussion purposes only.

Radioisotope Power Systems and Mission

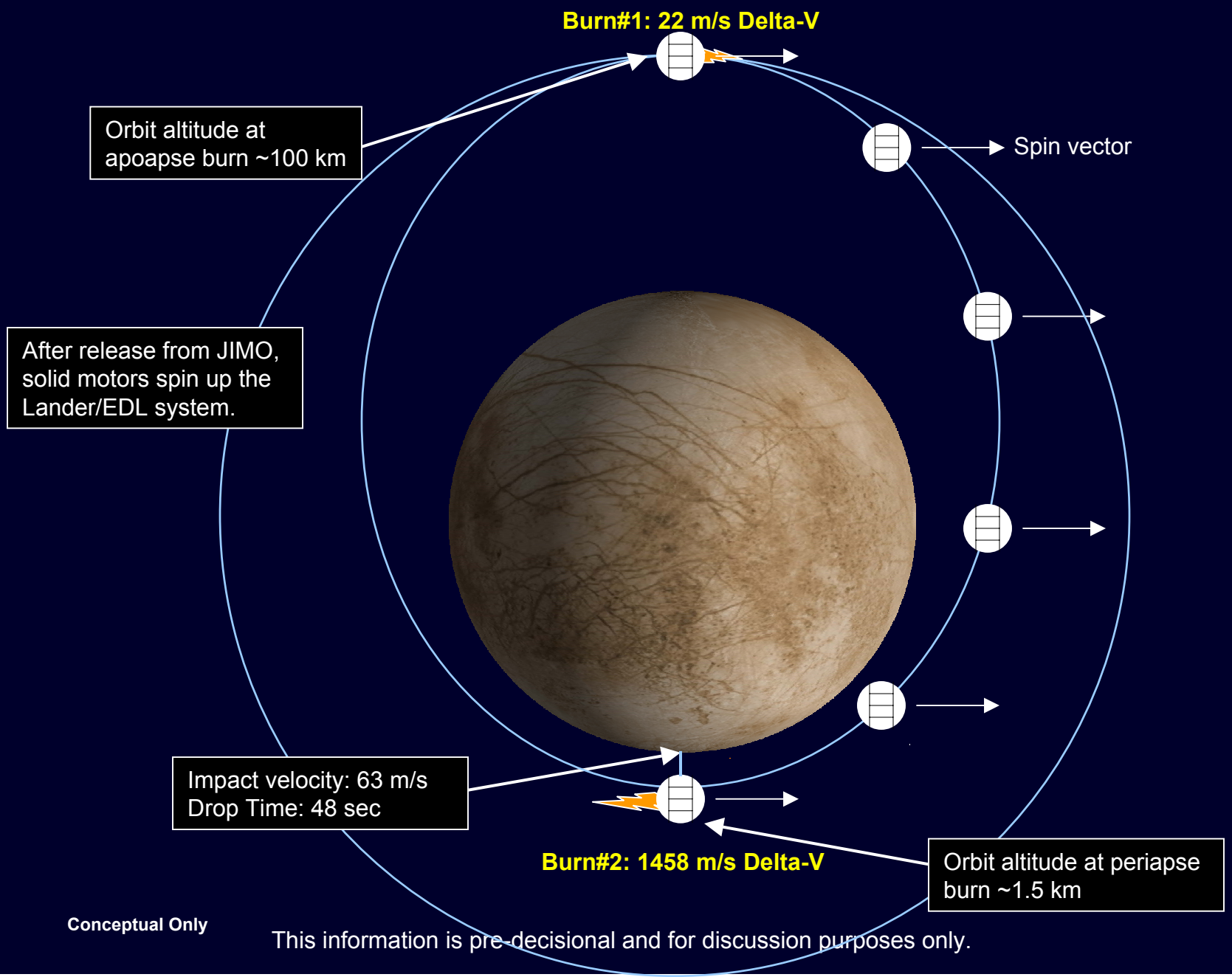

Conceptual Only

This information is pre-decisional and for discussion purposes only.

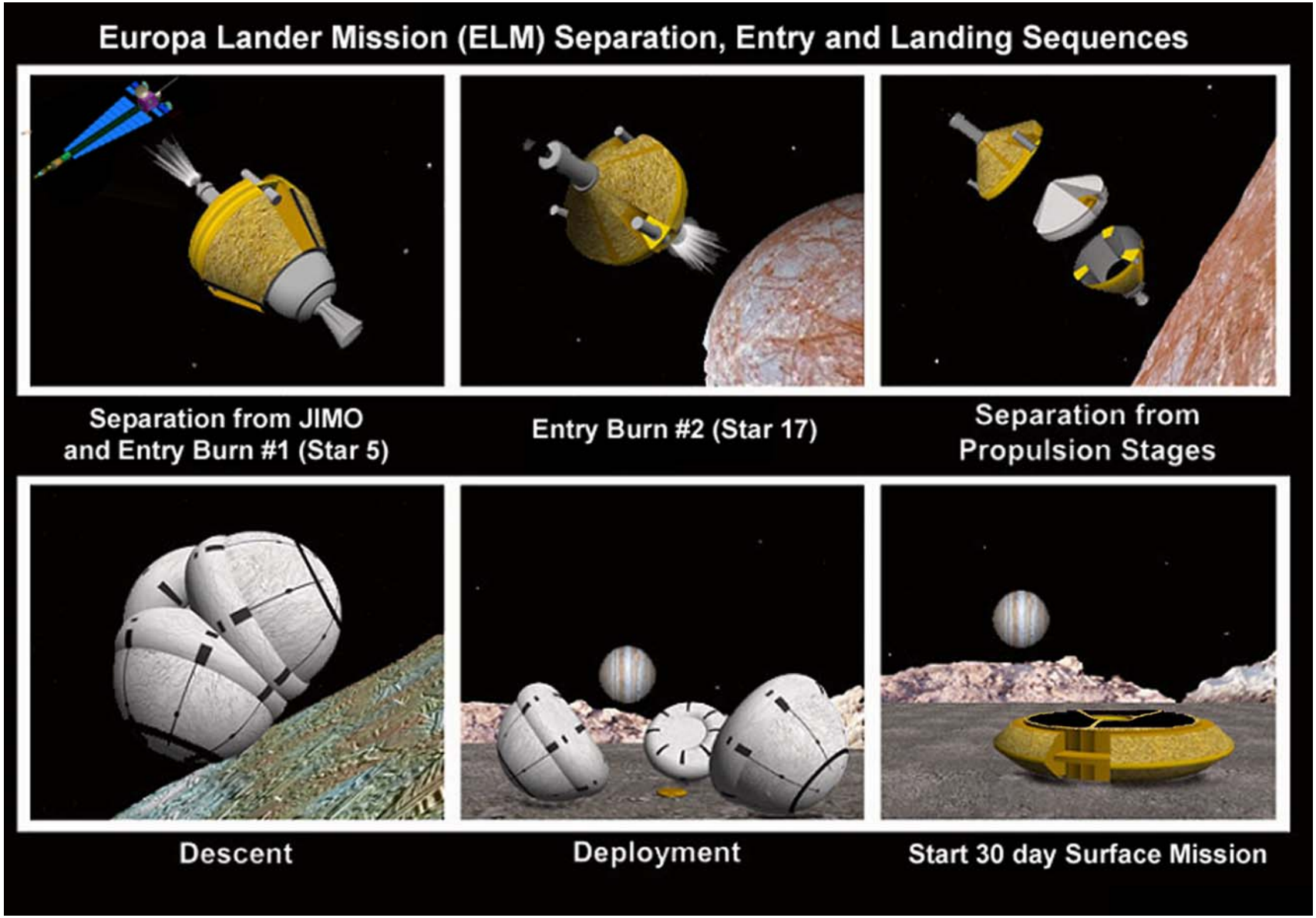

Conceptual Only

This information is pre-decisional and for discussion purposes only.

Small RPS Characteristics

- One GPHS module using a 5% efficient thermoelectric (TE) converter is assumed to provide 250 Wt (thermal) /12.5 We (electric) at BOM.
- Assume Pu283 decay decreases thermal power output by 0.8%/year.
- Assume TE decay decreases electrical power by another 0.8%/year.
- The End-of-Mission power output after 13 years is calculated at 225 Wt / 10.1 We.
- Medium temperature TEs (e.g., PbTe/TAGS) are assumed in baseline design for conservatism.
- The RPS is assumed capable of surviving high S/C acceleration loads (max of 600 g) associated with the ELM landing system.
- The RPS is packaging is a short cylinder with the TEs arranged radially (i.e., TE cold shoes / heat rejection is via the sides).

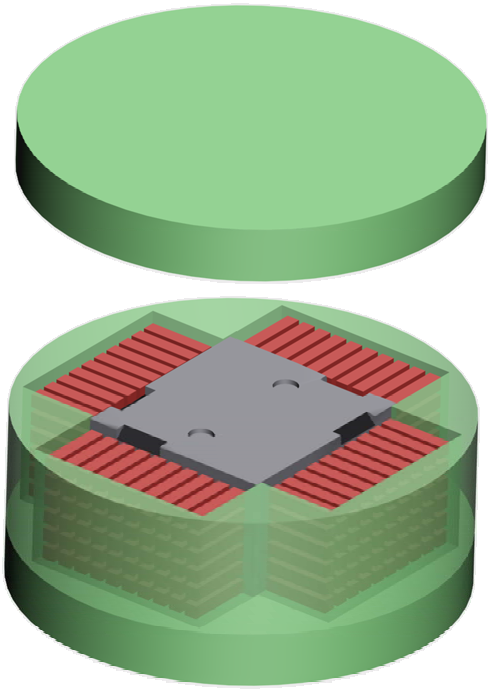

This information is pre-decisional and for discussion purposes only.

Conceptual Only

RPS Installation and Orientation within ELM

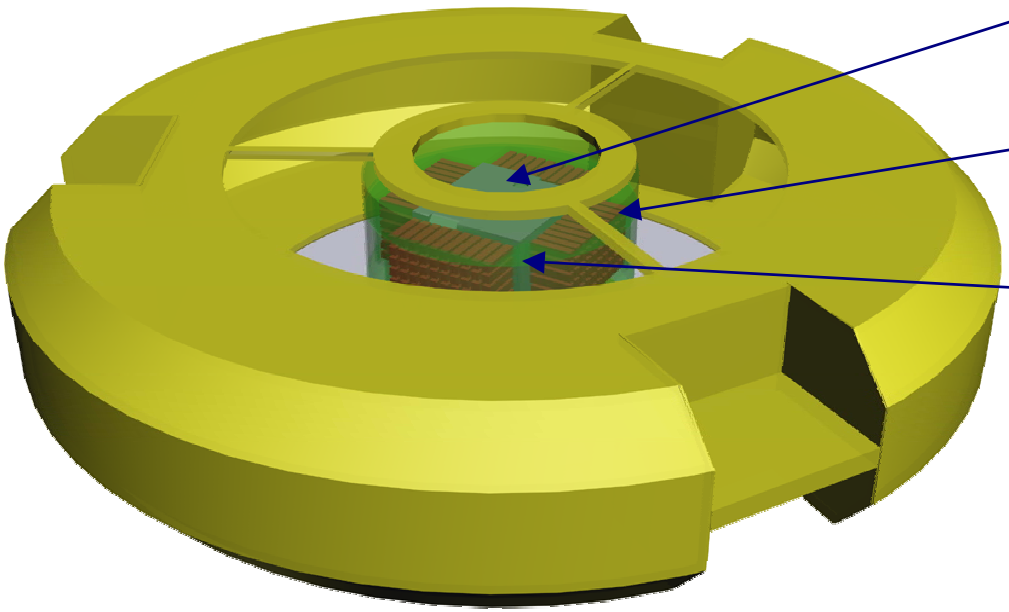

Conceptual Only

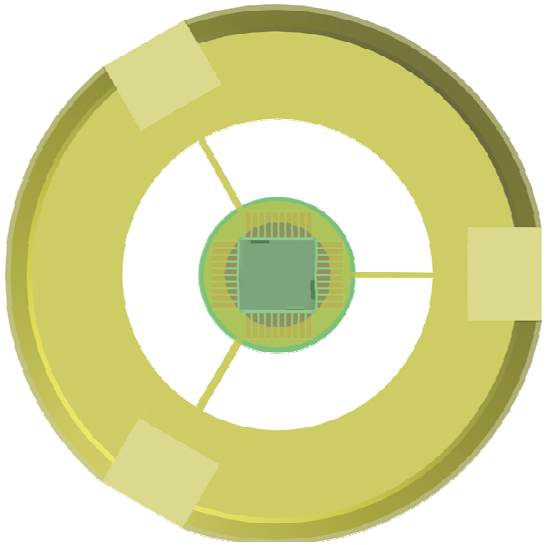

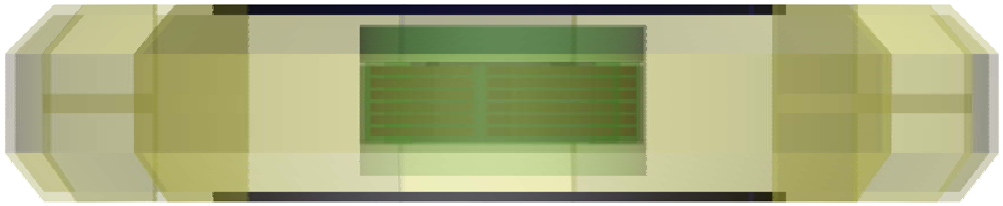

Note: Radiator panels, antennas and internal subsystems (other than RPS) not shown.

This information is pre-decisional and for discussion purposes only.

Power Levels for Each Operating Mode

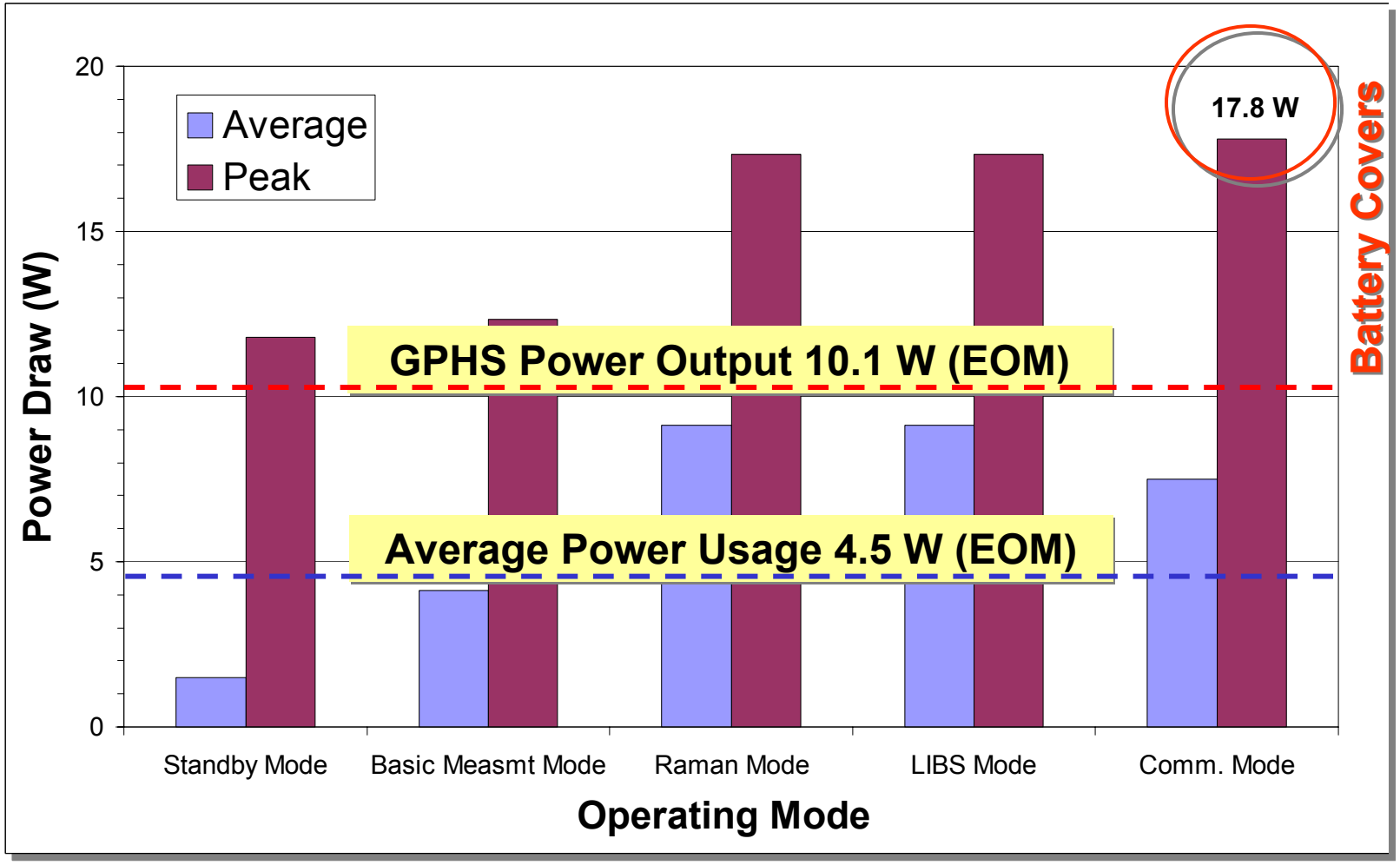

Battery Covers Peak Loads

This information is pre-decisional and for discussion purposes only.

Conclusions of the Europa Lander Mission Study

- The Europa Lander Mission would be enabled by a small-RPS power system.
  - Solar insolation at Jupiter (~5 AU) is ~ 3.7% that of Earth, making a solar-powered lander impractical.
  - The surface of Europa is extremely cold (average of 103K, or –275°F), requiring significant heating power to maintain operating temperatures.
    - Excess RPS heat could be used to provide temperature control with minimal (or no) use of electrical heaters.
  - Photovoltaics would be adversely affected by the intense radiation environment of Europa. A small-RPS could potentially be designed to withstand the high radiation doses.
- Higher-efficiency power converters (e.g., Stirling, advanced RTG) could further optimize the ELM power system:
  - Could eliminate the need for the Li-Ion battery.
  - Could reduce the required amount of Pu238 fuel.

This information is pre-decisional and for discussion purposes only.

An Adjunct Galilean Satellite Orbiter (GSO) Using a Small Radioisotope Power Source

Radioisotope Power Systems and Mission

Mission Goals

- The Galilean Satellite Orbiter (GSO) would be a small adjunct spacecraft that would orbit one or more of the Galilean Satellites to measure the local magnetospheric characteristics of these moons.
- GSO would also measure the interaction between these moons and Jupiter's magnetosphere, perform surface imaging, and measure each moon's gravity field characteristics.

Science Objectives

- Detect evidence of subsurface water.
- Determine satellite interaction with Jovian magnetosphere.
- Determine local radiation environment.
- Quantify satellite magnetosphere.
- Identify plasma/particle interactions.
- Determine variations in magnetic fields.
- Map gravity field.
- Monitor global surface processes.

Key Performance Values

- Power:
  - 6.1 We (Min) / 26 We (Max)
  - RPS Power Output: 10.1 We (EOM)
  - Requires 33 W-hr Li-Ion battery
- Mass
  - GSO spacecraft mass: 70.8 kg
- Telecom
  - 5 kbits/s (Downlink Rate)

Potential Instrument Suite

- Magnetometer
- Plasma spectrometer
- Plasma Wave Detector
- Charged Particle Detector
- Imager
- Doppler Extractor

This information is pre-decisional and for discussion purposes only.

CONCEPTUAL GSO SPACECRAFT CONFIGURATION

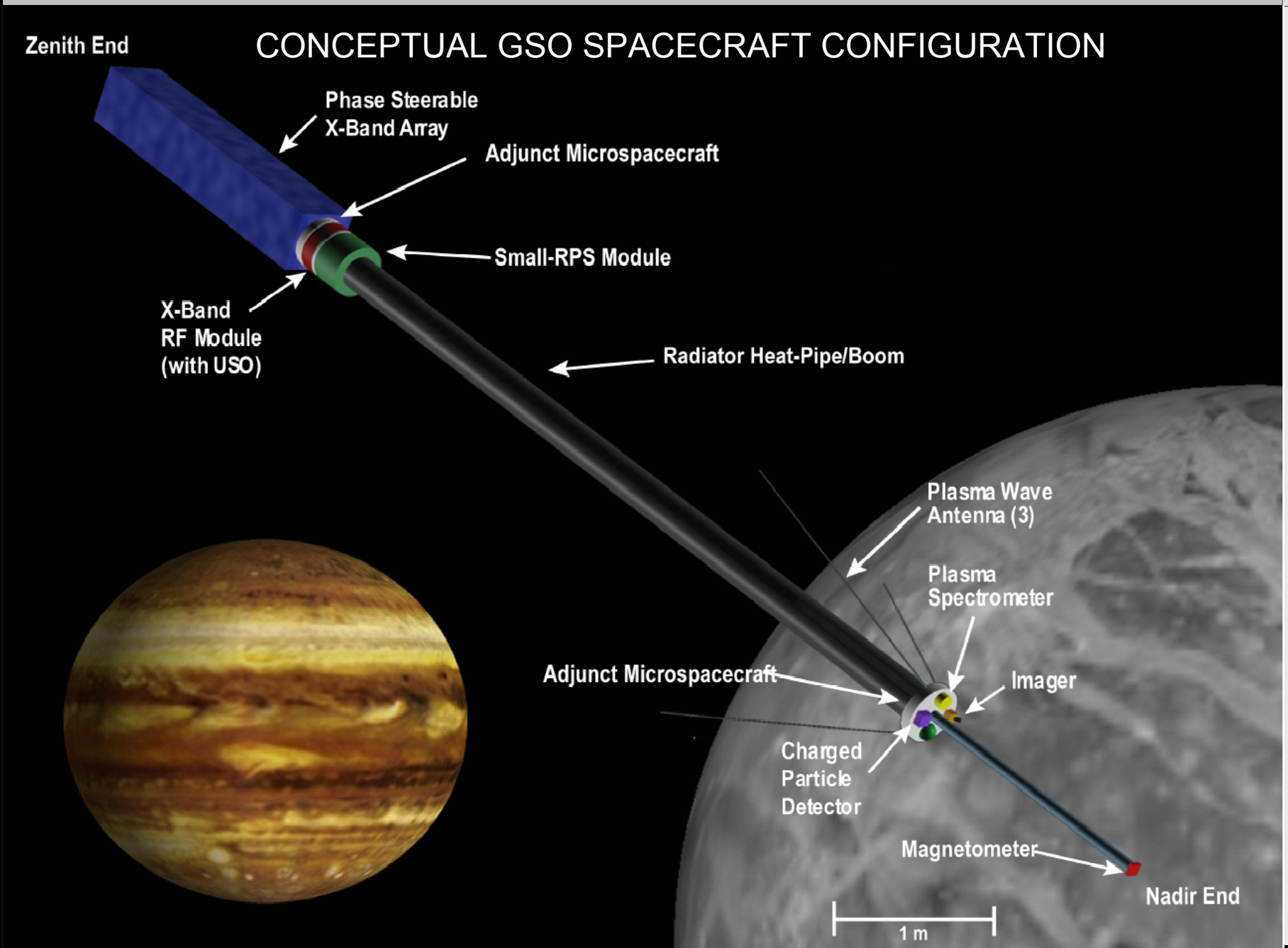

NOTIONAL JIMO SPACECRAFT CONFIGURATION WITH GSOs

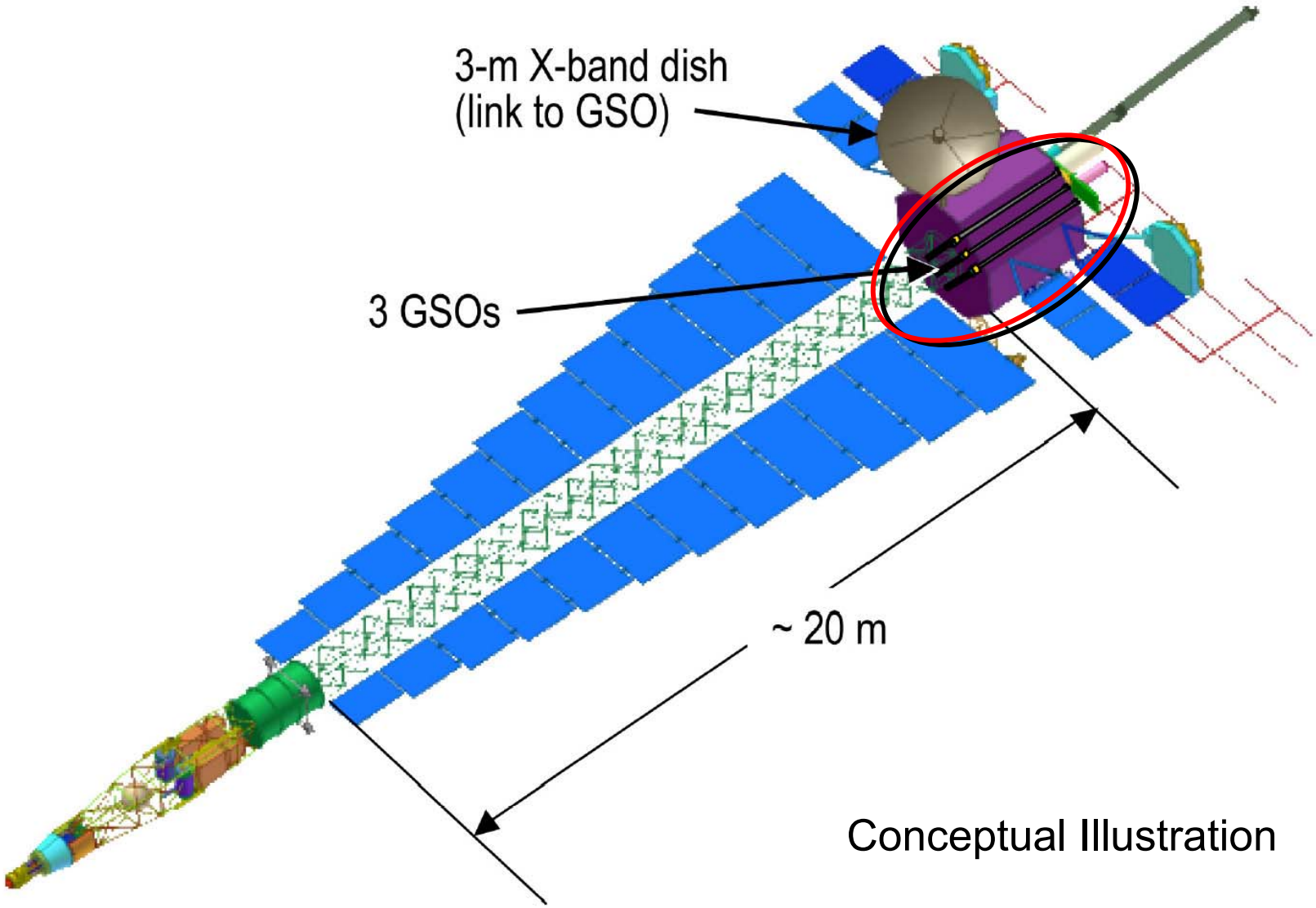

Conceptual Illustration

This information is pre-decisional and for discussion purposes only.

SMALL RPS CONFIGURATION - CONCEPTUAL

- RPS based on a single GPHS module with thermal output of 250 W (BOM)
- Assumes a conversion efficiency of 7% at BOM.
- Power output: ~ 14 We at EOM (13 yrs)
- Small RPS mass estimated at ~5 kg
- Assumes an end mounted close packed array (CPA) configuration.
  - Facilitates the use of a long-end mounted boom as thermal radiator
- Batteries used to supplement the RPS for peak power loads (telecom)
  - RPS recharges batteries during lower-power operations.

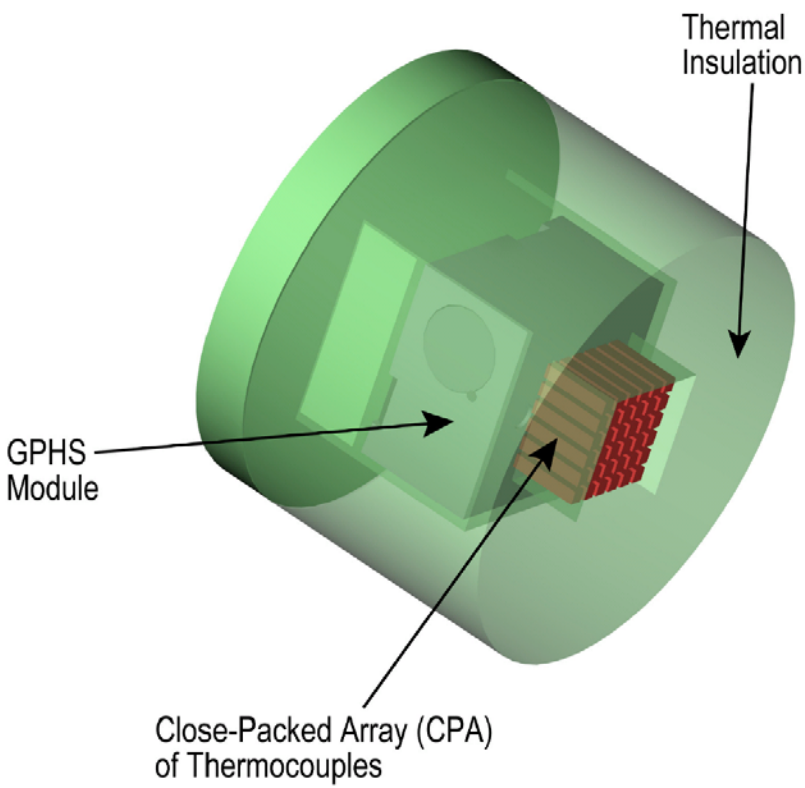

Conceptual Only

This information is pre-decisional and for discussion purposes only.

Conclusions of the GSO Study

- The GSO is a potential new class of low-powered, scientifically-rich spacecraft that could be enabled by small-RPS technology.
- GSO would use a mothership as a delivery vehicle and a telemetry relay to Earth.
  - The GSO would be left behind, allowing the mothership to continue to new destinations.
- The GSO would orbit one or more of the Galilean satellites carrying a fields and particles payload (other payloads could be used).
- The Small-RPS in conjunction with the long boom/radiator allows gravity gradient stabilization (eliminates the need for active attitude control)
- The small-RPS, LCAM, and other advanced GSO technology capabilities could potentially be available in the 2015 time frame to support a Europa Orbiter mission.
- In conclusion, the GSO concept demonstrates the potential for a Small-RPS to enable a rich plasma science mission using a low-power, low-mass S/C

This information is pre-decisional and for discussion purposes only.

A Small RPS-Powered Mars Rover Concept

Conceptual Only

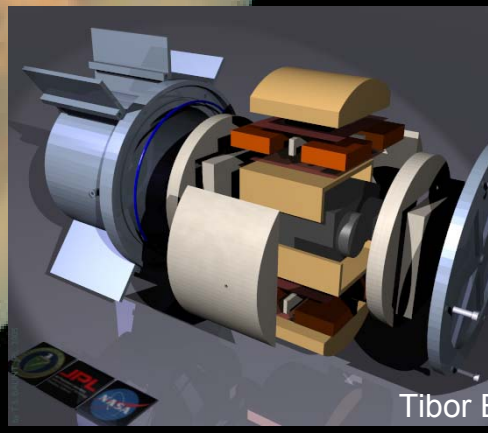

Conceptual Only

Mission Goals

- Conduct high-priority science in-line with the Mars Exploration Program Assessment Group (MEPAG).
- Perform an astrobiology-driven mission in places where solar powered rovers could not go.
- Operate on Mars surface for a minimum of 3 years.

Science Objectives

- Characterize the mineralogy of rocks and soils
- Determine temp. profile, dust/water-ice opacity, and water vapor abundance in lower atmosphere boundary layer.
- Characterize geomorphology of surface including stereo imaging for ranging, terrain, and slope maps.
- Study the fine scale morphology, texture and reflectance of natural surfaces.
- Perform mineral characterization and detection of water and organic/inorganic forms of carbon.

Key Performance Values

Power:

- MER rover produced 600-700 W-hr/sol (EOM)
- Small-RPS Rover designed to operate at a similar energy level (620 W-hr/sol.)
- Required Small RPS output: 23.4 We (EOM)
- Requires 2x8 A-hr Li-Ion batteries.

Mass

- Small-RPS Mars Rover: 180.9 kg
  - MER rover mass is ~180 kg

Potential Instrument Suite

- Mini-Thermal Emission Spectrometer
- Panoramic Camera (PanCam)
- Microscopic Imager
- Mars Microbeam Raman Spectrometer
  - Replaces MER Mossbauer Spectrometer
- Alpha-particle X-Ray Spectrometer
- Rock Abrasion Tool

This information is pre-decisional and for discussion purposes only.

RPS Technology Increases our Ability to Explore Mars

RPS territory for continuous year around operation
(Solar power generation is limited to Northern Summer)

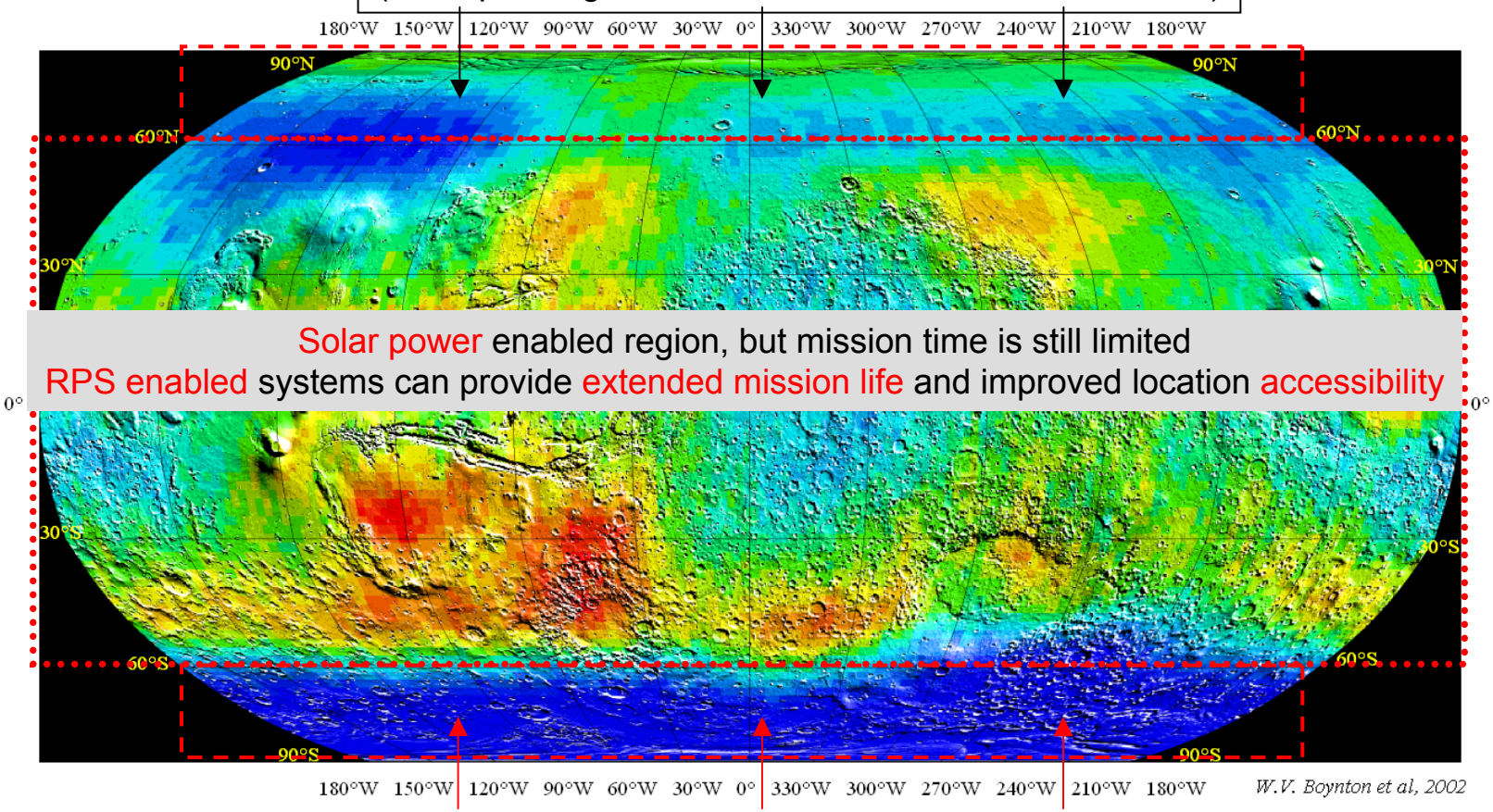

Solar power enabled region, but mission time is still limited
RPS enabled systems can provide extended mission life and improved location accessibility

W.V. Boynton et al, 2002

RPS territory for continuous year around operation
(Solar power generation is limited to Southern Summer)

This information is pre-decisional and for discussion purposes only.

Conceptual Single GPHS Module Based RPS

BOL Power: 12.5We
Conversion eff.: 5%
Mass: ~5 to 6kg

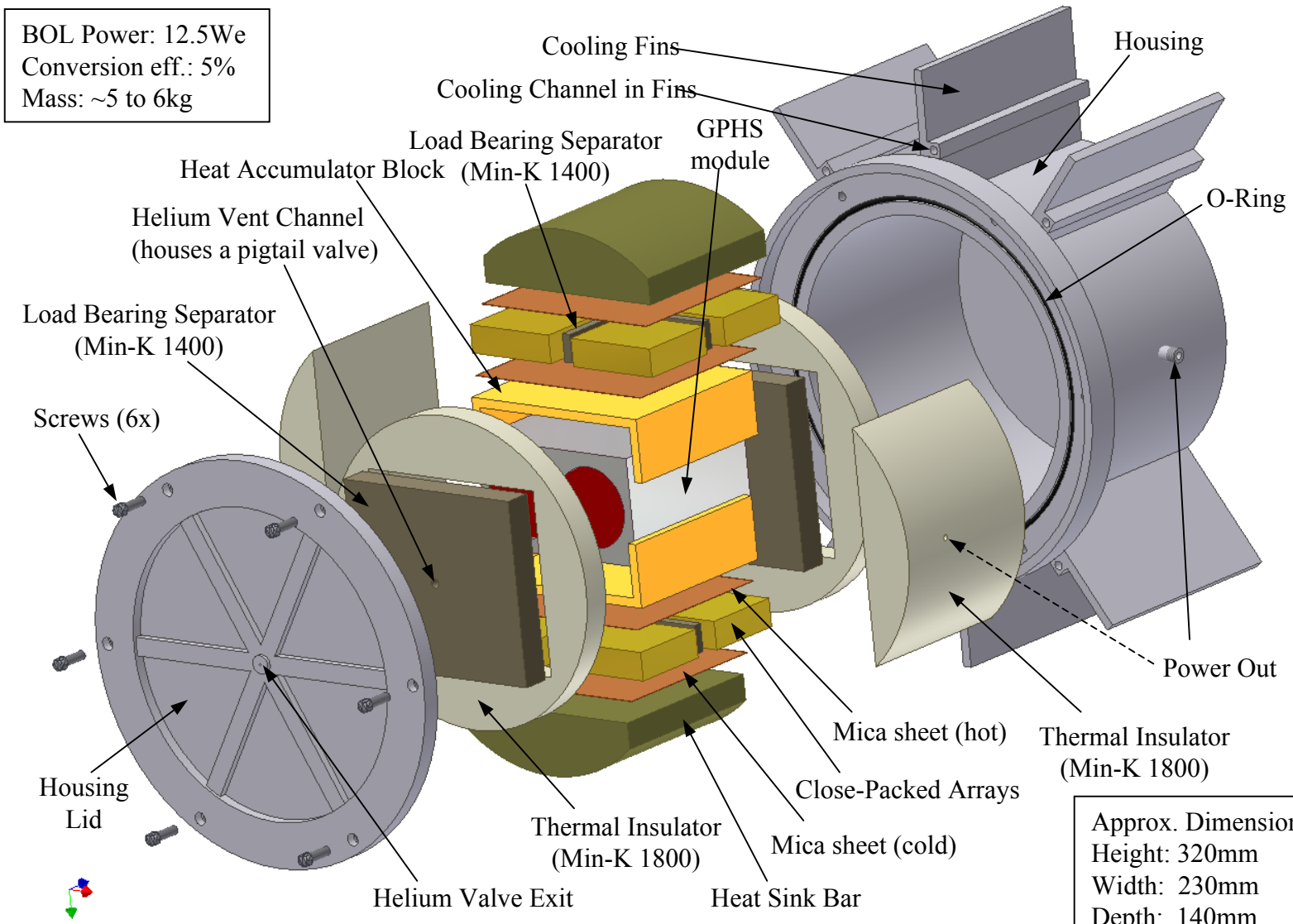

Approx. Dimensions:
Height: 320mm
Width: 230mm
Depth: 140mm

Note: This concept by T.Balint is based on the works of R. Wiley (DoE) & R. Carpenter (OSC)

This information is pre-decisional and for discussion purposes only.

Radioisotope Power Systems and Mission

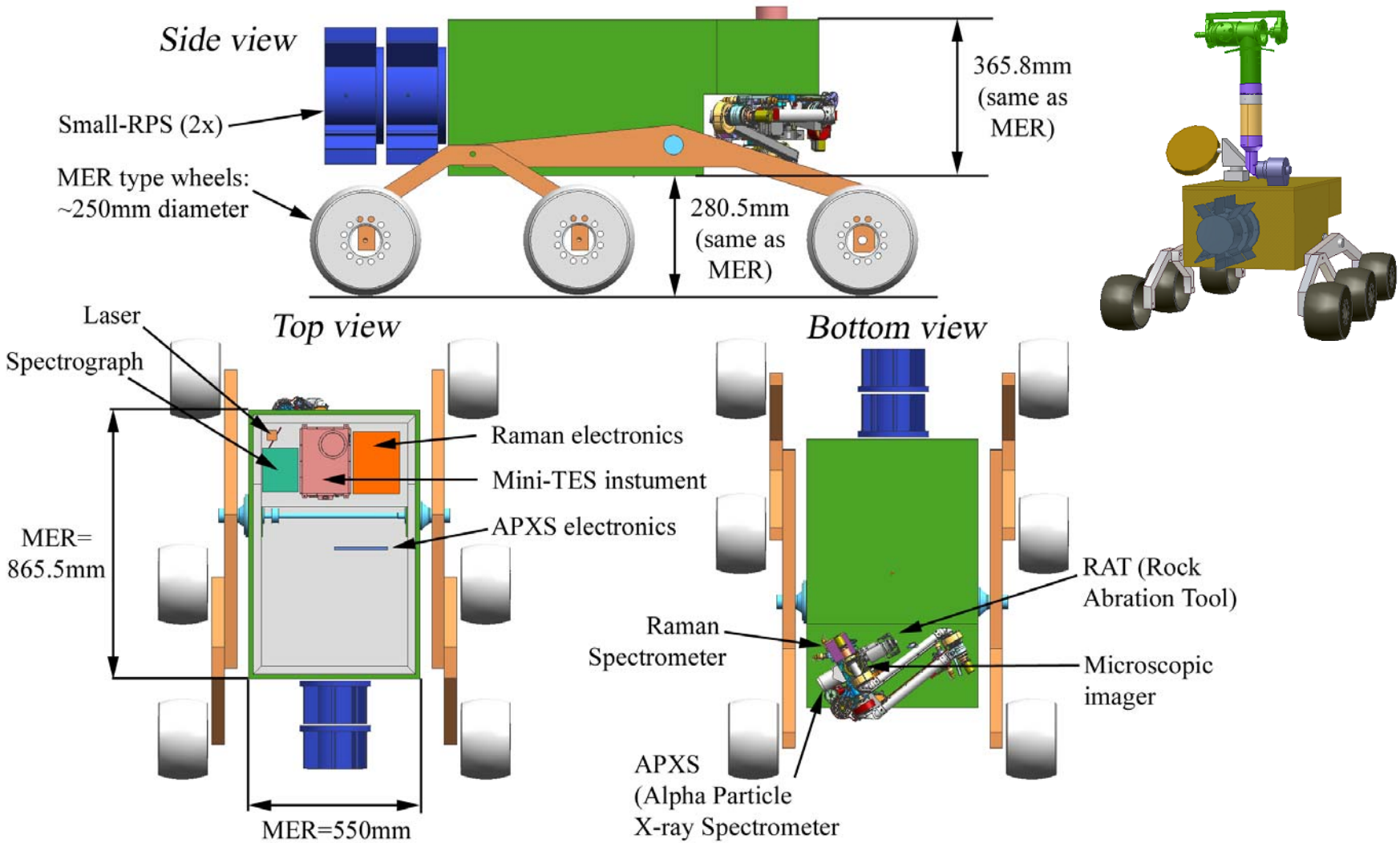

MER class heritage

This information is pre-decisional and for discussion purposes only.

Conclusions of the Small-RPS Mars Rover Study

- The feasibility of a MER-class rover was evaluated using two small-RPSs based on the existing GPHS heat source and thermoelectric conversion.
  - Study conservatively assumed that the two small-RPSs generated 25 We (BOM) and 23.4 We (EOM).
- The highest power usage modes were mobility and telecom. For this reason, a hybrid power system was adopted using RPSs and batteries.
- RPS rovers could surpass solar powered systems in mission duration, location accessibility, and mobility over lifetime. In addition, RPS systems could provide advantages even at locations where solar power is feasible (due to tighter temperature control with excess heat utilization).
- Based on this study, a MER-class rover using two small RPSs could be envisioned for astrobiology targeted missions.

This information is pre-decisional and for discussion purposes only.

Searching for Subsurface Lunar Water Ice Using a Small RPS-Powered Rover

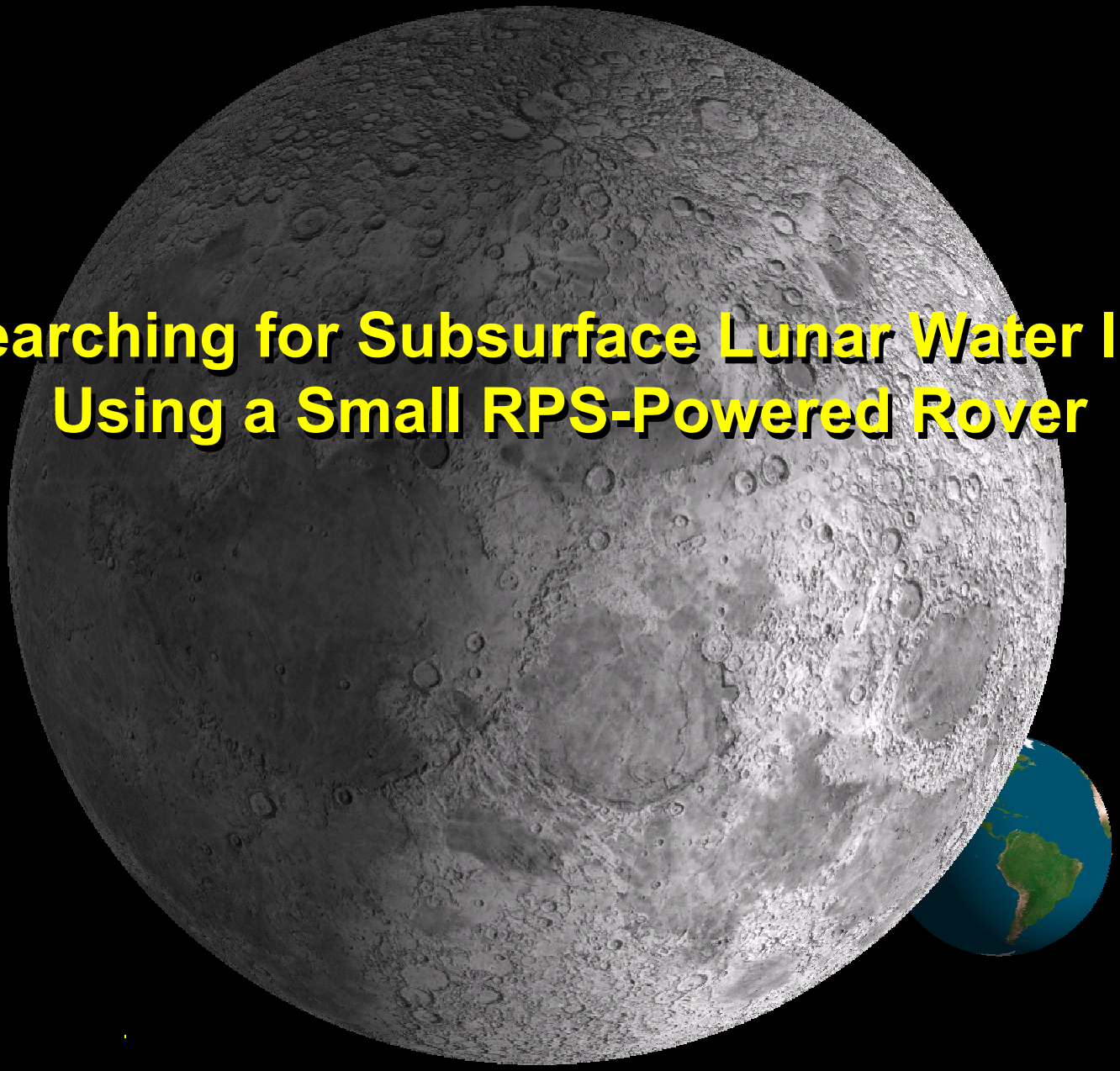

Exploring the Moon will help us determine:

1) Whether water ice exists on or near the surface, possibly enabling long-term human presence.

2) What processes marked the initial stages of planet and satellite formation.

3) How the processes that shaped the contemporary character of planetary bodies operate and interact.

Presidential Vision for Space Exploration **(1)**

Solar System Exploration Decadal Survey (2, 3)
(National Research Council)

Radioisotope Power Systems and Mission

Mission Goals

- Land in the Peary-B crater (North Pole) to search for water ice.
- The nominal mission duration would be 4 yrs.
- The rover would be capable of operating continuously throughout the mission.
- A communications relay satellite would be used –Earth not visible from inside crater.
- The rover would be capable of traversing a minimum of 20 km over the mission lifetime.

Science Objectives

- Assess whether water-ice is present on the surface or sub-surface.
- If water-ice is present, assess its location, quantity and quality.
- Determine what processes marked the initial stages of planet and satellite formation.
- Understand how processes that shaped the contemporary character of planetary bodies operate and interact.

Key Performance Values

Power:

- Would use four Small RPSs: 50 We (BOM)
- Use 17 A-hr Li Ion battery for peak loads.

Mass

- Lunar Rover: 349 kg
- Total Launch Mass: 3957 kg

Potential Instrument Suite

- Panoramic Camera (PanCam)
- Coring Drill
- Ground Penetrating Radar (GPR)
- Gamma Ray / Neutron Spectrometer
- Microscopic Imager
- LIBS-Raman Spectroscope
- Time-of-Flight Mass Spectrometer
- Near Infra Red/Visible Imager

This information is pre-decisional and for discussion purposes only.

Baseline Rover Landing Site – Peary B Crater (89.3°N, 105°E)

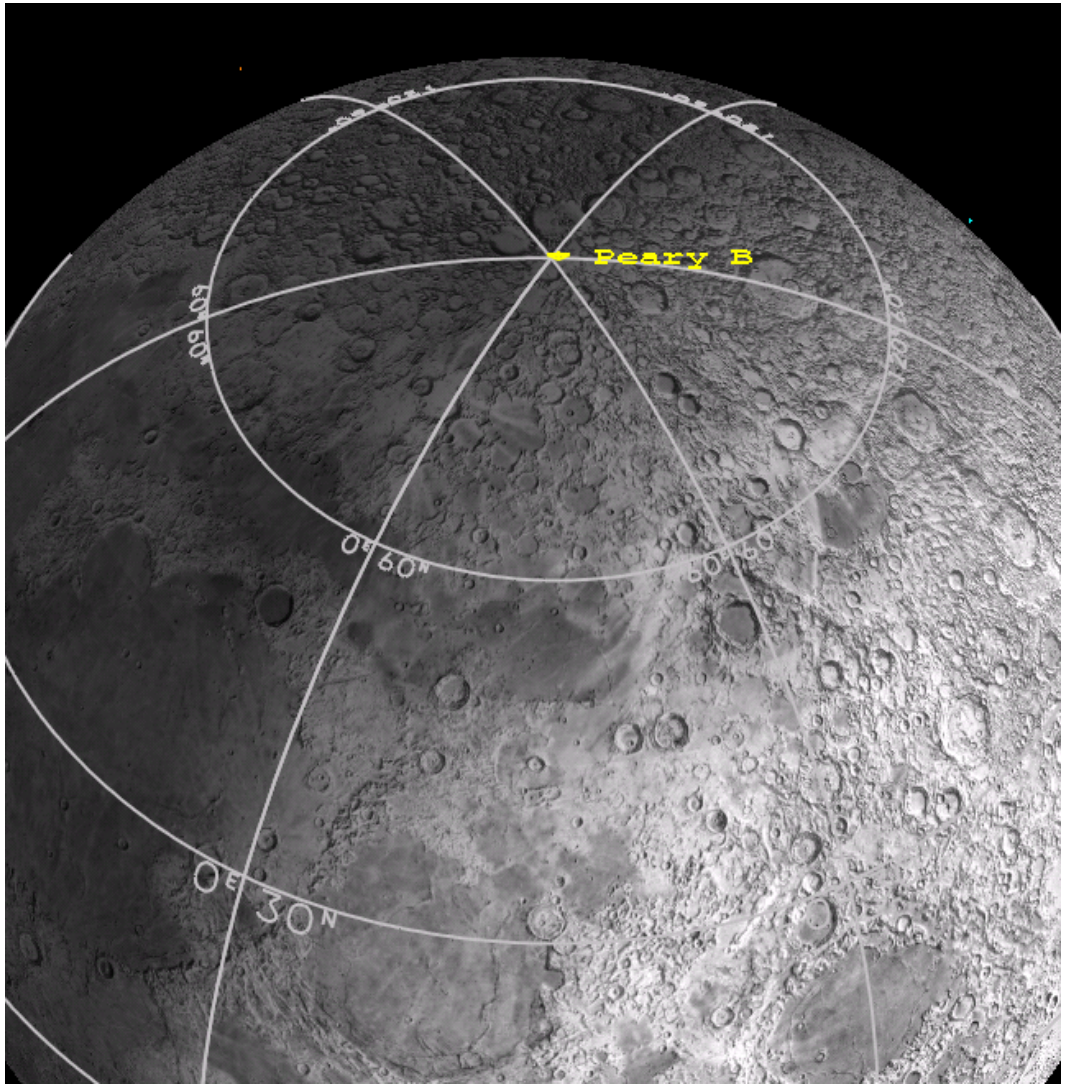

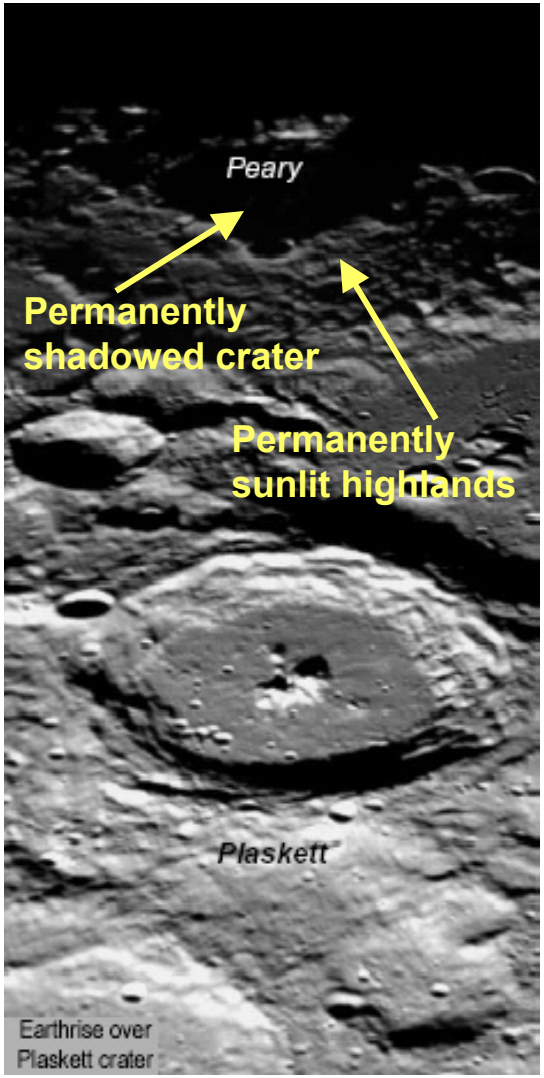

This information is pre-decisional and for discussion purposes only.

Why RPS Power would be enabling for this Mission

- If water ice exists on the Moon, it will be in locations where it is shaded from the sun (e.g., permanently shadowed craters, valleys, subsurface, etc.)
- However, rover operation within a permanently shadowed region would preclude the use of conventional power sources, such as solar energy.
  - I.e., the rover would never see the sun while on the lunar surface.
- The long mission duration precludes the use of batteries alone.
  - Could not fit that many batteries on such a rover. The mass and volume would be prohibitive.

Thus, RPS power is enabling for this mission concept.

This information is pre-decisional and for discussion purposes only.

Water on the Moon????

(Taken from http://nssdc.gsfc.nasa.gov/planetary/ice/ice_moon.html)

- On March 5, 1998 it was announced that data returned by the Lunar Prospector spacecraft indicated that hydrogen is present at both the north and south lunar poles, in agreement with Clementine results for the south pole reported in November 1996.
- Data taken from Lunar Prospector has indicated the possible presence of discrete, confined, near-pure water ice deposits buried beneath as much as 18 inches (40 centimeters) of dry regolith, with the water signature being stronger at the Moon's north pole than at the south.
- The latest results show that the water may be concentrated in localized areas (roughly 1850 square km, or 650 square miles, at each pole).
- The estimated total mass of water ice is 6 trillion kg (6.6 billion tons).
  - *Uncertainties in the models mean this estimate could be off considerably.*

This information is pre-decisional and for discussion purposes only.

Where Did the Ice Come From?

(Taken from http://nssdc.gsfc.nasa.gov/planetary/ice/ice_moon.html)

- The Moon's surface is continuously bombarded by meteorites and comets. Many, if not most, of these impactors contain water ice, and the lunar craters show that many of these were very large objects.
- Any ice which survived impact would be scattered over the lunar surface. Most would be quickly vaporized by sunlight and lost to space, but some would end up inside the permanently shadowed craters, either by directly entering the crater or migrating over the surface as randomly moving individual molecules which would reach the craters and freeze there.
- Once inside the crater, the ice would be relatively stable, so over time the ice would collect in these "cold traps".
- Within these craters, the temperatures would never rise above about 100K (-280°F)
- Any water ice at the bottom of the crater could possibly exist for billions of years at these temperatures.

This information is pre-decisional and for discussion purposes only.

Lunar RPS Rover Concept

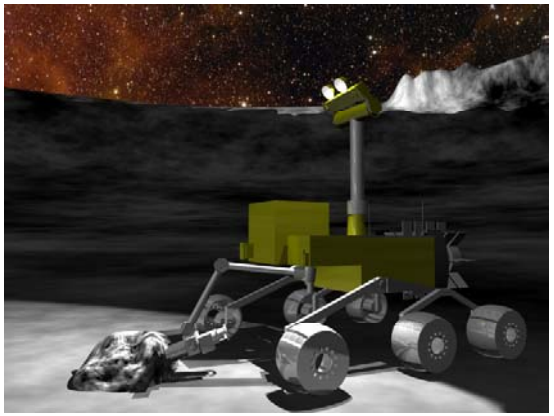

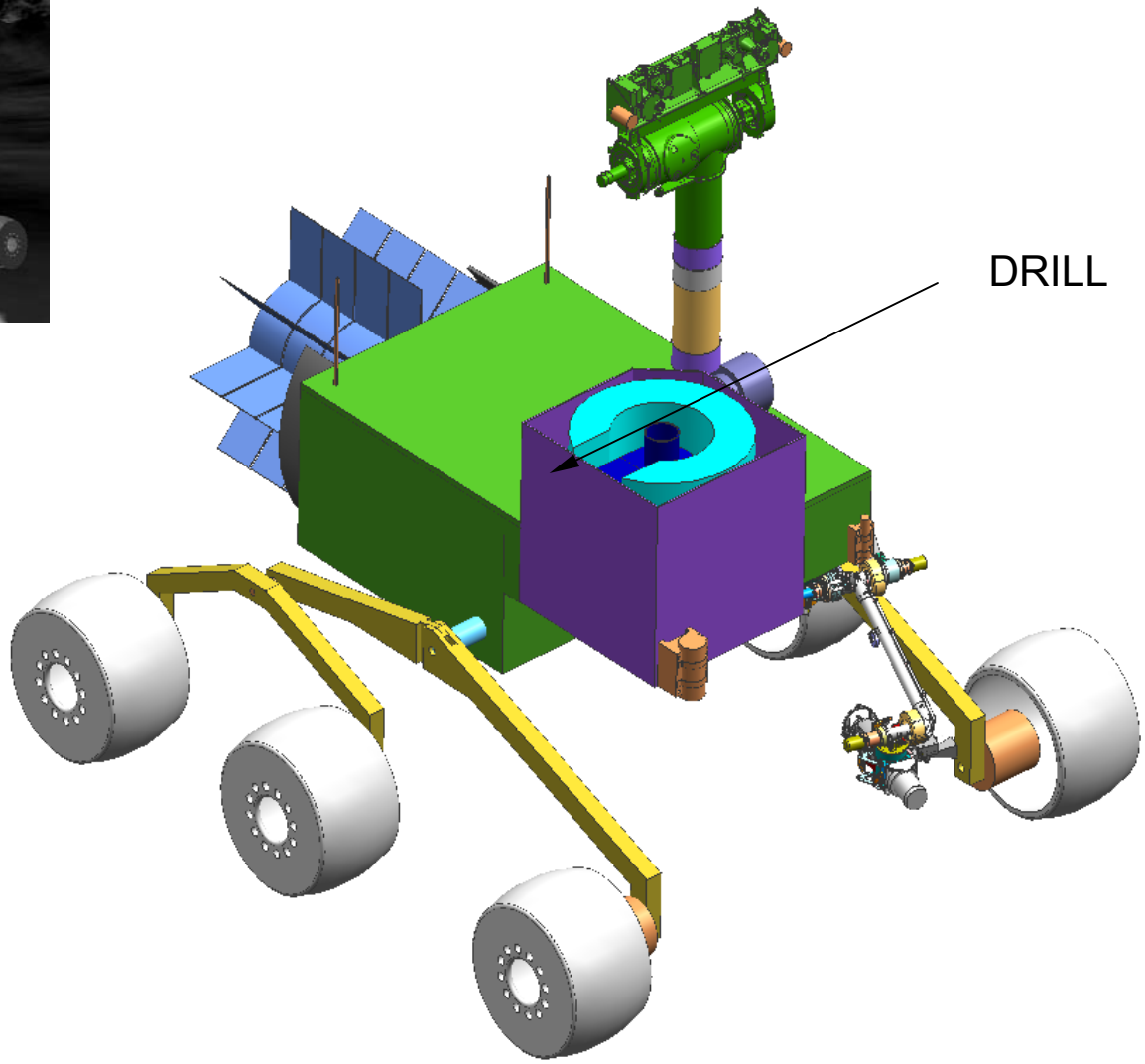

Conceptual Only

This information is pre-decisional and for discussion purposes only.

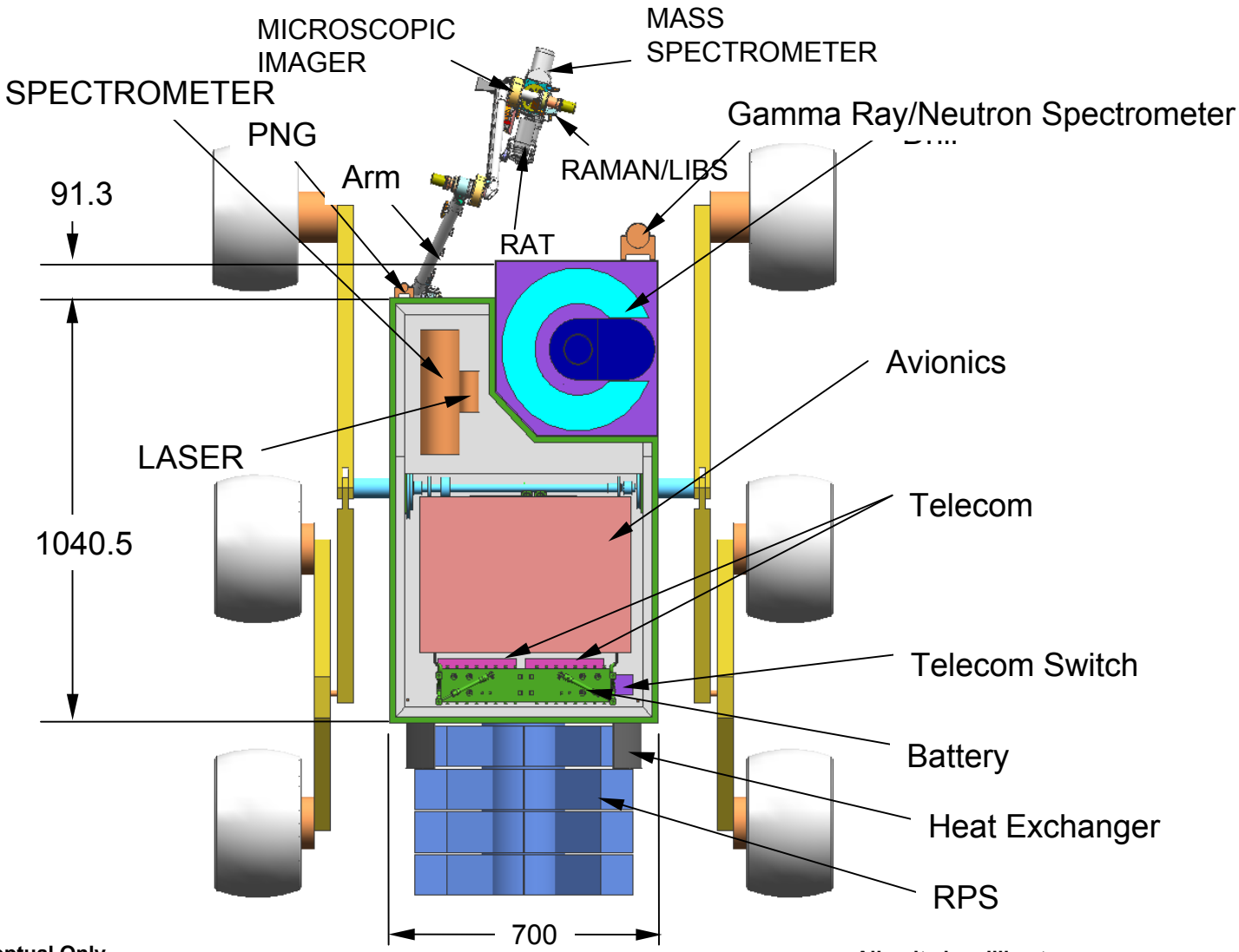

Conceptual Only

All units in millimeters

This information is pre-decisional and for discussion purposes only.

SMALL RPS CHARACTERISTICS - CONCEPTUAL

- Four single GPHS units with radial fins
- Assumed 5% power conversion efficiency at BOM
- Each RPS assumed to generate 12.5 We (BOM).
- Total RPS power output would be 50 We (BOM).
- Excess RPS heat would be used to maintain operating temperatures of rover electronics and mechanisms.
- Would use a radiatively-coupled heat pipe evaporator as heat source for internal thermal control loop.

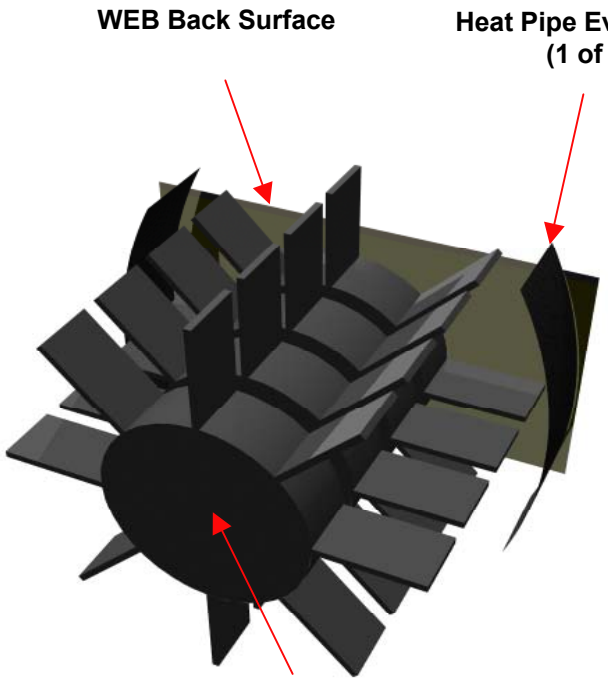

Figure is Conceptual Only

This information is pre-decisional and for discussion purposes only.

Conclusions of the Small-RPS Lunar Rover Study

- The Vision for Space Exploration has targeted the moon as a priority destination for long-duration human exploration.
- Would be more efficient to use in-situ resource utilization to replenish crew supplies than to bring them from earth.
- The Lunar Prospector and Clementine spacecraft detected signs of significant amounts of hydrogen buried near the poles.
  - Peary B crater contains a permanently shadowed crater where water ice could exist, and permanently sunlit highlands where a crew could live
- Solar power not practical for this application as the rover would never see the sun. The mission lifetime would preclude the use of batteries alone.
- RPS is currently the only feasible power option for this mission.
- Four GPHS-based small-RPSs would provide continuous power to the rover (50 We @ BOM) to meet the mission objectives.

This information is pre-decisional and for discussion purposes only.

Overall Summary and Conclusions

This information is pre-decisional and for discussion purposes only.

Conclusions

- Nuclear power systems have been successfully flown on 22 U.S. space missions, with RPSs used on all but one mission.
- RPSs have greatly enhanced, and in many cases, enabled missions that could not have been performed otherwise.
- RPSs have been used to expand our ability to explore the Solar System, including the Sun, our Moon, and all of the outer planets except Pluto (which is the goal of the proposed Pluto-Kuiper Belt mission).
- The long life, robustness, and high reliability of the RPS have made it ideally suitable for autonomous missions in the extreme environments of outer space and on planetary surfaces.
- RPSs have proven themselves to be a safe and effective power source, providing distinct advantages and capabilities to the mission designer that are not achievable with any other type of power source.

This information is pre-decisional and for discussion purposes only.

Questions?

This information is pre-decisional and for discussion purposes only.

Backup Charts

This information is pre-decisional and for discussion purposes only.

Milliwatt Unit Study

BOM Power = 40 mWe (Hi-Z BiTe thermopile)
Cold plate heat rejection at 25 ˚C (no radiator mass)

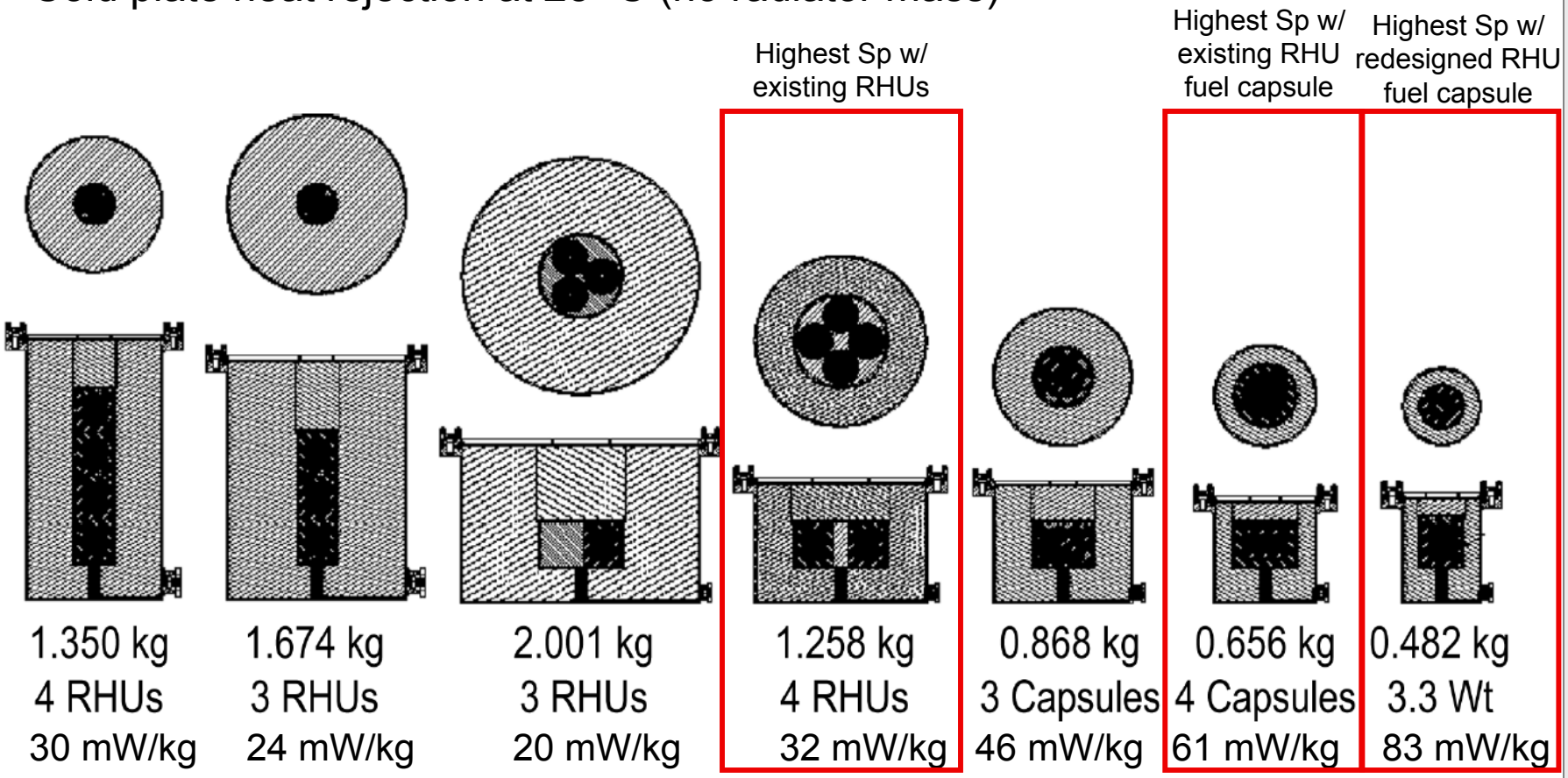

All concepts above use bulk Min-K insulation and can operate in atmospheres.
This information is pre-decisional and for discussion purposes only.