Big Things Come in Small Packages: Mission Concepts Potentially Enabled by Small Radioisotope Power Systems

Robert Dean Abelson, Ph.D.
Systems and Mission Architecture Section
NASA Jet Propulsion Laboratory

March 17-18, 2005

Acknowledgements

The author wishes to acknowledge the following individuals whose efforts and contributions have made this presentation possible.

Small-RPS Mission Studies Team

Tibor Balint
John Elliott
Ellis Miner
Erik Nilsen
Jim Randolph
Celeste Satter
Jim Shirley
Tom Spilker

NASA HQ

George Schmidt

RPS Technology Team

Thierry Caillet
Kip Dodge
Rich Ewell
Jean-Pierre Fleurial
Bill Nesmith
Jeff Schreiber
Virgil Shields
Jeff Snyder
Rao Surampudi

JPL Design Teams

Knut Oxnevad
Wayne Zimmerman
Jackie Green
NPDT

JPL Risk Communication

Mary-Beth Murrill
Sandy Dawson

This information is pre-decisional and for discussion purposes only.

Introduction

- Nuclear power has played a significant role in the exploration of the solar system, in many cases enabling missions that could not have been achieved otherwise.
- Nuclear power systems are comprised of radioisotope power systems (RPSs) and fission reactors.
- RPSs generate electricity from the conversion of the natural decay heat of radioisotope materials.
  - All U.S. RPSs flown to date have used thermoelectric power conversion - These RPSs are known as Radioisotope Thermoelectric Generators (RTGs).
- Fission reactors generate electricity by conversion of the heat from nuclear fission reactions (e.g., splitting atomic nuclei).

This presentation will focus on Radioisotope Power Systems

This information is pre-decisional and for discussion purposes only.

Advantages of RPS Power Systems

- RPSs are able to operate continuously, independent of sunlight.
- Key properties of RPSs (RTGs in particular) are:
  - Long life - *Often measured in decades.*
  - Robustness - *Can handle launch loads, landings, cold of deep space…..*
  - Compact size – *Simplifying spacecraft integration, attitude control, etc.*
  - High reliability - *Use series-parallel connections to mitigate single-point failures.*
  - Scalability – *Can add multiple RPS units to obtain desired power level.*
  - Well-defined degradation mode – *Predictable, graceful.*
  - Produces no noise, vibration or torque during operation
  - Relatively insensitive to radiation.

These properties have made RPSs very suitable for autonomous missions in the extreme environments of outer space and on planetary surfaces.

This information is pre-decisional and for discussion purposes only.

Solar Irradiance in Solar System

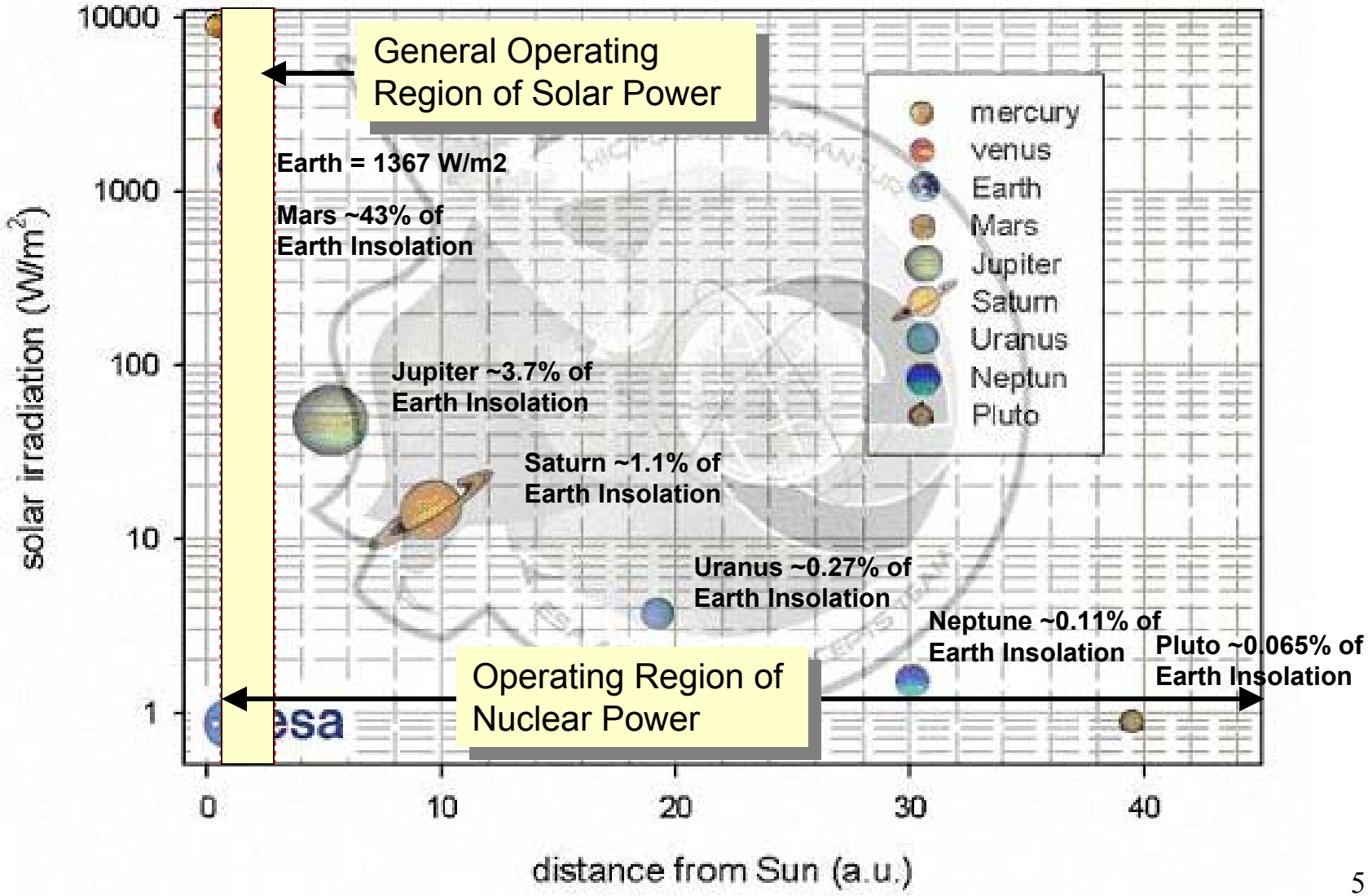

This information is pre-decisional and for discussion purposes only.

Background

- The first RPS (SNAP-3B7) was launched by the United States aboard the "Transit 4A" Earth-orbiting navigational satellite on June 29, 1961.
  - "SNAP" stands for "Systems for Nuclear Auxiliary Power"
- Twenty-four U.S. space missions have used RPSs.
  - Only one U.S. fission reactor has flown in space (SNAP-10A).

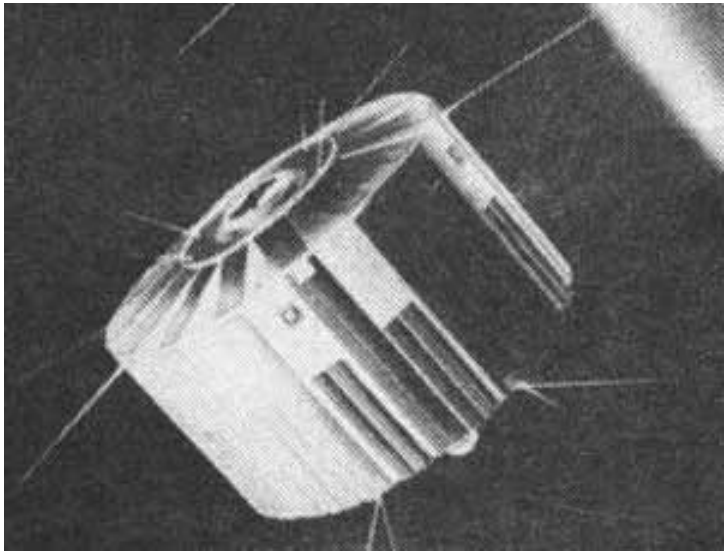

Transit 4A Spacecraft [JHU/APL]

- On the other hand, Russia has flown 35 fission reactors onboard their RORSAT spy satellites and Plasma-A spacecraft.
  - Only a handful (3) of Russian space missions have used RPSs.

This information is pre-decisional and for discussion purposes only.

How do RPSs Work?

This information is pre-decisional and for discussion purposes only.

Radioisotope Power Systems (RPS)

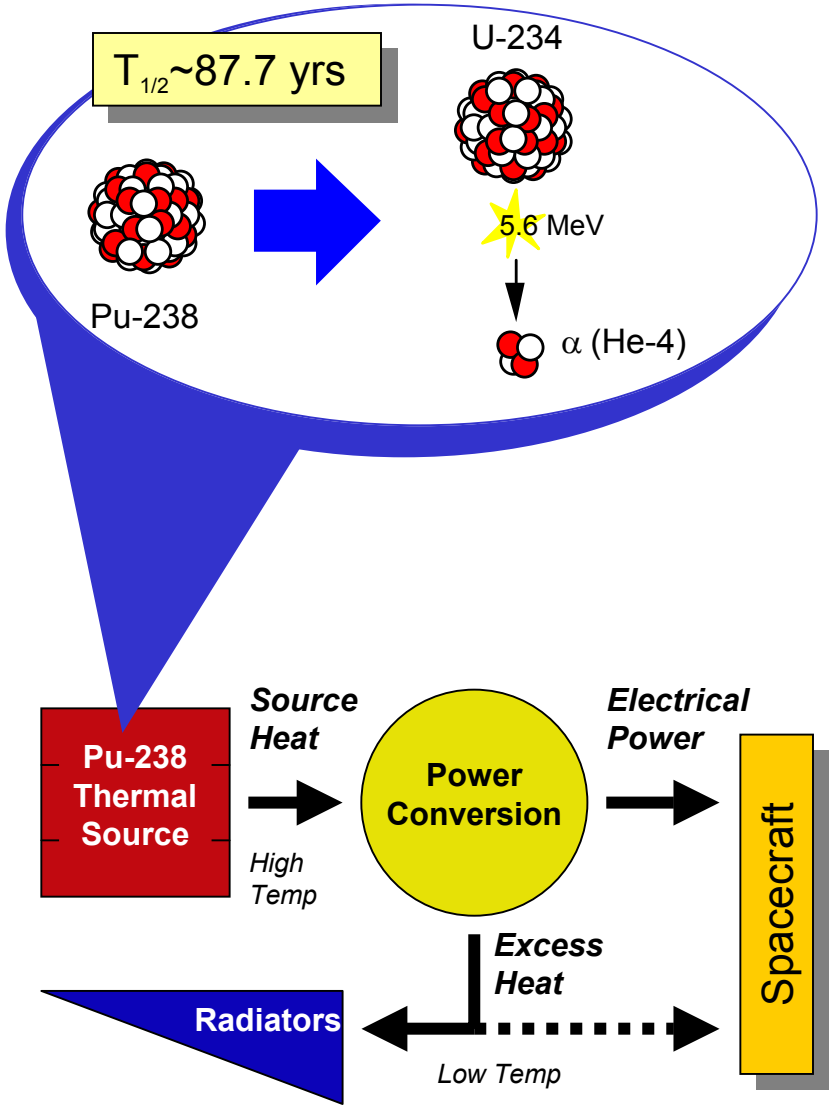

- **Heat produced from natural alpha (α) particle decay of Plutonium (Pu-238)**
- **6% to 25% converted to electrical power**
  - Thermoelectrics (existing & under development)
  - Stirling (under development)
  - Brayton, TPV, Rankine, etc. (future candidates)
- **Rest rejected into space via radiators**
  - Portion available for thermal control of spacecraft subsystems

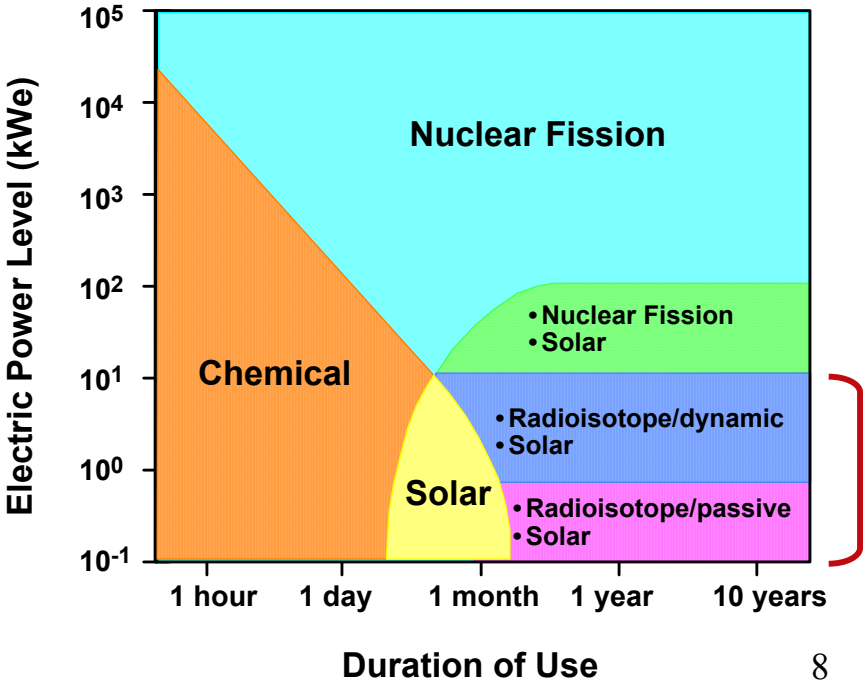

This information is pre-decisional and for discussion purposes only.

RTG Power as Function of Time

- RTG power degrades with time in a predictable manner due to:
  - 1) Decay of the radioisotope fuel (Thermal power decreases ~0.8%/year)
  - 2) Dopant precipitation and sublimation of the thermoelectric material.

Launch

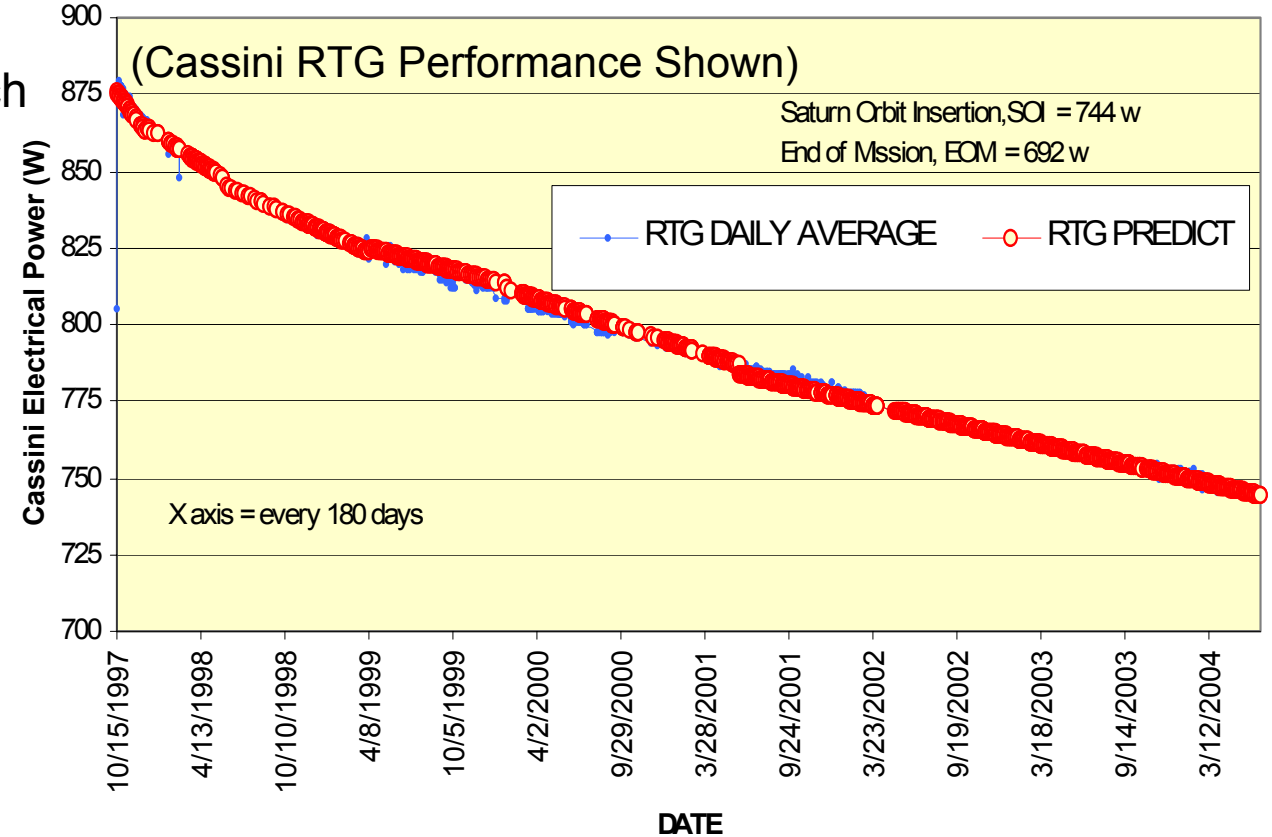

Saturn Orbit Insertion

This information is pre-decisional and for discussion purposes only.

U.S. RPS-Powered Space Missions

Used successfully on 21 missions since 1961

7 Earth orbit (5-Transits, 1-Nimbus, 1-LES constellation)
5 on lunar surface (5-Apollo ALSEP units)
2 on Mars Surface (Viking 1 and 2)
7 Planetary (Pioneer 11 & 12, Voyager 1 & 2, Galileo, Ulysses, Cassini)

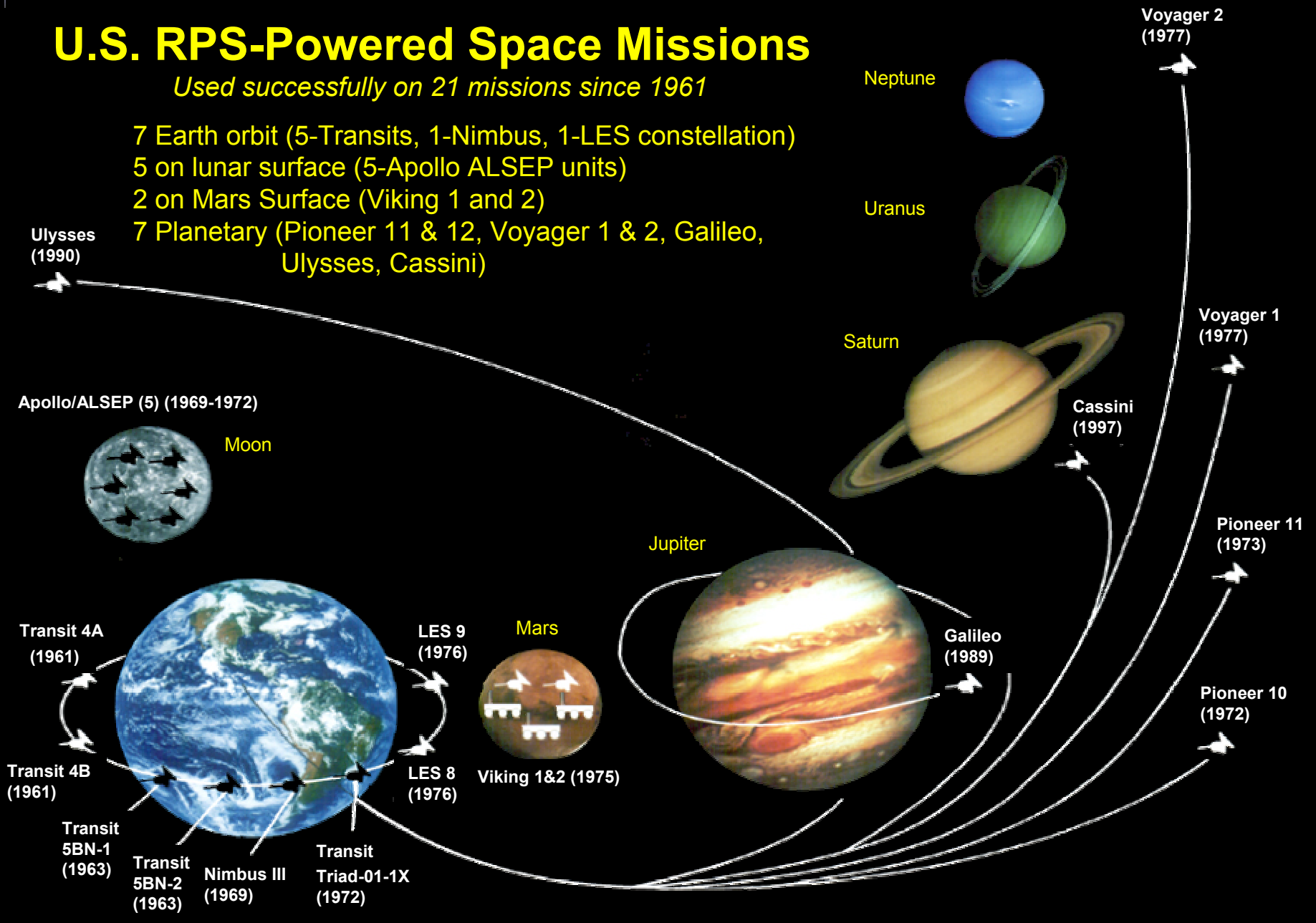

Distances and Planets Are Not to Scale

Radioisotope Power Systems and Mission

Spacecraft	Principal Energy Source (#)	Initial Avg Pwr / NPS (We)	Destination/Application	Launch Date	Status
Transit 4A	SNAP-3B7 RTG (1)	2.7	Earth Orbit / Navigation Satellite	6/29/1961	RTG operated for 15 yrs. Satellite now shut down.
Transit 4B	SNAP-3B8 RTG (1)	2.7	Earth Orbit / Navigation Satellite	11/15/1961	RTG operated for 9 yrs. Operation intermittent after 1962 high alt test. Last signal in 1971.
Transit 5BN-1	SNAP-9A RTG (1)	>25.2	Earth Orbit / Navigation Satellite	9/28/1963	RTG operated as planned. Non-RTG electrical problems on satellite caused failure after 9 months.
Transit 5BN-2	SNAP-9A RTG (1)	26.8	Earth Orbit / Navigation Satellite	12/5/1963	RTG operated for over 6 yrs. Satellite lost navigational capability after 1.5 yrs.
Transit 5BN-3[1]	SNAP-9A RTG (1)	Aborted	Earth Orbit / Navigation Satellite	4/21/1964	Mission aborted because of launch vehicle failure.
SNAPSHOT	SNAP-10A	>500	Experimental	4/3/1965	Reactor operated for 43 days until shutdown by an electrical component failure on the spacecraft.
Nimbus B-1[2]	SNAP-19B2 RTG (2)	Aborted	Earth Orbit / Navigation Satellite	5/18/1968	Mission aborted because of range safety destruct. RTG heat sources recovered and recycled.
Nimbus III	SNAP-19B3 RTG (2)	28.2	Earth Orbit / Navigation Satellite	4/14/1969	RTGs operated for over 2.5 yrs. No data taken after that.
Apollo 11	ALRH Heater	Heater Only	Lunar Surface / Science Payload	7/16/1969	Heater units for seismic experimental package. Station shut down Aug 3, 1969.
Apollo 12	SNAP-27 RTG (1)	73.6	Lunar Surface / Science Payload	11/14/1969	RTG operated for about 8 years until station was shut down.
Apollo 13[3]	SNAP-27 RTG (1)	Aborted	Lunar Surface / Science Payload	4/13/1970	Mission aborted. RTG reentered intact with no release of Pu-238. Currently located at bottom of Tonga Trench.
Apollo 14	SNAP-27 RTG (1)	72.5	Lunar Surface / Science Payload	1/31/1971	RTG operated for over 6.5 years until station was shut down.
Apollo 15	SNAP-27 RTG (1)	74.7	Lunar Surface / Science Payload	7/26/1971	RTG operated for over 6 years until station was shut down.
Pioneer 10	SNAP-19 RTG (4)	40.7	Planetary / Payload & Spacecraft	3/2/1972	Last signal received on January 23, 2003. Spacecraft now well beyond orbit of Pluto.
Apollo 16	SNAP-27 RTG (1)	70.9	Lunar Surface / Science Payload	4/16/1972	RTG operated for about 5.5 years until station was shut down.
Triad-01-1X	Transit-RTG (1)	35.6	Earth Orbit / Navigation Satellite	9/2/1972	RTG still operating as of mid-1990s.
Apollo 17	SNAP-27 RTG (1)	75.4	Lunar Surface / Science Payload	12/7/1972	RTG operated for almost 5 years until station was shut down.
Pioneer 11	SNAP-19 RTG (4)	39.9	Planetary / Payload & Spacecraft	4/5/1973	Last signal received on September 30, 1995. Spacecraft now well beyond orbit of Pluto.
Viking 1	SNAP-19 RTG (2)	42.3	Mars Lander / Payload & Spacecraft	8/20/1975	RTGs operated for over 6 years until lander was shut down.
Viking 2	SNAP-19 RTG (2)	43.1	Mars Lander / Payload & Spacecraft	9/9/1975	RTGs operated for over 4 years until relay link was lost.
LES 8, LES 9[4]	MHW-RTG (4)	153.7, 154.2	Earth Orbit / Com Satellites	3/14/1976	LES 8 was shutdown in 2004. LES 9 continues to operate.
Voyager 2	MHW-RTG (3)	159.2	Planetary / Payload & Spacecraft	8/20/1977	RTGs still operating. Spacecraft successfully operated to Jupiter, Saturn, Uranus, Neptune, and beyond.
Voyager 1	MHW-RTG (3)	156.7	Planetary / Payload & Spacecraft	9/5/1977	RTGs still operating. Spacecraft successfully operated to Jupiter, Saturn, and beyond.
Galileo	GPHS-RTG (2) RHU Heater (120)	287.1	Jupiter Orbiter / Payload & Spacecraft	10/18/1989	RTGs continued to operate until 2003, when spacecraft was intentionally deorbited into Jupiter atmosphere.
Ulysses	GPHS-RTG (1)	282	Polar Solar Orbiter / Payload & Spacecraft	10/6/1990	RTG continues to operate successfully after 14 years. Spacecraft conducting polar solar orbits.
Mars Pathfinder	RHU Heater (3)	Heater Only	Mars Surface Rover / Electronics	12/4/1996	Heater units used to maintain payload temperature. Units still presumed active.
Cassini	GPHS-RTG (3) RHU Heater (117)	293	Saturn Orbiter / Payload & Spacecraft	10/15/1997	RTGs continue to operate successfully after 7 years. Spacecraft entered Saturn orbit in 2004.
Mars MER Spirit	RHU Heater (8)	Heater Only	Mars Surface Rover / Batteries and Electronics	6/10/2003	Heater units still operational and used to maintain payload temperature.
Mars MER Opportunity	RHU Heater (8)	Heater Only	Mars Surface Rover / Batteries and Electronics	7/7/2003	Heater units still operational and used to maintain payload temperature.

A Quick Look at RPS Systems used on NASA Space Missions

Previous, Present, and Proposed

This information is pre-decisional and for discussion purposes only.

SNAP 19 RTG

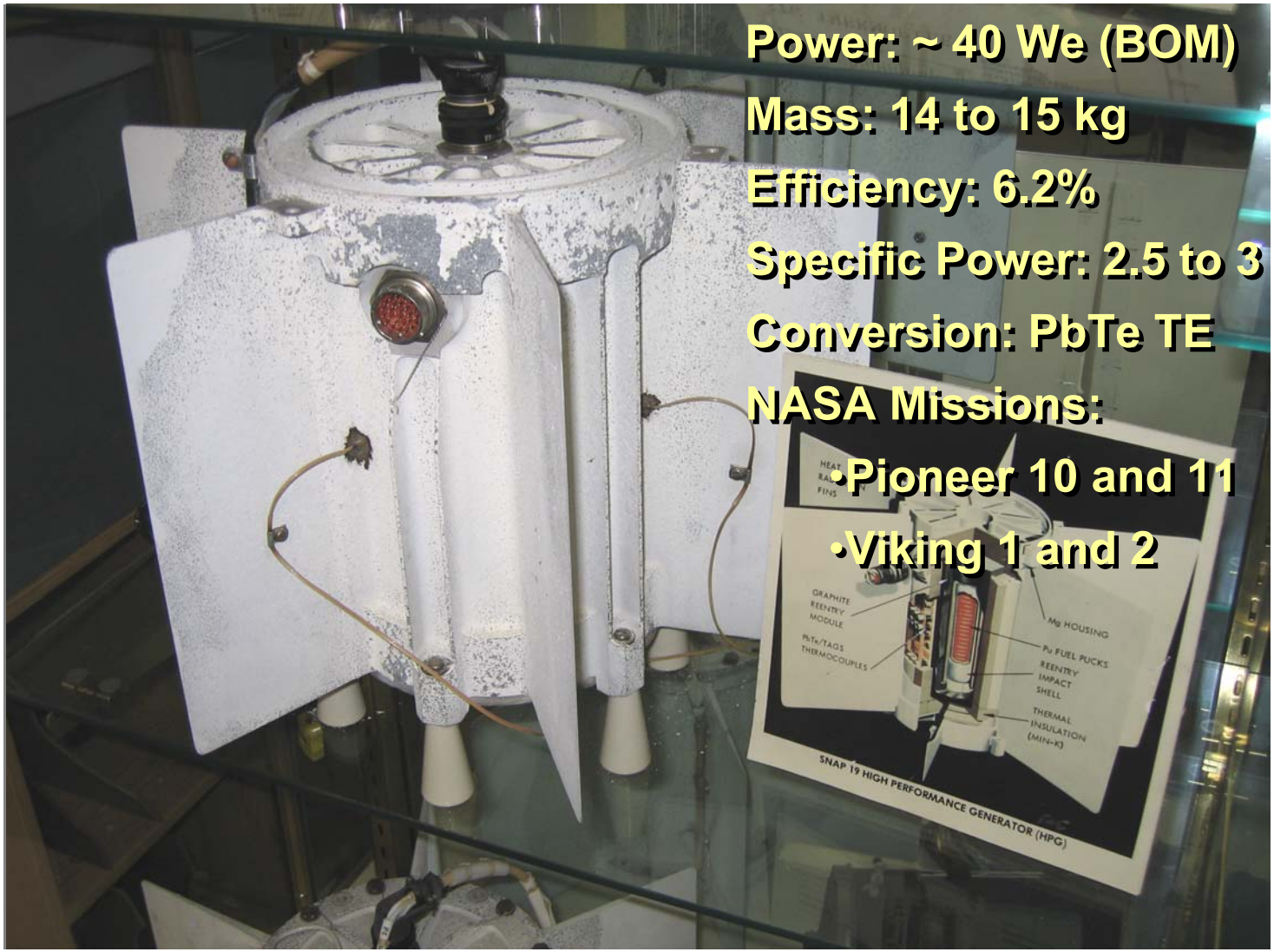

Power: ~ 40 We (BOM)

Mass: 14 to 15 kg

Efficiency: 6.2%

Specific Power: 2.5 to 3 We/kg

Conversion: PbTe TE

NASA Missions:

- Pioneer 10 and 11
- Viking 1 and 2

This information is pre-decisional and for discussion purposes only.

Viking Landers

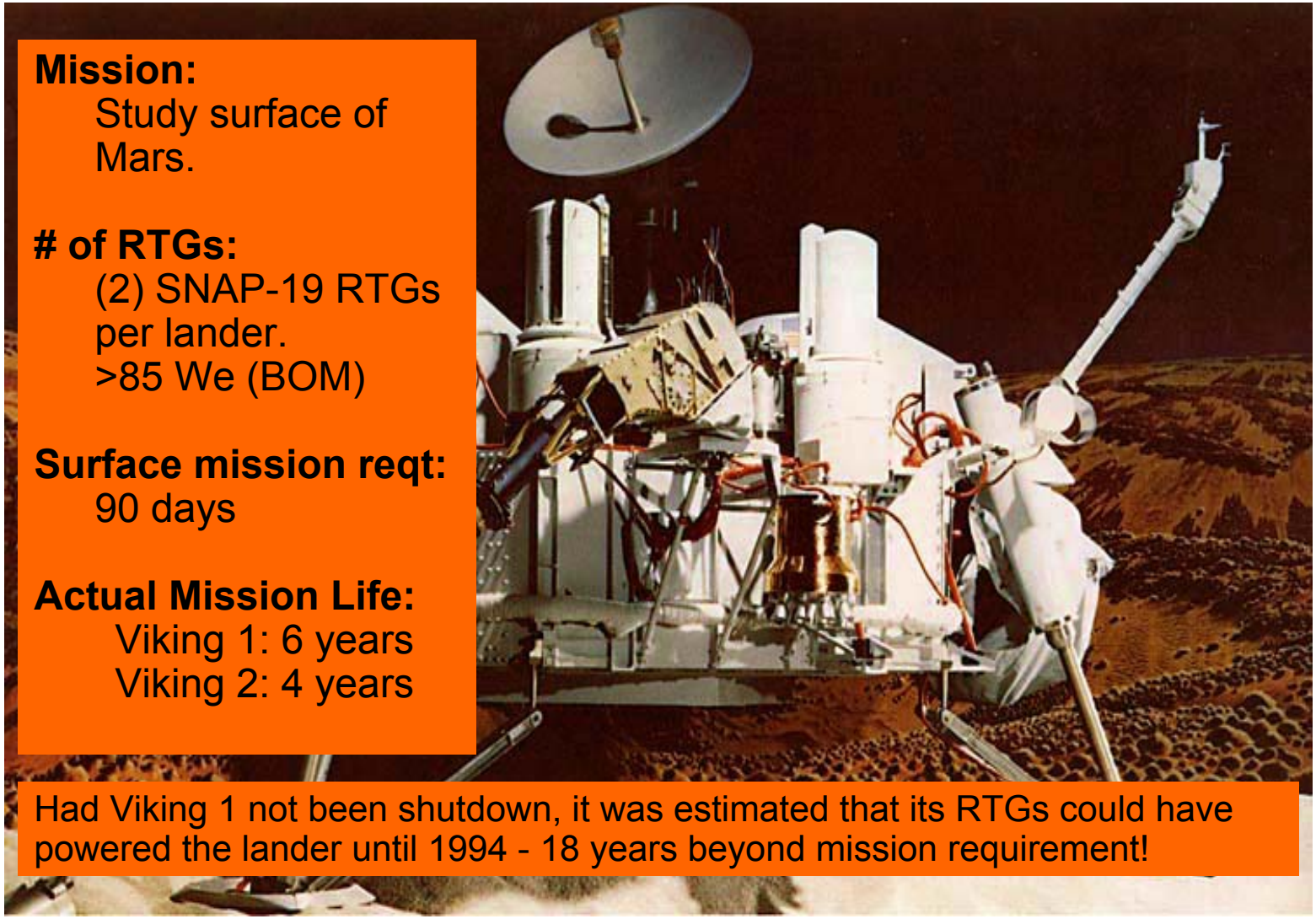

Mission:
Study surface of Mars.

# of RTGs:
(2) SNAP-19 RTGs per lander.
>85 We (BOM)

Surface mission reqt:
90 days

Actual Mission Life:
Viking 1: 6 years
Viking 2: 4 years

Had Viking 1 not been shutdown, it was estimated that its RTGs could have powered the lander until 1994 - 18 years beyond mission requirement!

This information is pre-decisional and for discussion purposes only.

Pioneer 10 and 11 Probes

Mission:
Perform close-up observations of Jupiter (Pioneer 10 and 11) and Saturn (Pioneer 11).

# of RTGs:
(4) SNAP-19 RTGs per probe. Corresponds to ~160 We/probe.

Mission requirement:
3 years

Actual Mission Life:
Pioneer 10: 23 years
Pioneer 11: 31 years

First spacecraft to leave the solar system!!

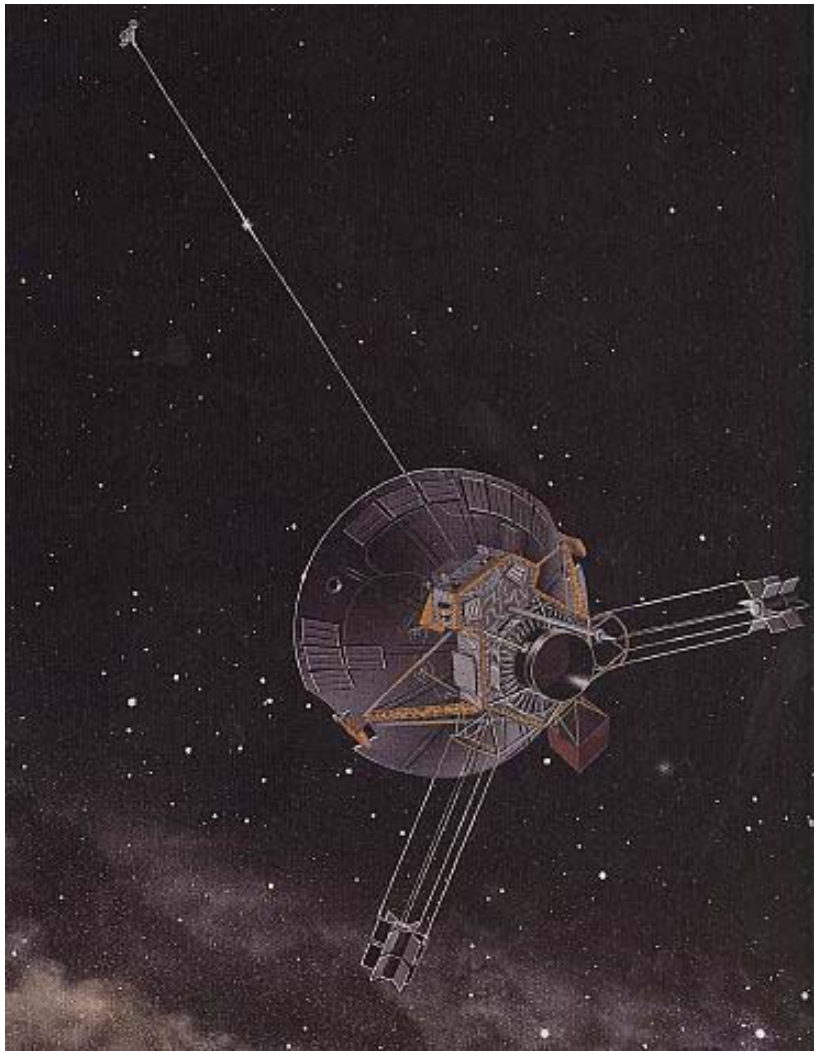

This information is pre-decisional and for discussion purposes only.

SNAP 27 RTG

Powered the Apollo Lunar Surface Experiments Package (ALSEP) on 5 Apollo Missions

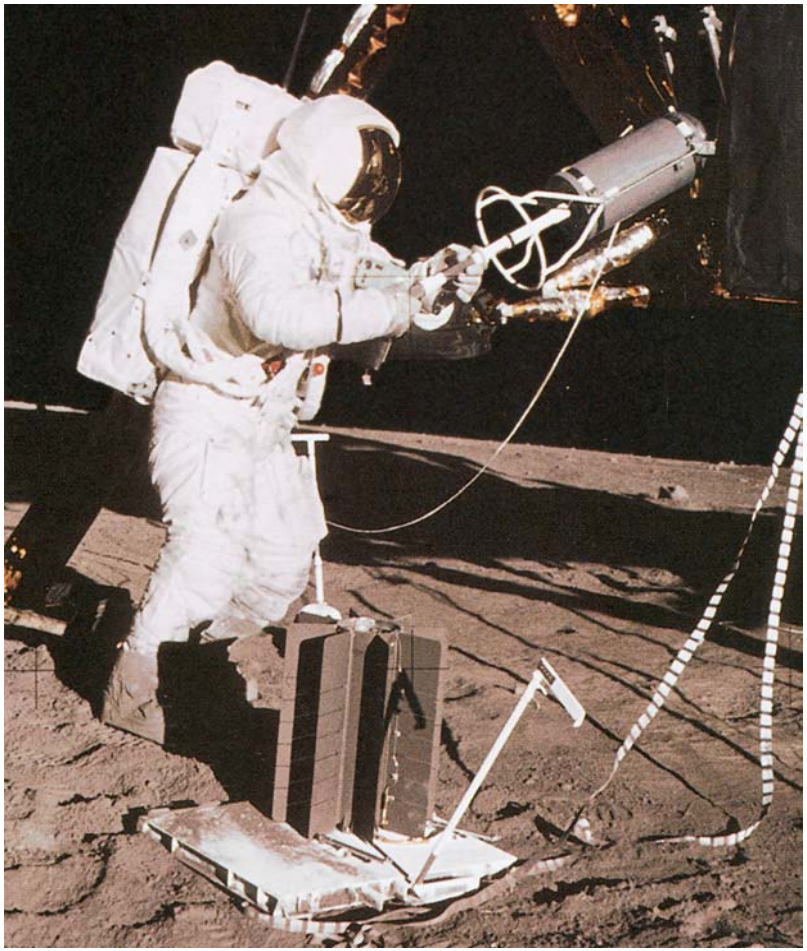

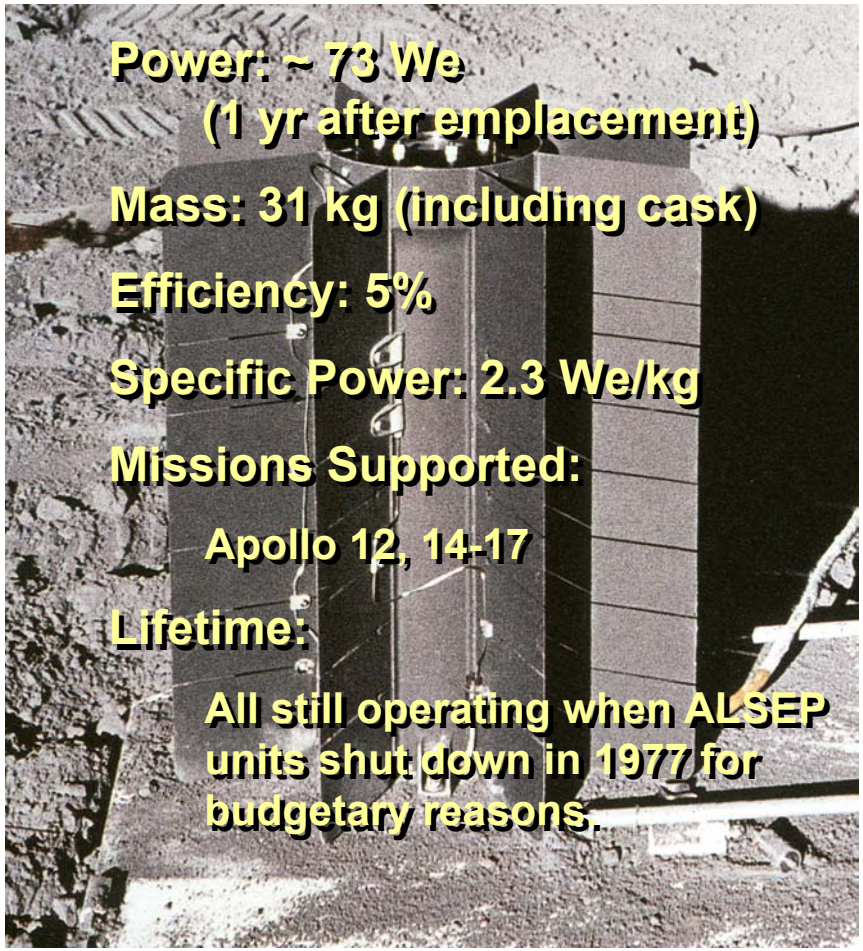

Power: ~ 73 We
(1 yr after emplacement)

Mass: 31 kg (including cask)

Efficiency: 5%

Specific Power: 2.3 We/kg

Missions Supported:

Apollo 12, 14-17

Lifetime:

All still operating when ALSEP units shut down in 1977 for budgetary reasons.

This information is pre-decisional and for discussion purposes only.

Multi-Hundred Watt (MHW) RTG

Power: ~158 We (BOM)

Mass: 38.5 kg

Efficiency: 6.6% Specific Power: ~4.1 We/kg

Missions Supported:

LES 8 and 9 (2 RTGs per satellite)

Voyager 1 & 2 (3 RTGs per spacecraft)

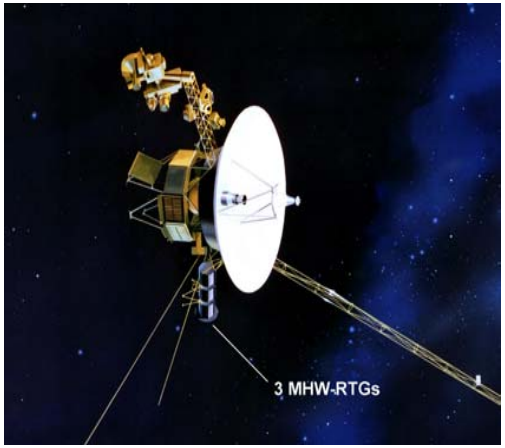

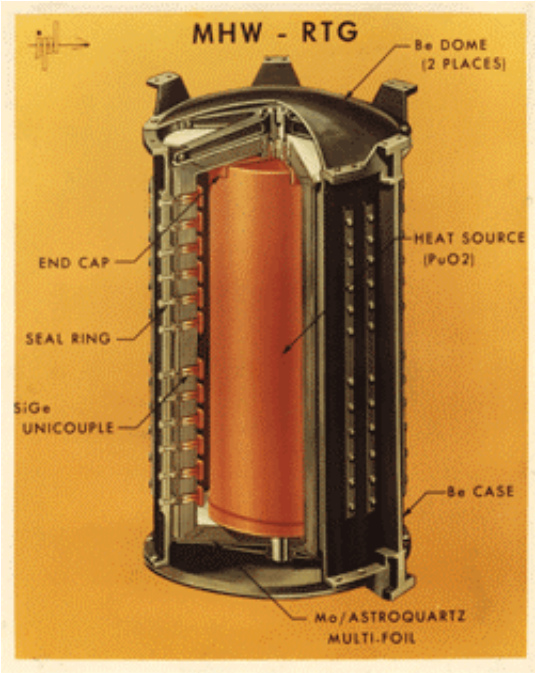

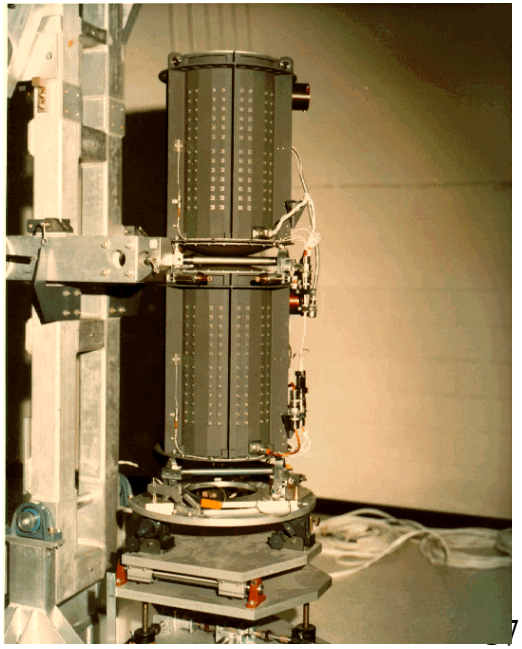

This information is pre-decisional and for discussion purposes only.

GPHS-RTG – *Current SOA*

Power: ≥285 We (BOM)

Mass: 55.9 kg

Efficiency: 6.8% Specific Power: 5.2 We/kg

Missions Supported:

Galileo (2 RTGs) Ulysses (1 RTG)

Cassini (3 RTGs) Proposed Pluto-KB (1 RTG)

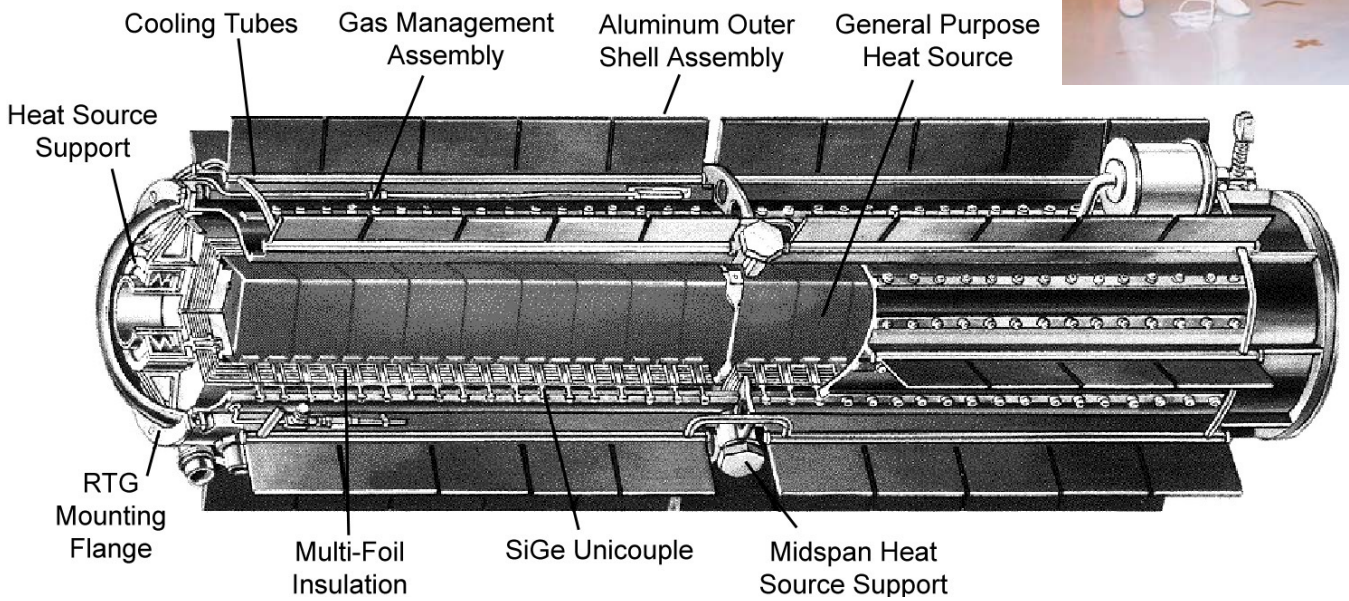

This information is pre-decisional and for discussion purposes only.

Missions Using the GPHS-RTG

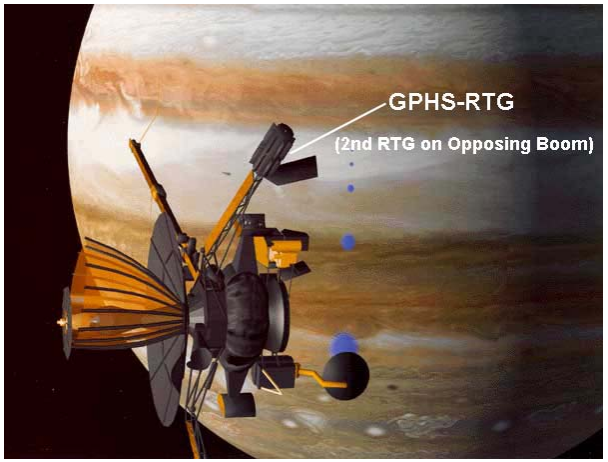

Galileo – Jupiter Orbiter (~574 We BOM)

Cassini – Saturn Orbiter (~880 We BOM)

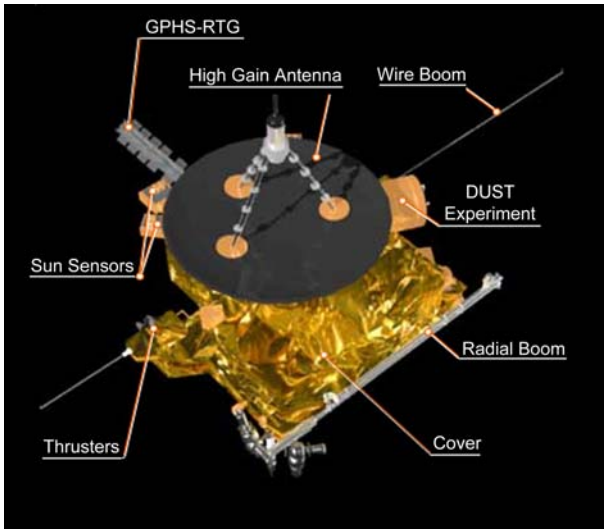

Ulysses - Polar Solar Orbiter (~282 We BOM)

Proposed Pluto-KB – Flyby of Pluto and Kuiper Belt objects [JHU/APL].

This information is pre-decisional and for discussion purposes only.

Next Generation Standard RPSs

- Designed to operate in deep space and on planetary surfaces (i.e., Mars).
- Multi-Mission Radioisotope Thermoelectric Generator (MMRTG)
  - **Power: >110 We (BOM)**
  - **Mass: 43 kg**
  - **Efficiency: 6.2% to 6.3% (BOM)**
  - **Specific Power: 2.9 We/kg (BOM)**
- Stirling Radioisotope Generator (SRG)
  - **Power: >110 We at BOM**
  - **Mass: 34 kg**
  - **Efficiency: 21 to 24% (BOM)**
  - **Specific Power: 3.0 to 3.4 We/kg (BOM)**

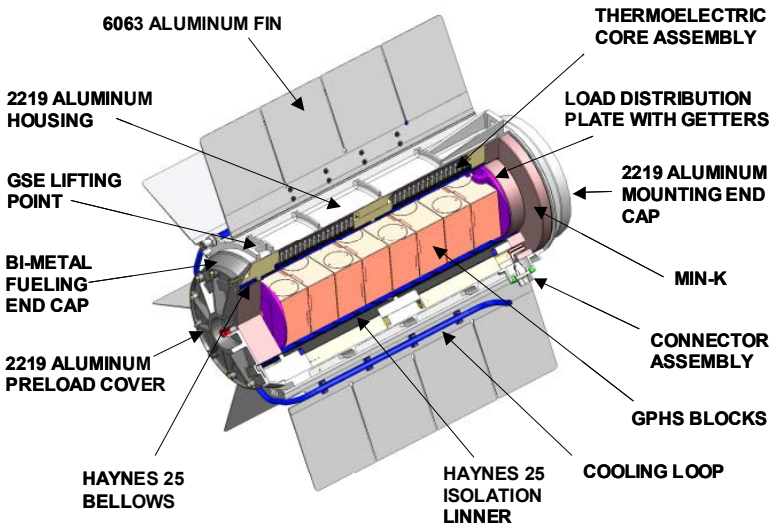

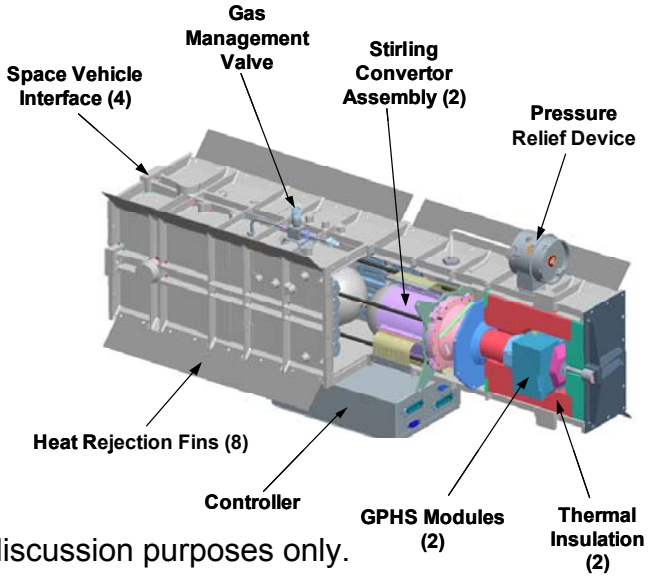

This information is pre-decisional and for discussion purposes only.

Proposed Standard RPS Missions

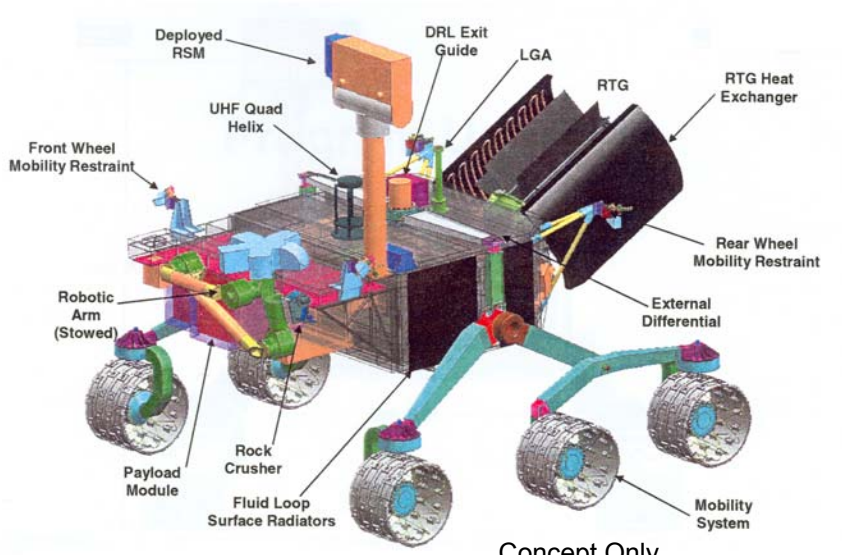

Concept Only

Mars Science Lab

- Next generation Mars rover.
- Would have significantly enhanced instrumentation and larger payload capability than previous robotic rovers.
- Proposing to use one MMRTG to provide greater traverse range and mission lifetime, as well as access to higher and lower latitudes.
- Currently scheduled to launch in 2009

Solar Probe

- Designed to understand the basic mechanisms of the generation and flow of the solar wind, the process that links the Sun's magnetic field to the Earth and beyond.
- Perihelion = 4 solar radaii.
- Is currently proposing three MMRTGs.
- Baseline launch date is August 2012.

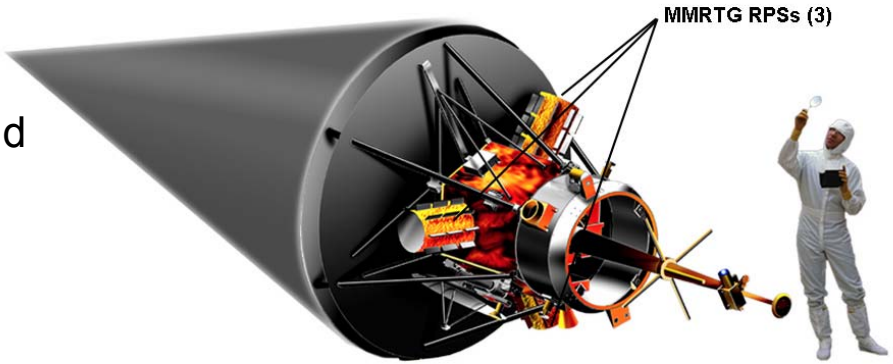

Concept Only [GSFC]

This information is pre-decisional and for discussion purposes only.

What are Small RPSs and what can they do for us?

This information is pre-decisional and for discussion purposes only.

Small RPSs

- No flight-qualified RPSs currently exist below 285 We (GPHS-RTG).
  - MMRTG and SRG (>110 We) expected to come on-line in 2009 to 2010.
- In 2003 and 2004, NASA HQ asked the question:

  "What missions and applications could be enabled by a potential new class of low-powered RPS."
- A set of RPS mission studies and surveys was performed by JPL, Ames and Goddard to identify the range of missions and applications that could potentially use a low-power small RPS system.
- The results of the study suggested that small RPSs (~40 mWe to several few tens of We) could greatly enhance and, in some cases, enable certain science and exploration missions
  - Small autonomous landers, rovers, and adjunct satellites.
  - Long-lived autonomous science stations (weather, seismic, etc.)
  - Other applications (beacons, communications relays, etc.)

This information is pre-decisional and for discussion purposes only.

Potential Small RPS Heat Sources

This information is pre-decisional and for discussion purposes only.

Radioisotope Heater Unit (RHU)

- Purpose: Thermal control and potential future RPS heat source.
- Power Output: 1 Wt (BOL)
- Fuel: Plutonium 238 Oxide (PuO_2)
- Clad: Platinum alloy
- Aeroshell: Graphite, Carbon fiber.
- Weight: 1.4 Oz
- Size: 1” (diameter) x 1.3” (high)
  - (Similar to a D-Cell Battery)
- # Used on NASA Space Missions:
  - Galileo - 120
  - Cassini - 117
  - Mars Pathfinder Rover - 3
  - Mars Exploration Rovers - 8 (on each)

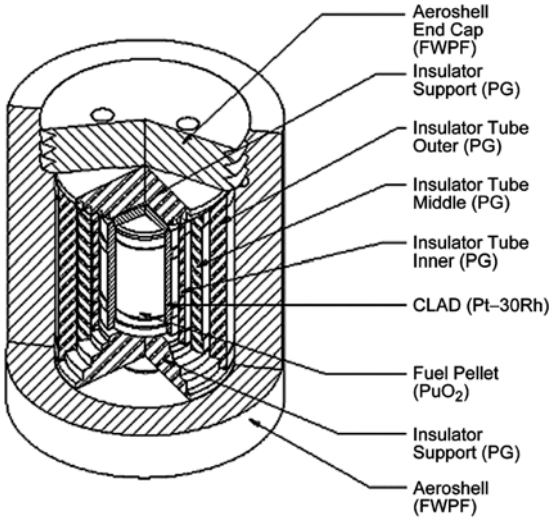

This information is pre-decisional and for discussion purposes only.

General Purpose Heat Source (GPHS)

- Purpose: RPS Heat Source
- Power Output: 250 Wt (BOL)
- Aeroshell: Graphite, Carbon Fiber
- Fuel: Four $Pu^{238}O_2$ Capsules
- Clad: Iridium
- Weight: ~3.54 lbs (Step 2 Design)
- Size: 3.9” x 3.7” x 2.3”
- # Used on NASA Space Missions
  - Galileo - 36
  - Cassini - 54
  - Ulysses - 18
  - Pluto Kuiper-Belt (Proposed) - 18

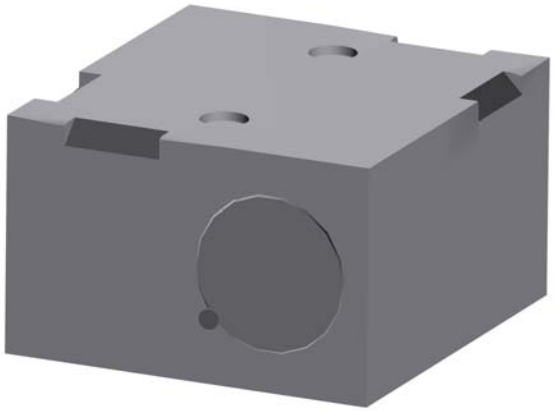

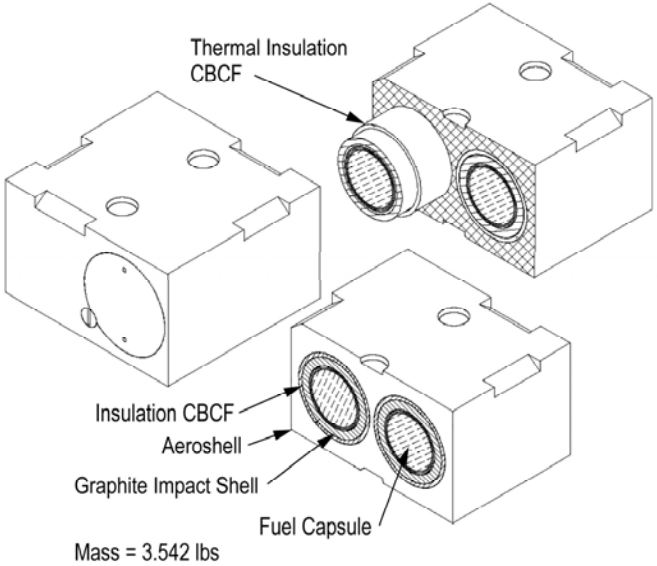

This information is pre-decisional and for discussion purposes only.

Potential Near-Term Small RPS Conversion Technologies

This information is pre-decisional and for discussion purposes only.

Thermoelectric Power Conversion

- Solid-State (Static) Power Conversion

- The fundamental physical process involved in TE power conversion is the Seebeck effect.
  - Is the electromotive force (EMF) that arises between two dissimilar materials when their junction is subjected to a temperature difference.
  - The EMF generated by the thermocouple can be used to drive an electric circuit (or a spacecraft).

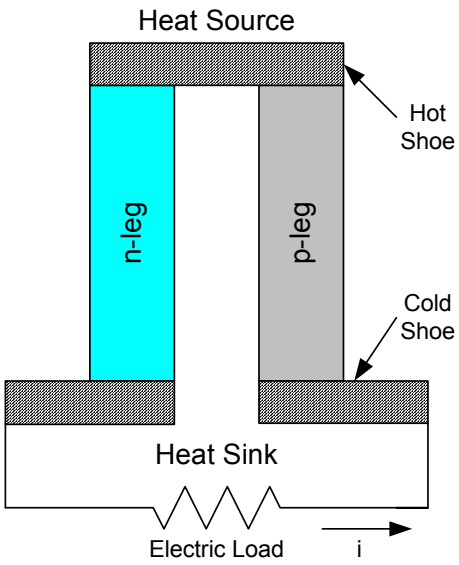

- Multiple Thermoelectric Materials have been Used/Researched:
  - Silicon Germanium (SiGe) - Efficiencies of ~6 to 7%
  - Lead Telluride (PbTe) -TAGS - Efficiencies of ~5 to 7%
  - Bismuth Telluride (BiTe) - Efficiencies of 2.5% to 4.5%
  - Segmented PbTe-TAGS/BiTe – Efficiencies ~9%.
  - Skutterudites – Efficiencies > 9%

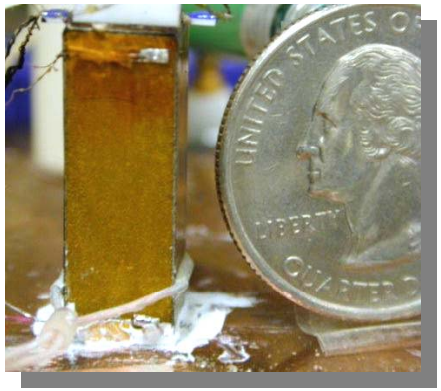

This information is pre-decisional and for discussion purposes only.

Stirling Power Conversion

- Dynamic power conversion.
- Is comprised of a free-piston Stirling engine and linear alternator for power conversion.
- Uses a double piston system.
  - The displacer shuttles the working fluid between the expansion and compression spaces.
  - The power piston reciprocates and drives the alternator.
- Higher conversion efficiencies than thermoelectrics (>20% achieved in lab).
- Translates into less Pu fuel required for the same power output as thermoelectrics.
- One design considered “potentially feasible” by 2011 timeframe for Small RPS application.
- Power output of 10 We.
- System Conversion efficiency of 18.5%.

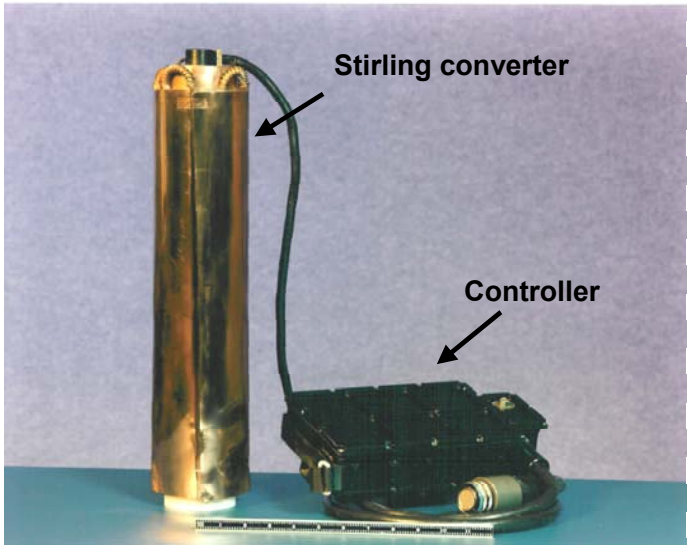

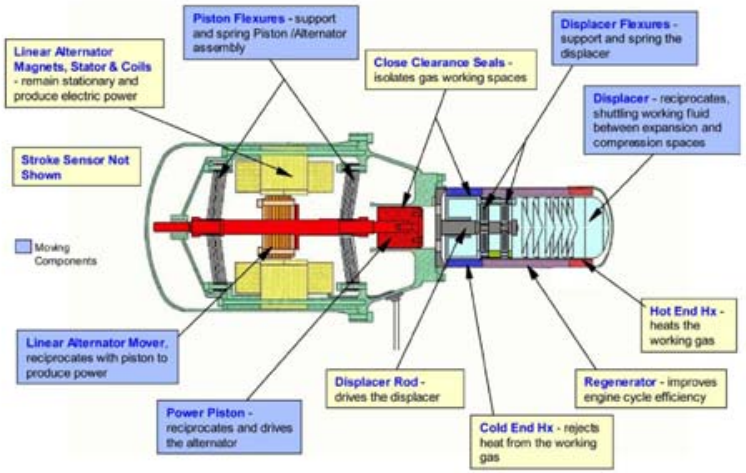

Figure 3-3. Cutaway of Stirling Convertor Integrated with a Linear Alternator in a Hermetically Sealed Pressure Vessel

This information is pre-decisional and for discussion purposes only.

Stirling Power Convertor

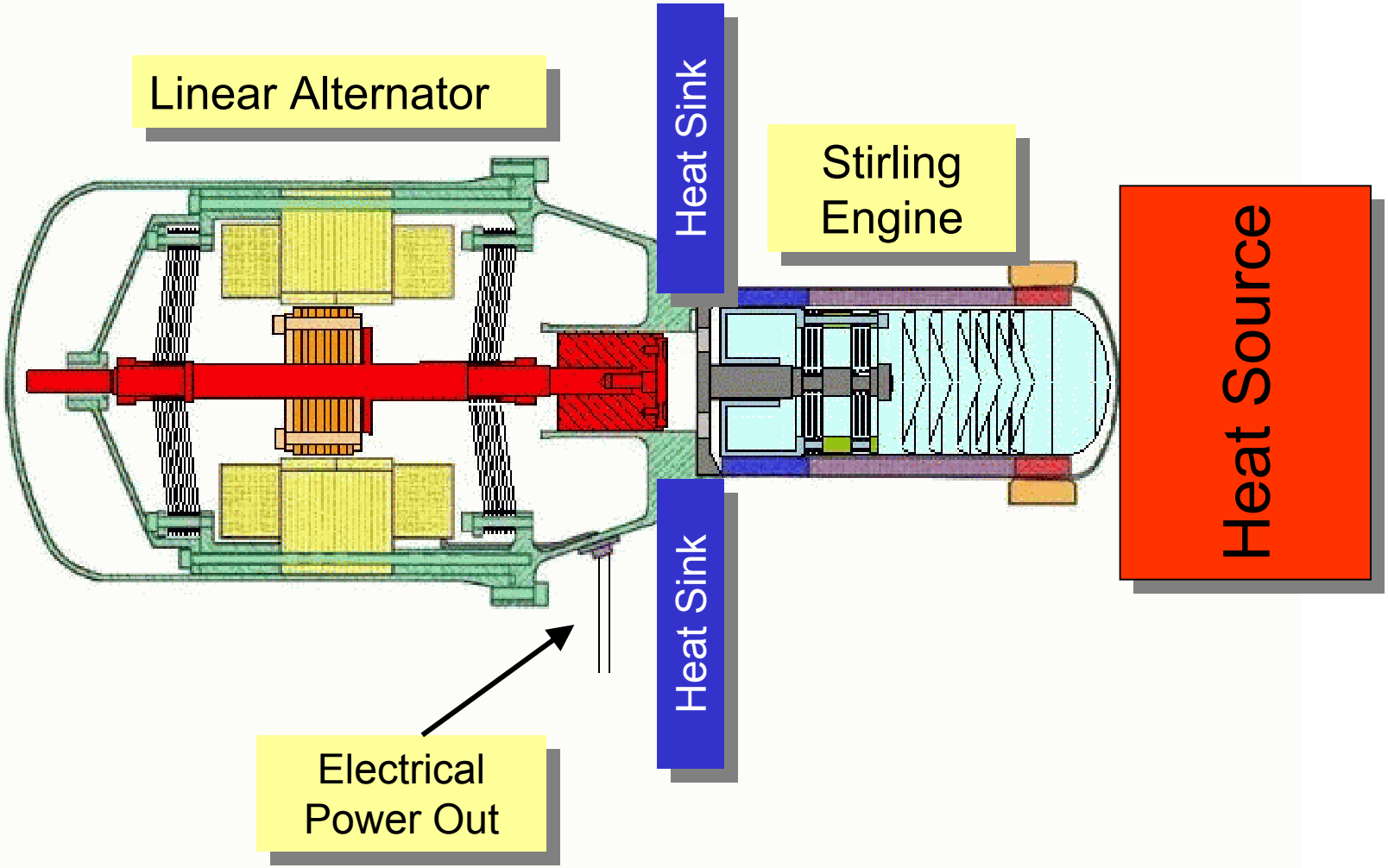

This information is pre-decisional and for discussion purposes only.

Conceptual Small RPS power Systems

This information is pre-decisional and for discussion purposes only.

Conceptual Milliwatt RPSs

All based on RHU Heat Sources and Thermoelectrics

- JPL/Swales Milliwatt Concept
  - Power Output: 20mWe (BOL)
  - Mass: 0.298kg / 2% Efficiency
- DOE Milliwatt Concept
  - Power Output: 40mWe (BOL)
  - Mass: 1.258kg / 4% Efficiency
- Hi-Z Milliwatt Concept
  - Power Output: 40mWe (BOL)
  - Mass: 0.325kg / 4% Efficiency
- ARC Milliwatt Concept
  - Power Output: 40mWe (BOL)
  - Mass: 121g / 4% Efficiency
- BIAPOS Milliwatt Concept
  - Power Output: 25mWe (BOL)
  - Mass: 270g / 2.5% Efficiency

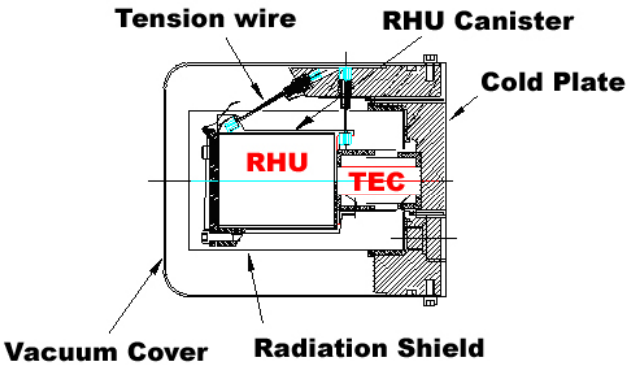

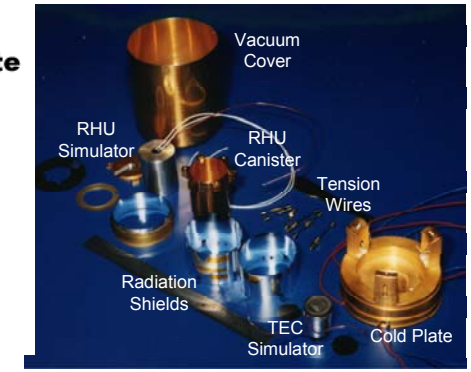

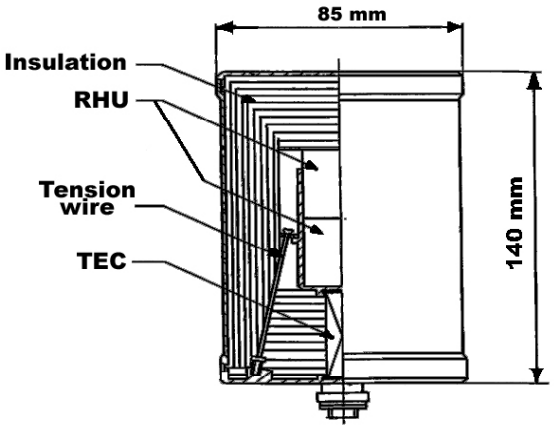

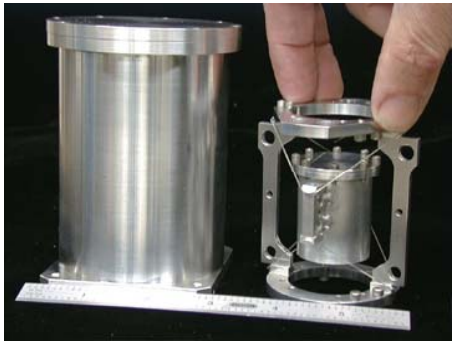

This information is pre-decisional and for discussion purposes only.

Conceptual Multi-Watt RPSs

All based on GPHS Heat Sources and Thermoelectrics (TEs)

- Current Concept
  - Power: ~12.5 We (BOL)
  - Mass: ~5 kg / 5% Efficiency
  - Assumes existing TEs
- Near Term Concept
  - Power Output: ~18 We (BOL)
  - Mass: ~5 kg / 7% Efficiency
  - Assumes advanced TEs
- Far Term Concept
  - Power Output: ~18 We (BOL)
  - Mass: ~3 kg, / 7% Efficiency
  - Assumes advanced Close-Packed Array (CPA)TEs

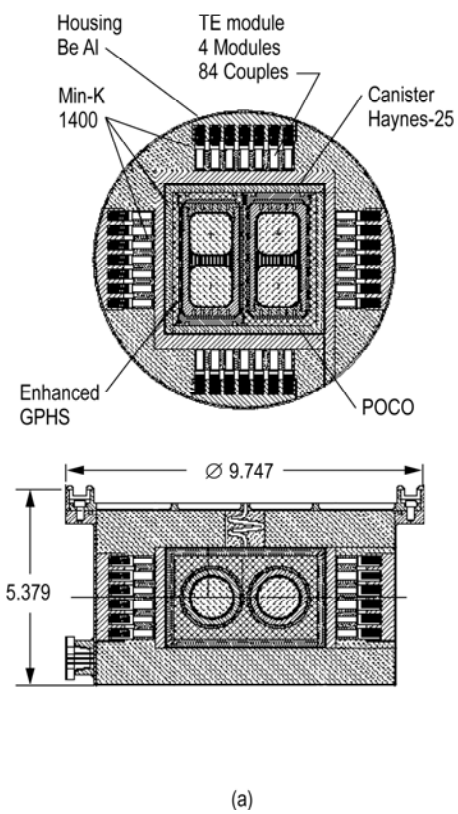

Current and Near Term Concept

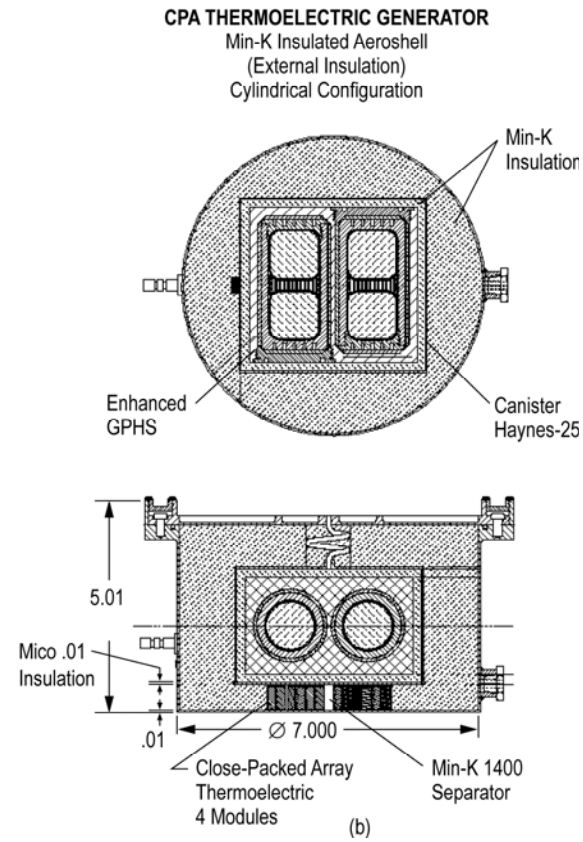

Far Term Concept

This information is pre-decisional and for discussion purposes only.

Potential Small-RPS Missions and Applications

This information is pre-decisional and for discussion purposes only.

Europa Lander Mission (ELM) Concept

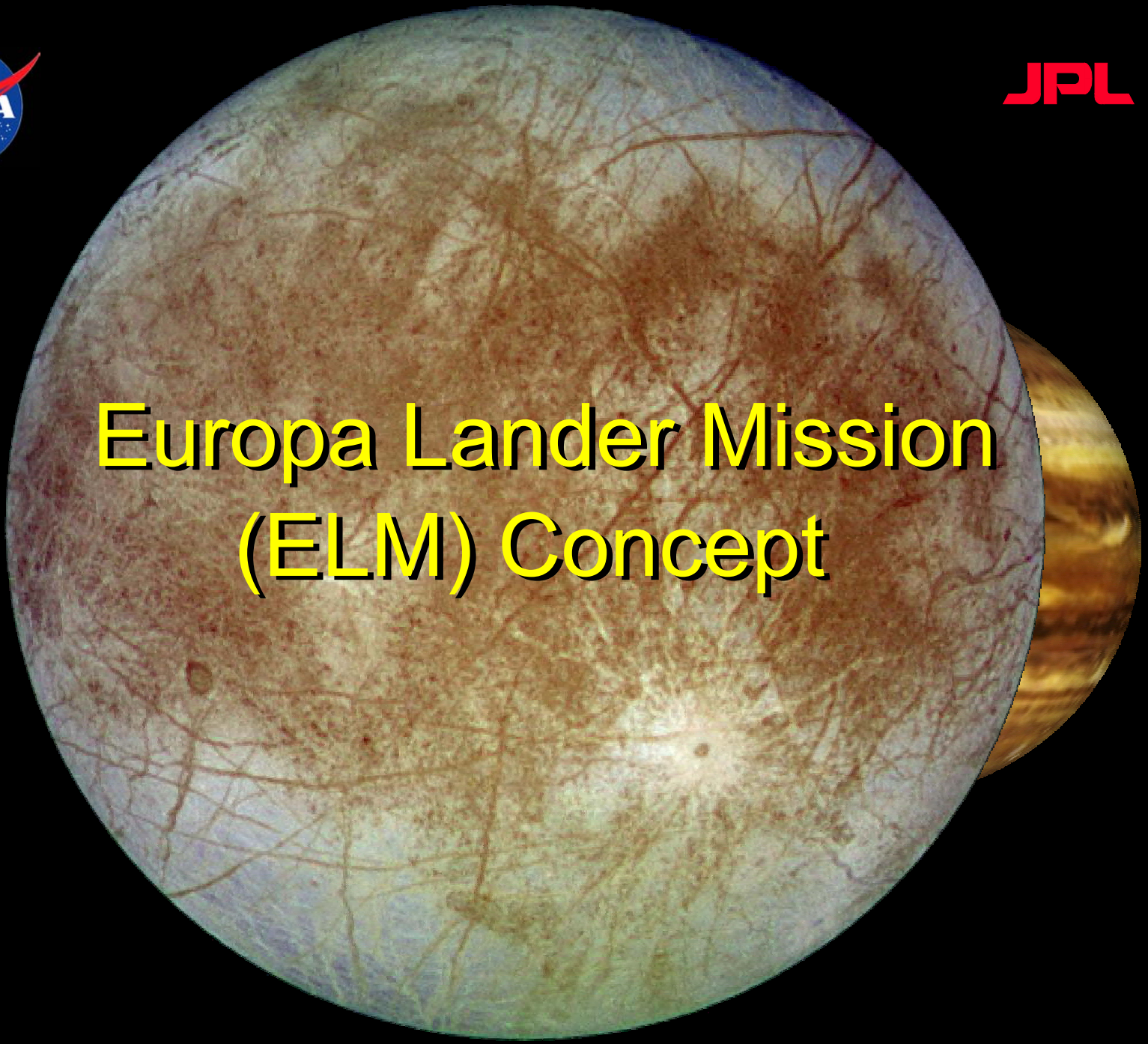

Why Europa?

Europa is the single highest-priority target for future flagship-class missions to the outer solar system.

Reference: Solar System Exploration Decadal Survey (National Research Council)

Why Land on Europa?

Because *life* may exist within Europa's icy crust or in a subsurface ocean.