Cryogenic Propulsion With Zero Boil-Off Storage

Applied To Outer Planetary Exploration

Carl S. Guernsey* and Raymond S. Baker†
Jet Propulsion Laboratory, Pasadena, CA 91109

David Plachta‡
NASA Glenn Research Center, Cleveland, OH 44135

and

Peter Kittel§
Consultant, Moffett Field, CA, 94035

This paper describes a study of the potential application of cryogenic propulsion systems using liquid oxygen and hydrogen propellants to planetary spacecraft. A conceptual liquid oxygen/ liquid hydrogen propulsion stage designs were developed. Mission-level assessments of the impacts of adopting cryogenic propulsion with the latest in zero boil off cryogenic storage techniques were made. Results are presented for the three missions studied: Titan Explorer, Mars Sample Return Earth Return Vehicle, and Comet Nucleus Sample Return. Thermal analysis results show that it is possible to store LOX/LH_2 at reasonable tank pressures using only passive radiation cooling when the field of view of propellant tanks can be kept clear of warm planetary bodies. This situation is typical of interplanetary cruise, spacecraft orbiting bodies with low effective blackbody temperatures, and spacecraft with very short stay times near the target planet, asteroid, or comet. Passive storage was accomplished using a combination of sun shades, spacecraft configuration considerations, spacecraft pointing constraints, and the low conductance Passive Orbit Displacement Strut (PODS). Actively cooled designs use cryocoolers and mechanically pumped fluid loops to reject heat from the propellant tanks. From the results of the mission studies performed in this study, it appears that the applicability of cryogenic propulsion (specifically pump-fed LOX / LH_2 systems) is limited for missions in the Discovery and New Frontiers class or for unmanned exploration of Mars. Significant benefits were found for missions that share the following two characteristics: 1) Very large ΔV requirements (over 3000 m/s) and 2) No requirement to store the propellants for an extended period in a low orbit about a planetary body. The large dry mass fraction of the cryogenic system, as conceived, reduced or outweighed the benefits from high Isp performance for missions with lower delta-V or which required active cooling.

* Principal Investigator, M/S 125-209B, Jet Propulsion Laboratory, 4800 Oack Grove Drive, Pasadena, CA 91109.
† Co-Investigator, M/S 125-211D, Jet Propulsion Laboratory, 4800 Oack Grove Drive, Pasadena, CA 91109.
‡ Co-Investigator, M/S86-2, NASA Glenn Research Center, 21000 Brookpark Rd., Cleveland, OH 44135
§ Co-Investigator, University Affiliated Research Center (UARC), University of California, M/S 244-10 NASA Ames Research Center, Moffett Field, 94035-1000

Nomenclature

α	=	Absorptivity
CAT	=	Cryogenic Analysis Tool
CNSR	=	Comet Nucleus Sample Return
ε	=	Emmisivity
ΔV	=	Change in Velocity
Isp	=	Specific Impulse
LOX	=	Liquid Oxygen
LH2	=	Liquid Hydrogen
MLI	=	Multi-Layer Insulation
MR	=	Mixture ratio
MSR-ERV	=	Mars Sample Return Earth Return Vehicle
Pc	=	Chamber pressure
PCA	=	Pressure Control Assembly
PIA	=	Propellant Isolation Assembly
PODS	=	Passive Orbit Disconnect Strut
RTG	=	Radioisotope Thermoelectric Generator
S/C	=	Spacecraft
SOA	=	State of the Art
SOFI	=	Spray on Foam Insulation
TAS	=	Thermal Analysis System
TDK	=	Two Dimensional Kinetics Program
TEx	=	Titan Explorer
ZBO	=	Zero Boil-Off

I. Introduction

This study was conducted to evaluate potential benefits of using pump-fed LOX / LH_2 propulsion systems for robotic planetary missions instead of State-of-the-Art pressure-fed storable bipropellant propulsion systems. Pressure-fed cryogenic propulsion systems were eliminated from consideration early in the study because of the very large dry mass penalty such systems would suffer due to the low density and temperature of the cryogenic propellants. The use of Zero Boil Off (ZBO) cryogenic storage, rather than systems which allow a portion of the propellant to vaporize to maintain tank pressures, was baselined. Both mission performance and cost impacts were considered.

The mission set focuses on missions for which cryogenic propulsion was most likely to show a significant benefit. Due to the exponential dependence of propellant requirement on ΔV, the missions selected all required a large ΔV. Other considerations for mission selection were whether they were considered within the scope of the In Space Propulsion (ISP) Program. At the present time very large "Flagship" missions which exceed the New Frontiers cost cap are not considered to be in the scope of ISP, with the exception of unmanned Mars missions. It was also considered important to be able to see the effects of power system architecture and mission thermal environment on the performance of cryogenic propulsion systems using ZBO. The missions selected for study were:

- Titan Explorer (TEx) – A spacecraft is carried into orbit around Saturn's moon Titan. This spacecraft carries a surface probe that is released prior to orbit insertion at Titan. Major maneuvers include a deep space maneuver, Saturn orbit insertion, and Titan orbit insertion.

- Mars Sample Return Earth Return Vehicle (MSR-ERV) – This spacecraft, launched independent of other MSR spacecraft elements, must enter orbit around Mars, locate and rendezvous with an orbiting sample container, and return the Mars sample to Earth. Major maneuvers include Mars orbit insertion, plane changes at Mars, and trans-Earth injection.

- Comet Nucleus Sample Return (CNSR) – This spacecraft rendezvous with a comet at approximately 5AU, collects a sample of the comet, and returns the sample to Earth. Major maneuvers include deep space targeting maneuvers, comet arrival, and comet departure.

A summary of some of the more significant aspects of these missions is given in Table 1.

Table 1. Comparison of Mission Applications.

TEx	MSR-ERV	CNSR
High ΔV (3833 m/s), Large Payload	High ΔV (5148 m/s), Large Payload	High ΔV (4446 m/s), Small Payload
Relatively 'Cold' thermal environment	Relatively 'Hot' thermal environment	Relatively 'Cold' thermal environment
RTG Powered	Solar Powered	Solar Powered
Flagship class	Flagship class (But in scope for ISP)	New Frontiers class

JPL's Team X was used to study each mission concept. Team X is an integrated concurrent engineering environment for the rapid conceptual design of spacecraft and space architectures. In addition, a parametric study was performed to evaluate the mass and cost of the CNSR mission with hypothetical ΔV requirements of 3000 m/s and 2000 m/s. This allowed some insight into the applicability of cryogenic propulsion to other lower-cost missions that might fall into the New Frontiers or Discovery class.

II. Spacecraft and Propulsion System Design Approach

Based on the concept missions, a set of typical propulsion system requirements was generated. They are:

- Perform major ΔV maneuvers, ΔV and propellant mass vary by mission
- 4 engine starts is typical
- Thrust and throughput requirements vary by mission, typically 500-2500N
- Provide thrust vector control via gimbaling of engine/nozzle
- Provide positive isolation of all propellants and pressurants per range safety payload requirements

The total power required for a turbopump is primarily determined by flowrate and total pressure rise.[1] Due to the low density of hydrogen, the LH_2 pump is the largest power consumer and primary driver of total pump power. The expander cycle requires a larger pressure rise from the LH_2 pump than the gas generator cycle in order to pump turbine exhaust into the combustion chamber. Gas generator power is typically 30% lower than expander cycle power at lower engine chamber pressures. As chamber pressure increases, the expander cycle power increases dramatically and reaches a maximum limit corresponding to the maximum amount of extractable enthalpy in the hydrogen entering the turbine. Consequently, a gas generator cycle was chosen for this study to allow the most flexibility. In addition to reduced pump requirements, the gas generator cycle decouples the pump drive (turbine or otherwise) from the overall system allowing other system trades, such as electrically driven

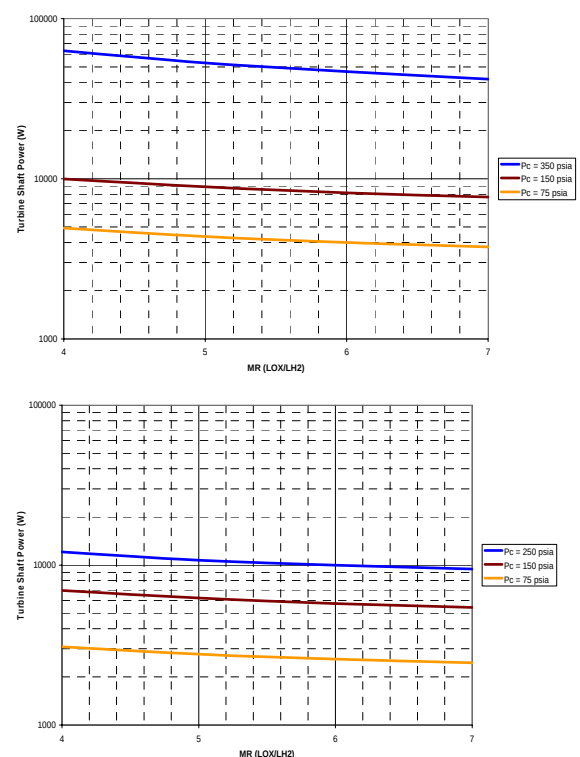

Figure 1. Pump power vs. mixture ratio and chamber pressure for an expander cycle (top) and a gas generator cycle (bottom).

pumps. Pump power vs. mixture ratio and chamber pressure are shown in Figure 1 for each cycle option.

High chamber pressures are desirable for maximum performance and reduced engine volume. However, the higher pressures impact the pump requirements and overall system performance, in a gas generator cycle where propellants are consumed to drive the pumps. Therefore, the effective system Isp, which accounts for pumping losses, must be used to optimize the system design point. Engine performance was calculated vs Pc and MR using the Two-Dimensional Kinetics (TDK) program.[2,3,4] The results from TDK were derated 2% and adjusted for pump losses.[5] Figure 2 shows the results. Peak system performance occurs between 150 and 500 psia at a mixture ratio of 5. For system studies an effective system Isp of 447 sec was used. A baseline chamber pressure of 150 psia was selected to minimize pump requirements. Chamber pressure was adjusted between 150 and 500 psia to achieve the minimum thrust levels and maximum engine volume requirements for each case study. A detailed trade of engine/pump system mass vs Pc was not performed.

Required thrust level was determined for each mission to minimize finite burn losses. Finite burn losses occur when performing a maneuver near a planetary body over a finite amount of time. Instead of providing the ΔV in an infinitesimally short impulse, as is assumed in basic orbital mechanics calculations, the ΔV of a real maneuver is spread out in time and in the orbit about the planetary body. Since this is less optimum, the total required ΔV goes up with burn time. This effect is only an issue when maneuver sweeps out a large angle about the body. For deep space maneuvers about the Sun, the total angle swept during the maneuver is very small and finite burn losses are negligible.

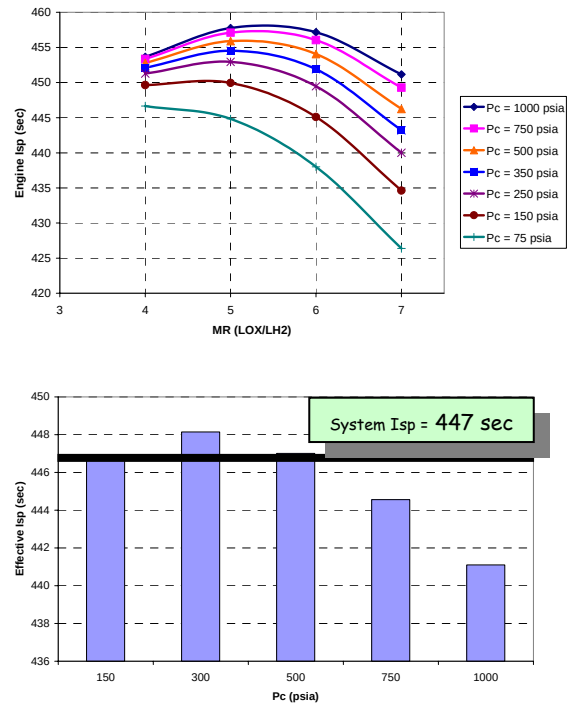

Figure 2. Engine Isp (top) and Effective System Isp (bottom) for various chamber pressures.

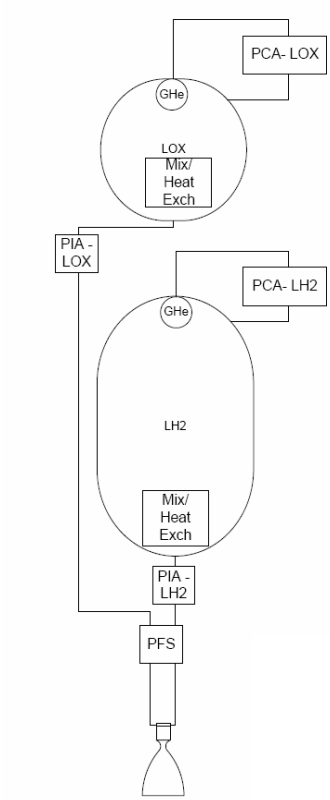

Figure 3. Propulsion System Concept Block Diagram.

A baseline propulsion system schematic was generated based on a single LH_2 and single LOX tank stage and is shown in Figure 3. Each tank is pressurized with a separate Pressure Control Assembly (PCA) and helium tank. The tanks are systems in their own right and contain a propellant management device, mixer, and heat exchanger internally and various types of insulation and coating on the outside. The Propellant Isolation Assemblies (PIA) provide leak tight isolation of the propellants, filtration, and load/unload capability. The engine/pump system includes the engine, pumps, gas generator, and fluid management for these systems.

Several spacecraft configuration options were considered in the course of this study. The goal of the configuration was to maximize the propellant tanks' view to space while minimizing the following: system interfaces, conductive heat loads to the tanks (especially the LH_2 tank), radiated heat loads from the Sun, nearby planets, and the spacecraft bus, and to minimize the structural load requirements on the LH_2 tank.

The baseline configuration is shown in Figure 4. It is

launched as shown in the inverted position and uses a single set of tanks and a side mounted entry vehicle. This design minimizes the structural requirements on the LH_2 tank by placing it and the engine system at the top of the stack. By using a single LOX tank in line with the LH_2 tank, the LH_2 tank's view to space is maximized. This design allows for relatively straight forward shielding and isolation of the tanks from spacecraft thermal loads. It also provides access to the spacecraft bus and RTGs from the standard payload fairing doors. This configuration effectively decouples the propulsion stage design from the spacecraft bus design (for the most part), allowing this configuration to be used as a starting point for other studies.

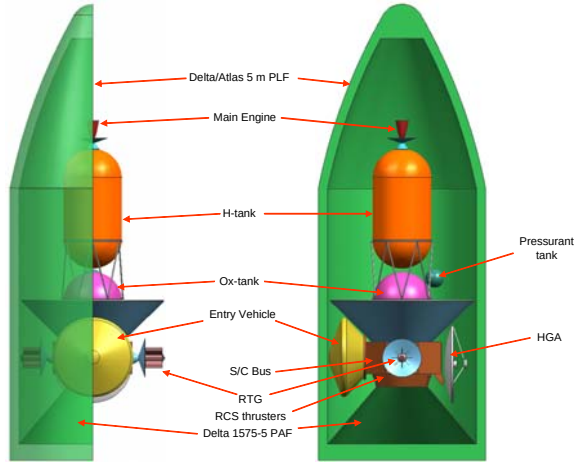

Figure 4. Baseline Spacecraft Configuration (TEx shown).

A thermal shield was added between the tanks and the bus to shield the tanks from the Sun and the spacecraft bus under normal operation. The structure supporting the tanks consists of gamma-alumina bipod struts using the passive orbit disconnect strut (PODS) end fittings to minimize the thermal loads after launch (see section III). Gamma alumina was assumed based on to maintain heritage with the Gravity Probe B helium dewar supports. However other matierals may be more optimal for LH_2 supports. The spacecraft normal pointing mode is aligned with the Sun vector such that the tanks are shaded. This design can tolerate short durations of time with the Sun directly in the field of view of the tanks for maneuvers, communications, and safe-mode events.

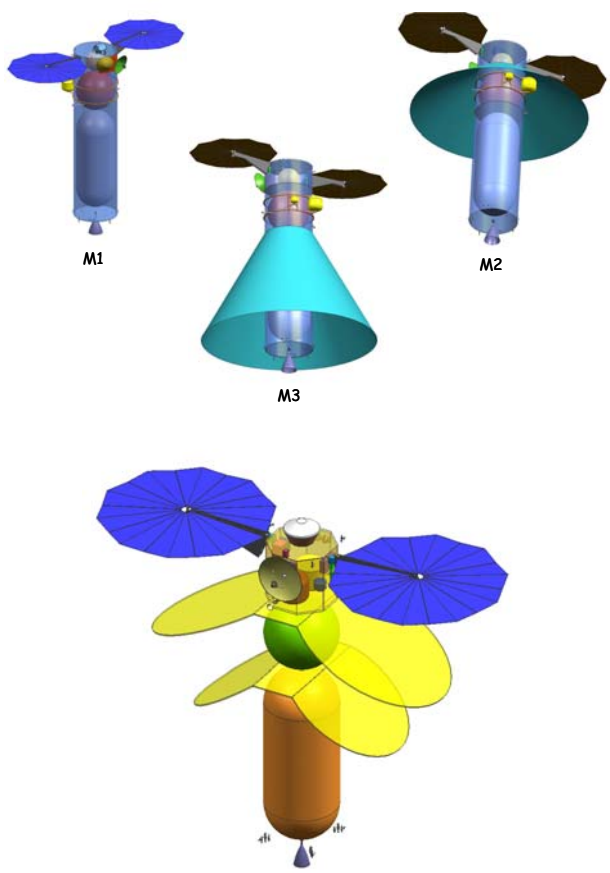

Figure 5. Spacecraft Configurations for MSR-ERV (above) and CNSR (below).

Figure 5 shows the configurations used for the MSR-ERV spacecraft options and the CNSR spacecraft. Both spacecraft are solar powered and have different thermal requirements, assumptions about the environment, and constraints on the spacecraft attitude. The main difference among the configurations are the shade geometry used. For instance, MSR-ERV option M1 uses no shades and assumes no attitude constraints. Option M3 uses a long shade and constrains the spacecraft attitude such that the tanks are always shaded from both the Sun and Mars. The CNSR spacecraft spends most of its mission in interplanetary cruise, away from planetary bodies. Its shade was designed to shade the tanks from the Sun and the solar arrays.

III. Thermal Design and Analysis

Zero Boil-Off Cryogenic Propellant Systems analysis was performed for this study using several different analysis tools. Thermal loads from environmental conditions were calculated using Thermal Analysis System (TAS), which uses a finite difference solution to solve complex, nonlinear models with temperature dependent properties. The thermal loads generated from TAS were used as inputs to the Cryogenic Analysis Tool (CAT). In turn CAT determined the time dependent fluid conditions of the propellants over the entire mission life. CAT was used to ensure the specific ZBO design did not overpressure the propellant tanks during the mission. Figure 6 shows the relationship between

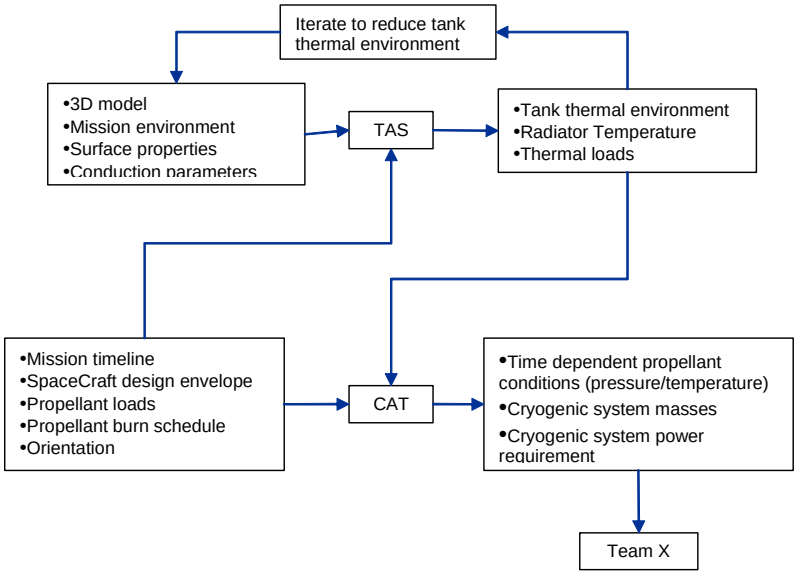

Figure 6. ZBO Thermal Analysis Methodology.

the different analysis routines.

Thermal models of a Zero Boil Off (ZBO) Cryogenic Propellant Systems are shown in Figures 7 - 9. Initially, the general configuration for all the systems was to provide MLI insulation for the LOX and LH2 tanks, and shades to shield the propellant tanks from solar or planetary albedo, planetary infrared radiation, or hot areas of the spacecraft. Initial configurations were iterated upon to minimize the heat going into the propellant, while not substantially increasing the ZBO system mass. These initial configurations and resulting designs were modified in the process of analyzing each system based on specific environments for each spacecraft. While shades and multilayer insulation (MLI) were effective in reducing the heat leak, other significant heat leak sources still existed, such as conduction though the support structure (struts) and radiation from the liquid oxygen (LOX) tank to the liquid hydrogen (LH2) tank. Although the magnitude of the heat leaks were only a few tenths of a watt, these were significant because 20K cryocoolers of this size have very low Carnot and mechanical efficiency, 10% and 2% respectively. Typically it would take 50W of electrical power to remove 0.1W of heat. It became apparent that reducing heat leaks by even fractions of a watt would have significant impact on the mass of cryocooler systems and consequently the entire spacecraft.

The model included obstructions that block the view to space, such as struts, thruster, other tanks, and miscellaneous objects. These obstructions have a low emissivity and only radiate inwards towards the spacecraft. The avionics section of the S/C Bus was fixed at 250K (based on JPL experience). In order to reduce the power requirement to maintain this temperature, the absorptivity of the Axial End Shields shown in Figure 7 could be increased. In typical application, the power dissipated by the spacecraft avionics maintains this temperature.

To reduce inter-tank infrared radiation, an Inter-Tank Shield was added. The shields or shades used are 20 layer MLI blankets, over an undefined structural frame and have a cone shape to behave like a "V" groove radiator. The shields used were modeled with an effective emissivity of 0.004, which is a conservative value. In comparison, the James Webb telescope has a shield with an effective emissivity of 0.00038. Still, this .004 shield was effective in reducing the inter-tank heat

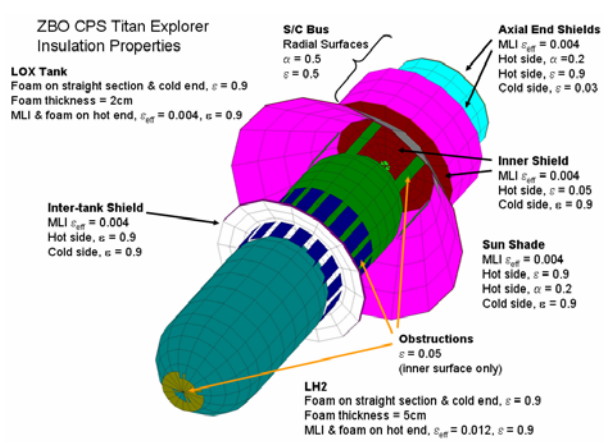

Figure 7. Thermal model of the Tex propulsion stage.

leak. An optimal emissivity was not searched for and it is not known if the James Webb design would have helped significantly. There is also an Inner Shield which protects the end of LOX tank from the 250K spacecraft bus.

Surface properties for absorptivity and emissivity were researched and selected as shown in Figures 7 and 9. The values used are consistent with those used by JPL in the Team X environment, which is based on years of experience in developing and flying actual spacecraft. In some cases, these values may be conservative. Our primary concerns are whether or not coatings with high emissivities change below 100K, and whether the absorptivity degrades when exposed to the Solar wind environment.

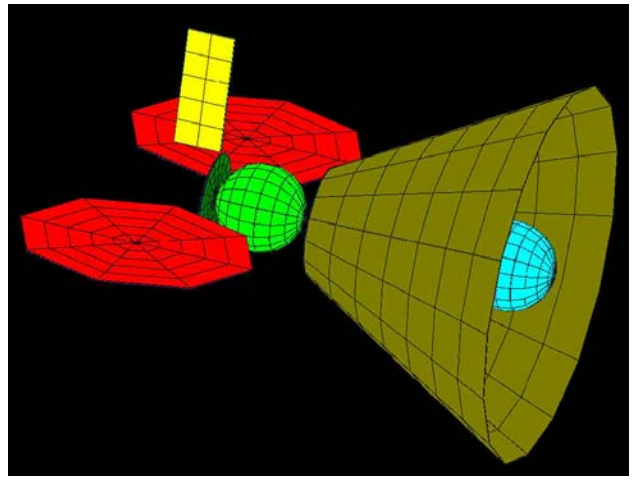

Figure 8. Thermal model of the MSR-ERV spacecraft with long tank shade.

In order to reduce the radiation exchange between components, the exterior surfaces of the shield were initially modeled with a low emissivity, but direct solar insulation could result in excessively high temperatures and damage the material. Therefore the emissivities were changed to 0.9 and a sensitivity analysis showed little change in the overall heat leak. The surface of the Sun Shade that is exposed to direct solar insolation has a solar absorptivity of 0.2. This value can be achieved by using a solar reflector material such as a second surface mirror made with metalized Teflon® which has been used extensively and successfully on the Hubble Space Telescope. The values used are similar to those published in the Sheldahl Red Book.[6] Sheldahl shows that for 5 mil thick metalized Teflon the absorptivity (α) is less-than 0.09 and the emissivity (ε) is greater-than 0.75, for 10 mil thick material these are $\alpha < 0.10$ and $\varepsilon > 0.85$, respectively. Although the published value for absorptivity is lower than what was used in this analysis, higher values were used to account for material degradation and contamination.

Spray on foam insulation (SOFI) was used to reduce the boil-off rate during ground hold. By having a layer of foam, the MLI can be purged with dry nitrogen instead of helium. This eliminates the need for a purge bag and since the conductivity of nitrogen is 1/6th that of helium, the heat transfer coefficient is reduced. The down side of foam is that it has no benefit after the vehicle is launched. Although the ground launch tanking requirements were not known, we simply assumed that we would use enough foam to ensure we were below the dew point of dry nitrogen. Using analysis done by Eberhardt, et al,[7] we chose 1.8 cm of foam and an identical thickness was derived by Kramer, et al.[8] for Geosynchronous payloads. This reduces the ground hold boil-off rates from 12% per hour to 1.2% per hour, which could be significant if there are limitations on the propellant tanking access as the launch countdown approaches lift-off. The MHTB test used a foam thickness of 3.2 cm but pointed out that only 1.4 cm would be needed in an actual application. But their reasoning was different; they only considered the liquefaction temperature of nitrogen and not the moisture dew point.

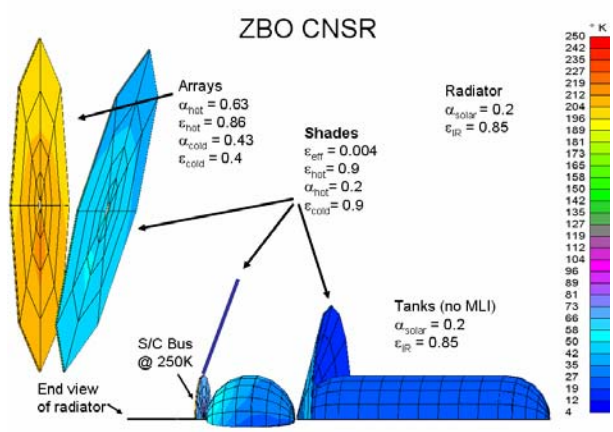

Figure 9. Thermal model of CNSR propulsion stage.

The support structure for the tanks is a major source of heat leak. The struts were initially assumed to be typical state-of-the-art (SOA) design which is basically a cylindrical tube made of a composite material such as fiberglass/epoxy or γ-alumina/epoxy. In the 20K to 100K range T300/epoxy is the lowest conductivity candidate and G10 is better in the 100K to 250K range.[9] A detailed comparison, which requires consideration of material mechanical properties to size strut cross sectional area, has not been done for these materials for these applications as part of this study.

When using the SOA design on the Titan Explorer, it was found that the 12 struts between the LOX and LH_2 tanks would leak about 0.2W. Although the magnitude of this heat leak is low, this is significant because 20K cryocoolers of this size have very low Carnot and mechanical efficiency, 10% and 2% respectively. Thus, 0.2W of heat leak would require 100W of power. Therefore it was decided to incorporate PODS. A schematic of a PODS is sketched in Figure 10. When in space the heat path is through the small diameter composite tube, a longer path which also has a much smaller cross-section area than the load bearing end housing. During launch the load path is though a shorter, stronger path with a much larger cross-sectional area. By using the PODS the heat leak can easily be reduced to 1/10th of that of the SOA struts.[10] PODS were used on the Gravity Probe-B Program, which launch in April, 2004, and may be used on many other missions.[11] Note that PODS greatly reduce the orbital natural frequency of the structure. Therefore before choosing PODS as a support method, structural and flight control analyses need to be performed to verify that they can be safely used with the spacecraft system in question. Reduced on-orbit stiffness can impact attitude slew rate and settling times following altitude changes.

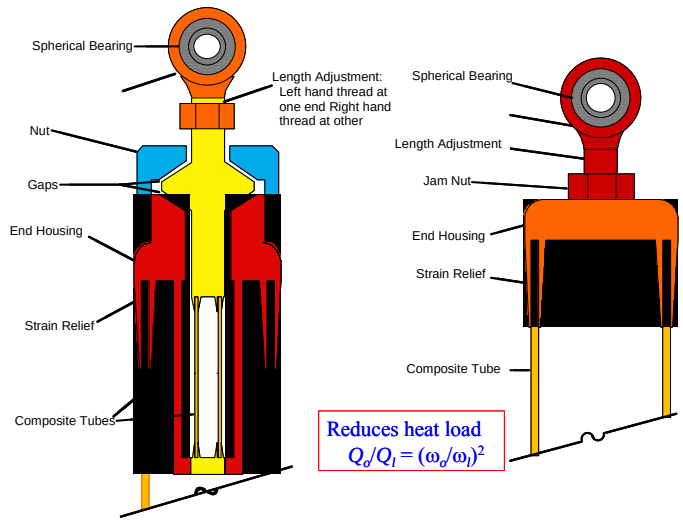

Figure 10. Passive Orbit Disconnect Strut Schematic.

Given this thermal design and the results of the thermal modeling, the CAT can predict the change in fluid temperature and pressure for the tank system as a function of time. When the net heat leak is greater than the heat removed by the cryocooler, propellant temperature and pressure increases, accompanied by a slight decrease in liquid mass in the tank (even though there is no venting). When the net heat leak is less than the heat removed by the cryocooler, propellant temperature and pressure decreases and liquid mass increases (from condensate). Fluid conditions are calculated on a daily basis. These new fluid conditions are used as initial conditions for the following day. Fluid properties in the CAT are based on gaspak.exe – a fluid property program derived from NIST data.

To run CAT, a steady state cryocooler input power was calculated (if any was required) and then fluid conditions were determined. This was iterated until tank pressure limits were optimally achieved. For a given propellant load, mission time line and propellant burn schedule, CAT has the ability to turn on and off the cryocoolers, turn on and off a tank heater and add gaseous helium pressurant gas. This is necessary to ensure the fluid conditions are updated properly with respect to the mission operational parameters. From the thermal and fluid calculations, component designs such as the mixer, tank, tank supports, penetrations, insulation, cryocooler integration, cryocooler, cryocooler controller, and the radiator are performed in CAT. These designs determine their mass, volume, areas, and power requirements, which are then fed into the Team X mission environment.

IV. Mission Study Results

The key findings of each of the system trade studies are summarized in Table 2. Perhaps one of the most significant findings was that for missions that are not required to perform major propulsive maneuvers after long periods in low orbit around planetary bodies it is possible store to the LOX/ LH_2 passively, without active cryo-coolers. This would greatly reduce the cost, complexity, and risk associated with using cryogenic propulsion on such missions. This result was obtained during the Titan Explorer missions study. That mission study evolved a configuration architecture that maximized the propellant tanks' view to deep space while minimizing heat loads from the spacecraft bus. That configuration is illustrated in Figure 7. Transient studies showed that this design could tolerate 24 hours off of the desired orientation (with the propellant tanks shaded from the sun) with negligible tank pressure increase. In addition to configuration and spacecraft pointing constraints, passive storage was enabled by a unique combination of sun shades, inter-tank radiation shields, low conductivity Passive On-orbit Disconnect Struts (PODS), optimized insulation arrangements, and optimal surface properties.

The TEx study also showed that if passive storage were not possible, there would be a major power system mass increase to operate cryocoolers. This is due to the low specific mass of Radioisotope Thermoelectric Generators

(RTGs). With passive cooling, it was found that cryogenic propulsion could offer significant reductions in launch mass compared with SOA propulsion systems. However, no option was found which would allow the TEx mission, as defined for this study, to fit on an existing launch vehicle.

Table 2. Mission Study Significant Results.

Titan Explorer	• Passive storage of LOX / LH_2 is possible • Low specific power of RTGs would severely penalize active cooling schemes • Cryo propulsion with passive storage came closest to fitting on a launch vehicle of the options studied, with significant mass reduction compared to SOA
MSR Earth Return Vehicle	• Active cryocooling required because of long period in low Mars orbit • It is possible to perform this mission with a single-stage propulsion system using cryogenic propulsion, but not with single-stage SOA • Mass margin can be increased and money can be saved by using a two-stage SOA propulsion system rather than single stage cryogenic propulsion
Comet Nucleus Sample Return	• Passive storage of LOX / LH_2 possible • Use of cryogenic propulsion allows the use of a smaller launch vehicle and yields a net cost saving
CNSR with Reduced ΔV	• For ΔVs below about 3000 m/s the use of cryogenic propulsion results in no system benefit • At 2000 m/s ΔV cryogenic propulsion would produce both higher costs and increased mass than SOA

The Mars Sample Return Earth Return Vehicle study was an example of a mission for which passive cooling of the cryogenic propulsion system was not found to be possible due to the long period spent in low Mars orbit retrieving an orbiting sample containing samples of Martian rock and regolith. Trying to simultaneously shade the tanks from the sun and the planet's albedo and IR load proved formidable and several configurations were investigated to try to reduce the power required for active cooling. The best of these configurations is shown in Figure 5 (Option M3). A conical radiation shade was used to minimize heating of the propellant tanks and the planet while still allowing the tanks to radiate to space. Spacecraft attitude was constrained were except for short periods during sample retrieval.

Figure 11 shows the results of the MSR-ERV study in terms of launch mass and projected project cost. Three options using SOA propulsion systems were considered. A single stage bipropellant system using conventional storable propellants (in the lower right corner of Figure 11) has the lowest cost, but is far heavier than the capability of the largest existing launch vehicle. An option combining a solid for orbit insertion with a storable bipropellant system for Earth return almost, but not quite, meets the launch mass requirement. Finally, a two-stage SOA bipropellant system was found to provide significant launch vehicle margin.

Three configurations of the cryogenic propulsion system design are also shown in Figure 11, labeled M1, M2, and M3. M3 was the best configuration from a performance standpoint. It was also the only single-stage option that fit on an existing launch vehicle. However, the cost of the cryogenic system exceeded that of the two-stage SOA bipropellant system by approximately $ 50 M while providing less launch mass margin. In fact, the cost difference would be expected to be larger than this when the costs of qualifying and producing flight cryocoolers and other ZBO hardware are included. Estimates of those costs were not available at the time of the study. However, costs for qualification of the cryogenic propulsion hardware were included.

The conclusion to be drawn from Figure 11 is that cryogenic propulsion, as defined in this study, does not appear to provide benefits for this class of mission. However, a number of options could be considered which might change this conclusion. One would be to redesign the mission to minimize the time spent in low Mars orbit in order to reduce the thermal load on the cryogenic propellant tanks. In combination with a different design approach that permits a non-steady state ZBO solution might give significant mass savings on the cryogenic storage systems. Another option would be to abandon the purely zero boil-off approach and allow some venting during the period in

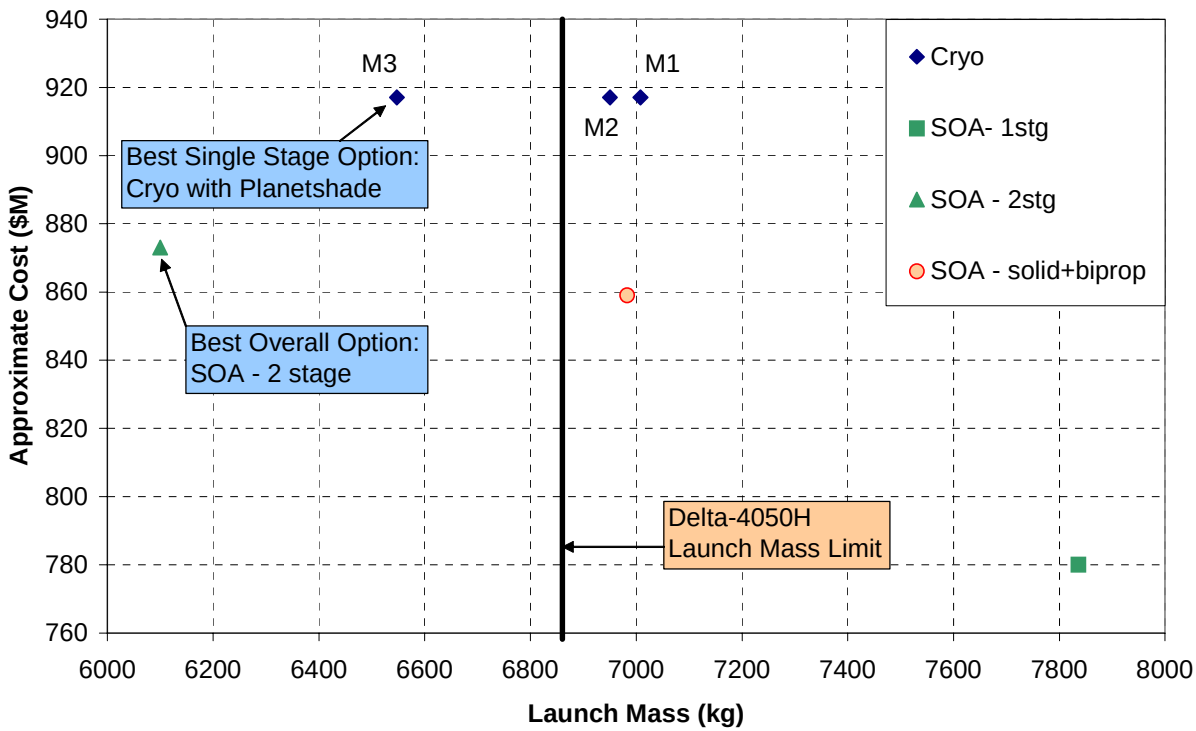

Figure 11. MSR-ERV Results: Approximate Mission Cost vs. Launch Mass.

low Mars orbit. This would result in some loss of usable propellant, but might reduce or eliminate the need for active cooling. These and other potential options were beyond the scope of the current study.

The Comet Nucleus Sample Return study revealed some additional aspects of the applicability of cryogenic propulsion to robotic planetary missions. This is illustrated in the mass vs. cost data shown in Figure 12. The CNSR mission has a very large ΔV requirement of 4446 m/s and while it is possible to launch such a mission on an existing launch vehicle using SOA propulsion (Point C1 in Figure 12) it comes at very high cost. Point C2 on Figure 12 shows the impact of applying cryogenic propulsion to this mission: the mission cost is actually reduced by allowing the use of a much less expensive launch vehicle. It was found this mission could be done using a passively cooled ZBO system, so the ZBO subsystem costs, which are not included in this cost estimate, are relatively insignificant.

Figure 12 also shows the parametric effect of mission ΔV on the mass and cost of the cryogenic propulsion system. Point C3 shows the impact of flying the same spacecraft on a hypothetical mission with a total ΔV of 3000 m/s, and point C4 shows the results for a hypothetical mission with a ΔV of 2000 m/s. Cost savings occur because of the ability to use progressively smaller launch vehicles, but they are minor since the big savings in launch vehicle costs comes when the mission is able to come down from the very largest launch systems. Finally, point C5 on Figure 12 shows the mass and cost of a hypothetical 2000 m/s mission using SOA propulsion. At this lower ΔV, the additional dry weight needed to implement the cryogenic system actually outweighs the specific impulse advantage, leading the cryogenic system to be slightly heavier, and substantially more expensive, than the SOA propulsion system.

From the results of the mission studies performed in this study, it appears that the applicability of cryogenic propulsion (specifically pump-fed LOX / LH2 systems) is limited for missions in the Discovery and New Frontiers class or for unmanned exploration of Mars. We have studied some of the more propulsively demanding of these missions and have seen significant benefits only for missions that share two characteristics:

1. Very large ΔV requirements (over 3000 m/s)
2. No requirement to store the propellants for an extended period in a low orbit about a planetary body.

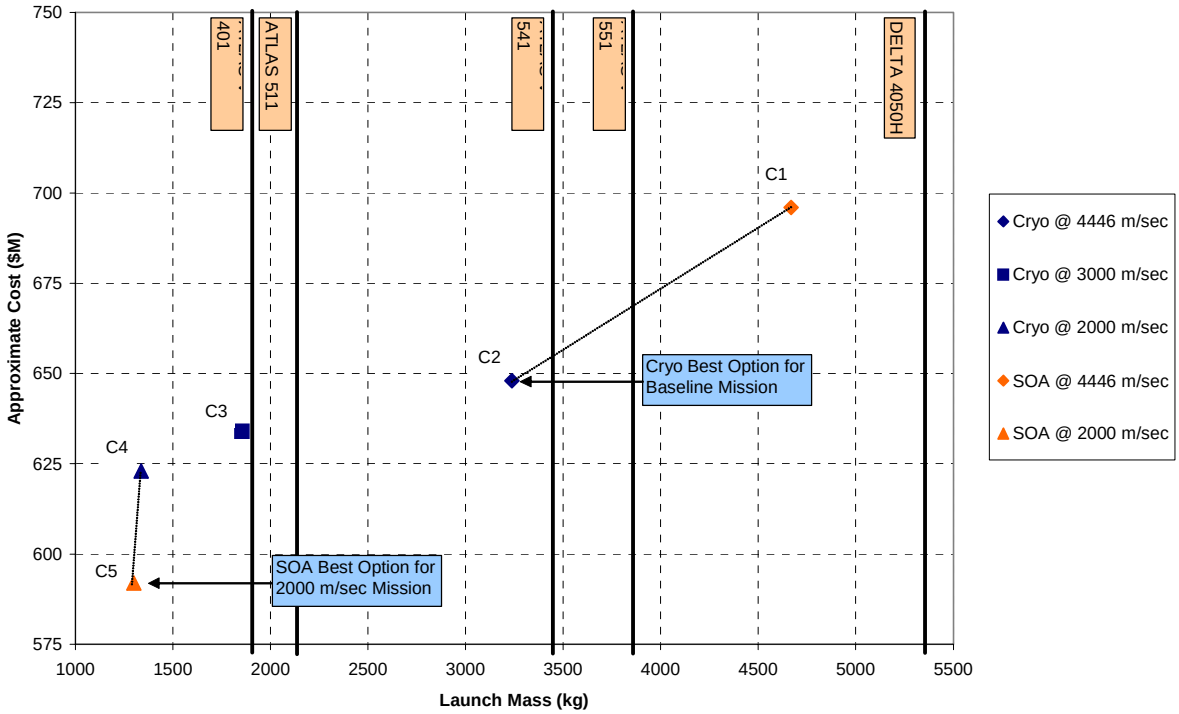

Figure 12. CNSR Results: Approximate Mission Cost vs. Launch Mass.

It can reasonably argued that the second condition can be removed by permitting some level of boil-off or improvements in ZBO technology, but the restriction to high ΔV missions is likely to stand. A relatively small number of "non flagship" missions studied at JPL in recent years have these characteristics.

Indeed, in the majority of mission studies and proposal efforts the trend for propulsion system selection has become increasingly focused on minimizing cost and development risk. For example, it is for those reasons that Mars Reconnaissance Orbiter (MRO), to be launched this year, uses a monopropellant propulsion system instead of a better performing, but more expensive, bipropellant system. Similarly, Mars Telecommunications Orbiter (MTO) is currently considering a monopropellant propulsion system for a mission with a ΔV approaching 1700 m/s. In general, it can be stated that infusion of new propulsion technologies into new missions occurs only if it is needed to technically enable the mission or if relatively large cost savings can be obtained. Examples of both categories can be inferred from the results of this study:

- The Titan Explorer study was very nearly an example of a mission that might be enabled by the use of cryogenic propulsion. Using a single-stage SOA propulsion system it could not fit on any existing launch vehicle, while the results for a cryogenic system very nearly did so. It is possible to envision a mission for which this would be possible. However, once such a mission was identified, there would no doubt be a significant effort to avoid this technology infusion by redesigning the mission, using staged SOA systems, or other options. If these efforts proved unsuccessful, the use of cryogenic propulsion would be considered. The cost and perceived risk of this technology infusion would likely be an impediment to approval of the mission.

- The results of the CNSR study provide an example of a mission that could save significant amounts of money by using cryogenic propulsion. This is primarily because the baseline SOA system requires the use of the largest launch vehicle available and going down in launch vehicle size saves significant sums. However, the parametric study on ΔV for that mission shows that this is a phenomenon common to only the largest (and likely most expensive) missions. This is illustrated in Figure 13, which shows that the largest savings occur if a mission is able to go down from a Delta IV 4050H to a smaller launch vehicle; savings from further reductions in launch mass are more incremental in nature.

It must be noted that this study does not allow one to draw similar conclusions about the mission applicability of cryogenic propulsion far outside of the domain of currently foreseen robotic missions. Very large systems of the scale required for human planetary exploration might well reap benefits not reflected in the present results. In fact, there is a clear trend, as expected, that cryogenic systems excel in high ΔV applications where system Isp is far more important than system dry mass. Also, systems with moderate ΔV but very large propellant mass may realize a net performance gain from the cryogenic system. Those applications are beyond the scope of this study and the In Space Propulsion Program.

.

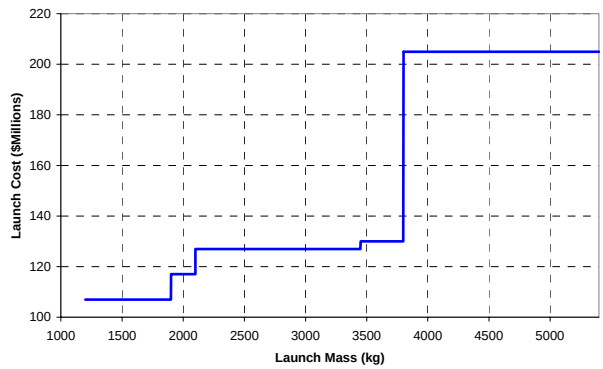

Figure 13. Approximate Launch Cost vs. Launch Mass for the CNSR mission.

V. Conclusions

This study has focused on the application of cryogenic propulsion with zero boil-off cryogenic storage using LOX and LH2 propellants and pump fed engines to robotic science missions. Some general conclusions of this study are that:

- Passive storage of LOX and LH2 propellants with zero boil-off is possible except when they must be stored for long periods in low orbit about a planetary body.
- Pump-fed cryogenic propulsion systems can produce significant mass and cost savings for some missions.
- The NASA Science Mission Directorate mission applicability of these technologies is limited, with significant benefits accruing to the largest (and generally most expensive) missions.

There are a number of facets of this technology which are recommended for further study to vet the results of this study before proceeding with large-scale advanced developments:

- A much more detailed study of the design of a reference cryogenic propulsion system needs to be performed to better define the interactions between engine cycle, pressurization system design, and propellant thermal control. This study should become an ongoing effort, incorporating information gained from the individual development programs into an ever more refined system design.
- The ground handling methods for loading the cryogenic tanks and maintaining them full during a possible ground hold require further study.
- More detailed design studies need to be developed for pump-fed cryogenic rocket engines in this size class, evaluating all potential engine cycles in more detail.
- More detailed design studies of the cryogenic propellant tanks are needed, with attention to propellant management and liquid acquisition as well as mixing requirements.

VI. Acknowledgements

This work was funded in part through University Affiliated Research Center (UARC) Subcontract P0228861. The UARC is managed by the University of California, Santa Cruz under NASA Ames Research Center Contract NAS2-03144.

VII. References

[1]Humble R., Henry G., Larson W, Space Propulsion Analysis and Design, The McGraw-Hill Companies, 1995.

[2]Dunn, S. and Coats, D., "Nozzle Performance Predictions Using the TDK 97 Code," AIAA Paper 97-2807, AIAA/ASME/SAE/ASEE Joint Propulsion Conference and Exhibit, 33rd, Seattle, WA, July 6-9, 1997.

[3]Dunn, S., Coats, D., and Nickerson, G., TDK97, "Two-Dimensional Kinetics (TDK) Nozzle Performance Computer Program, User's Manual", Software & Engineering Associates, Inc., NAS8-39048, Carson City, NV, January 1998.

[4]Gordon, S. and McBride, B., Computer Program for Calculation of Complex Chemical Equilibrium Compositions and Applications. Part 1: Analysis, NASA Center for AeroSpace Information, NASA-RP-1311, Hanover, MD, 1994.

[5]"Low Thrust Chemical Propulsion Pump Technology", NASA CR-165210

[6]Sheldahl Red Book, Aerospace Thermal Control Materials and Films, July 2003

[7]R. Eberhardt, et al, Shuttle Compatible Cryogenic Liquid Storage and Supply Systems, AIAA-81-1509, SAE, and ASME, Joint Propulsion Conference, 17th, Colorado Springs, CO, July 27-29, 1981, AIAA 16 p.

[8]T. Kramer, E. Brogren and B. Siegel, "Evaluation of Propellant Tank Insulation Concepts for Low-Thrust Chemical Propulsion Systems", NASA CR-168320, Boeing Aerospace, 1984

[9]R. Ross, Estimation of thermal conduction loads for structural supports of cryogenic spacecraft assemblies, Cryogenics, v 44, n 6-8, June/August, 2004, 2003 Space Cryogenics Workshop, p 421-424

[10]I. Spradley & R. Parmley, Design and Test of a Modified Passive Orbital Disconnect Strut (PODS-IV), Adv. Cryo. Engin. 33 (Plenum, New York, 1988) p. 935.

[11]R. Parmley, S. Katz, & I. Spradley, "Test and Evaluate Passive Orbital Disconnect Struts (PODS-III)", NASA CR 177368, August 1985