Searching for Subsurface Lunar Water Ice Using a Small RPS-Powered Rover

Space Technology and Applications International Forum
(STAIF-2005)

13 February 2005
Albuquerque, NM

J. Randolph , R. Abelson , K. Oxnevad , J. Shirley
Jet Propulsion Laboratory

Small-RPS Powered Lunar Rover Mission

This is a conceptual mission study intended to demonstrate the range of possible missions and applications that could be enabled were a new generation of Small Radioisotope Power Systems to be developed by NASA and DOE. While such systems are currently being considered by NASA and DOE, they do not currently exist.

This study is one of several small RPS-enabled mission concepts that were studied and presented in the NASA/JPL document "Enabling Exploration with Small Radioisotope Power Systems" available at:

http://solarsystem.nasa.gov/multimedia/download-detail.cfm?DL_ID=82

This information is pre-decisional and for discussion purposes only.

Agenda

- Science Rationale
- Mission Architecture Overview and Assumptions
- Power System Trade Study
- RPS Characteristics and Power System Requirements
- Science Instruments
- System Characteristics
- Summary and Conclusions

This information is pre-decisional and for discussion purposes only.

Acknowledgements

Knut I Oxnevad –NPDT Lead
Luther Beegle- Sci/Instruments
Greg Mungas - Sci/Instruments
David Hansen - Telecom
Keith Warfield - Systems
Robert Carnright - Orbital and Environment
Raymond Ellyin - Logistics
Gail Watson-Ashe - Logistics
William D. Strauss - Trajectory/Mission
Timothy.Y.Ho - Mechanical
Guillermo Olarte - Mechanical
Randel A Lindemann - Mechanical Consultant
Cesar Sepulveda - Optical
Thomas I Valdez - Power
John A Rohr - Avionics
Eug-Yun Kwack - Thermal
Michael D Henry - Avionics
Robert Haw - Trajectory/Mission
Daniel A Nigg - System

Vincent Randolph - Avionics Consultant
Tibor Balint - Consultant
Eric Wood - MMPAT Consultant
Salvador Distefano - Power Consultant

This information is pre-decisional and for discussion purposes only.

Why the Moon?

Exploring the Moon will help us determine:

1) Whether water ice exists on or near the surface, possibly enabling long-term human presence – Primary Goal.

2) What processes marked the initial stages of planet and satellite formation.

3) How the processes that shaped the contemporary character of planetary bodies operate and interact.

Presidential Vision for Space Exploration **(1)**

Solar System Exploration Decadal Survey (2, 3)
(National Research Council)

Mission Objectives

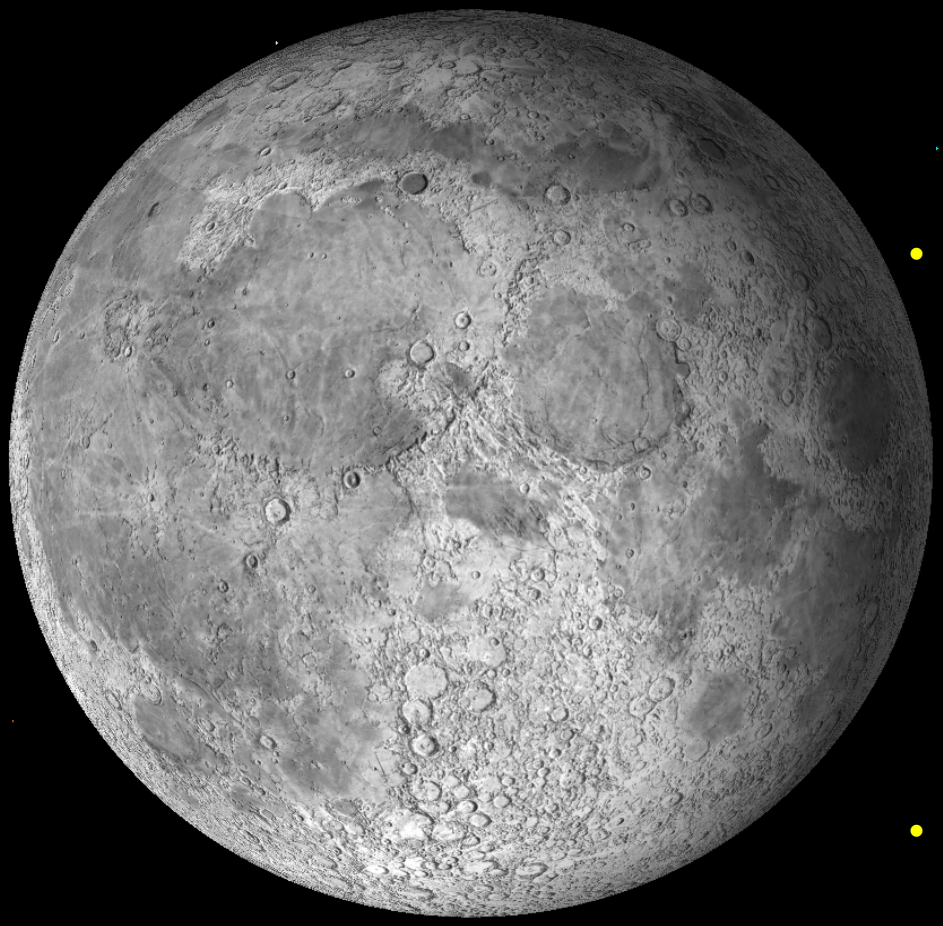

- **Support the goals of the *Presidential Vision for Space Exploration* and the *Decadal Survey*.**
- **Land a rover in the Peary-B Crater near the North Pole.**
  - Poles offers the greatest possibility of water-ice.
  - Peary-B crater is near permanently-sunlit highlands that could be used by astronauts as a permanent base.
- **Perform in-situ measurements that meet the scientific objectives.**

Mission Architecture Overview

- The Lunar rover would be landed in the Peary-B crater to search for water ice and perform high-priority mineralogy and surface science measurements
- The nominal mission duration would be 4 years.
- The rover would operate continuously throughout the entire mission.
- The rover would be capable of traversing a minimum of 20km over the mission lifetime.
- The rover would communicate using a relay satellite – will not see Earth directly within the crater.
- The Lunar rover would serve as a human precursor mission and could provide reconnaissance data for future sample return missions.

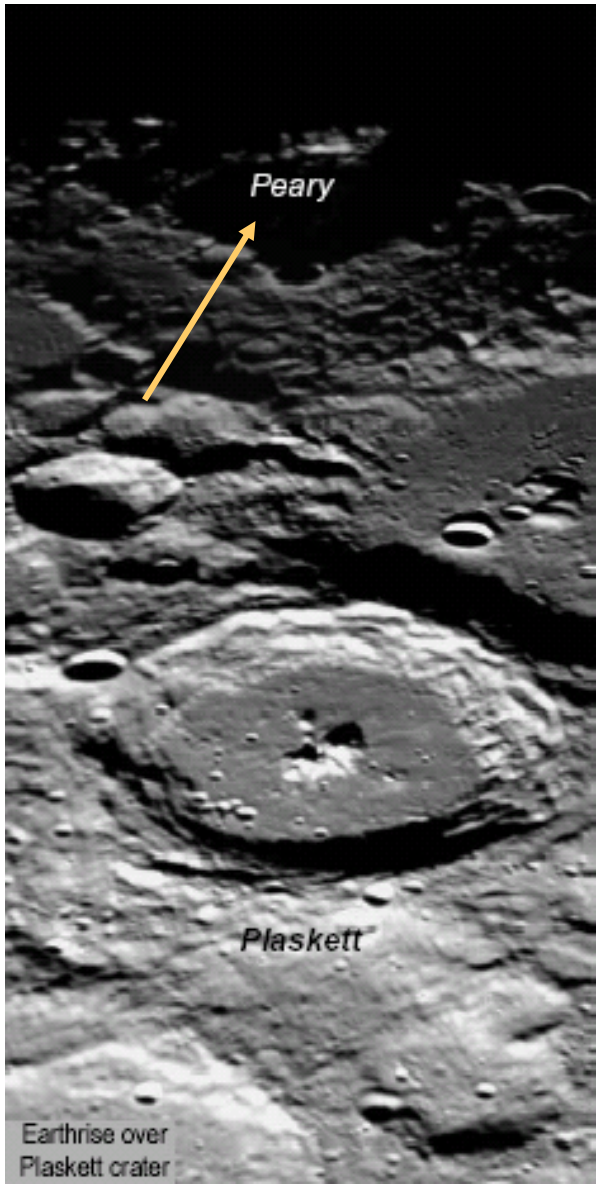

Earthrise over Plaskett crater

This information is pre-decisional and for discussion purposes only.

SCIENCE OBJECTIVES AND PAYLOAD

- Objective 1 (O1) - Characterize polar hydrogen - bearing deposits
  - Composition of deposits
  - Spatial distribution (area, thickness, and depth)

- Objective 2 (O2) - Geologic context of hydrogen - bearing deposits
  - A) Geomorphology of each sample site
  - B) Composition, texture, structure, and thickness of adjacent surface and subsurface deposits (rock and regolith layers)

Lunar Rover Science Instruments and Satisfied Objectives

Instrument	Observation	Science Objectives
Pancam	Panoramic Images	O2, O2a
Coring Drill	1-m penetration for core	O1, O2, O2b
GPR	RF Sounder	O1, O2, O2b
GRNS	Emissions from H_2 bearing species	O1, O2, O2b
Microscopic Imager	Mineralogical images	O2, O2b
LIBS-Raman Spectroscope	Elemental & Mineralogical composition	O1, O2, O2b
TOF-MS	Elemental & Isotopic Composition	O1, O2, O2b
NIR/VIS	Mineralogical Composition	O1, O2, O2b

This information is pre-decisional and for discussion purposes only.

Baselined Rover Landing Site (89.3ºN, 105ºE)

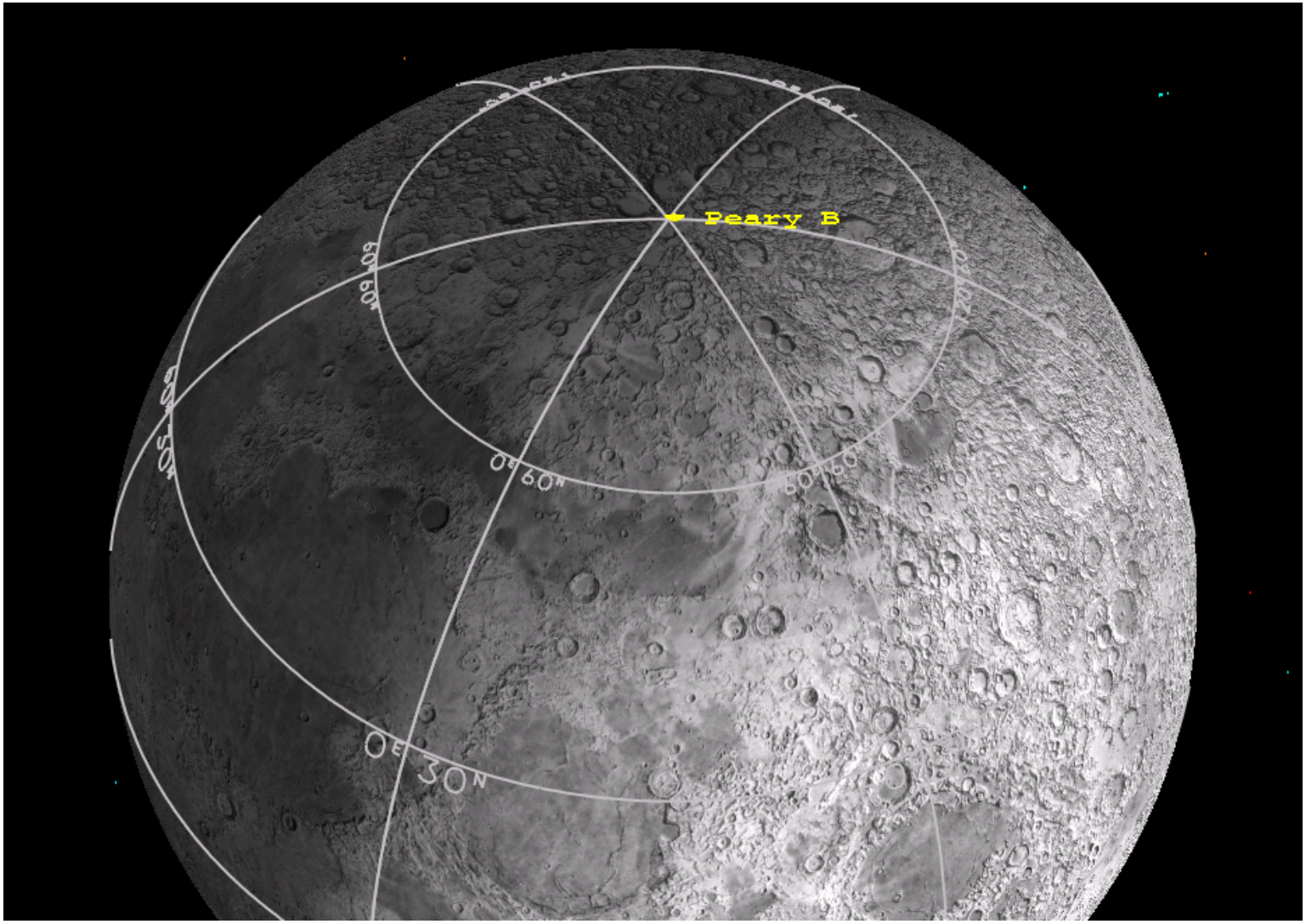

This information is pre-decisional and for discussion purposes only.

Lunar RPS Rover Concept

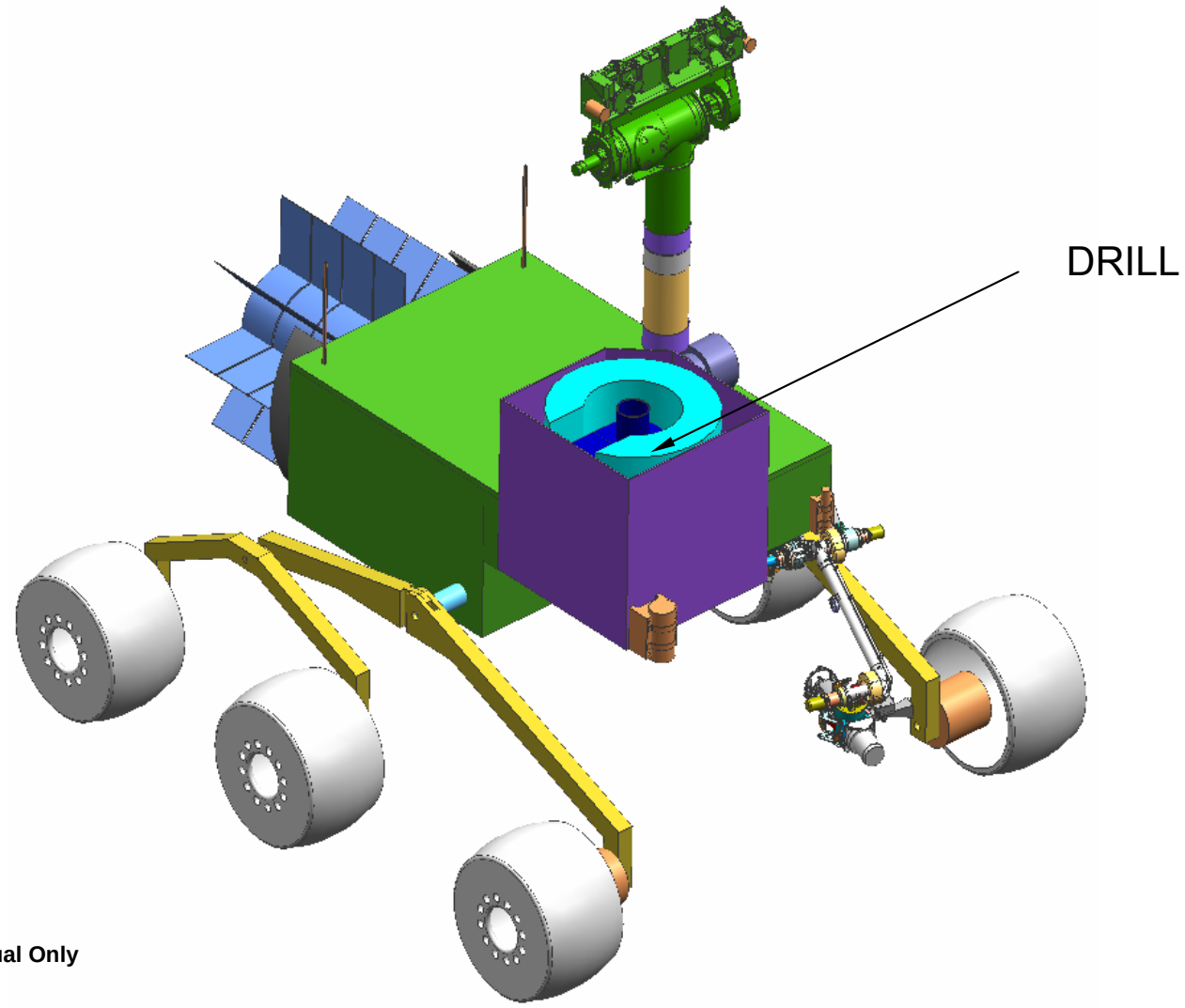

Conceptual Only

This information is pre-decisional and for discussion purposes only.

Small-RPS Powered Lunar Rover Mission

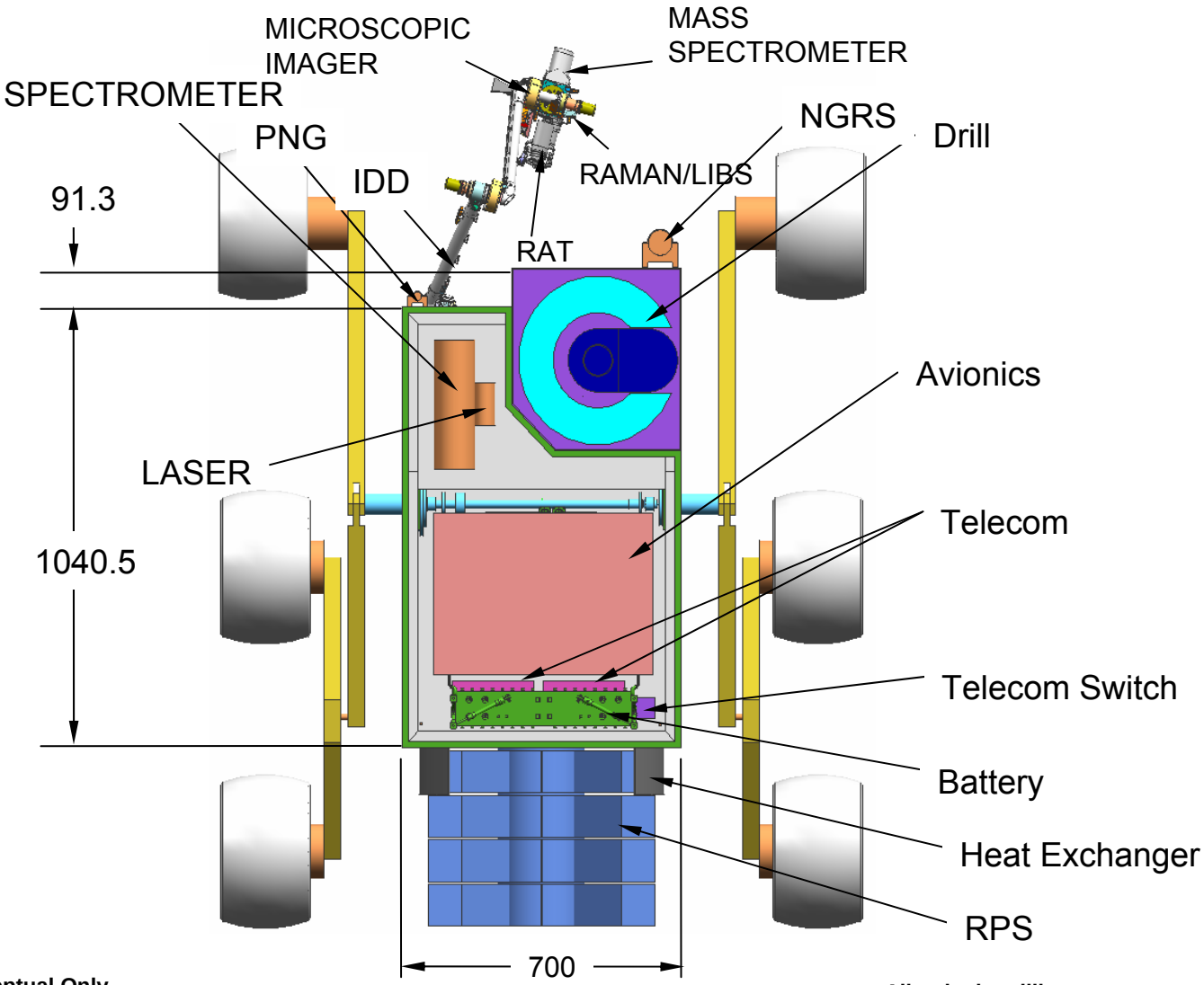

Conceptual Only

All units in millimeters

This information is pre-decisional and for discussion purposes only.

Solar System Exploration

Small-RPS Powered Lunar Rover Mission

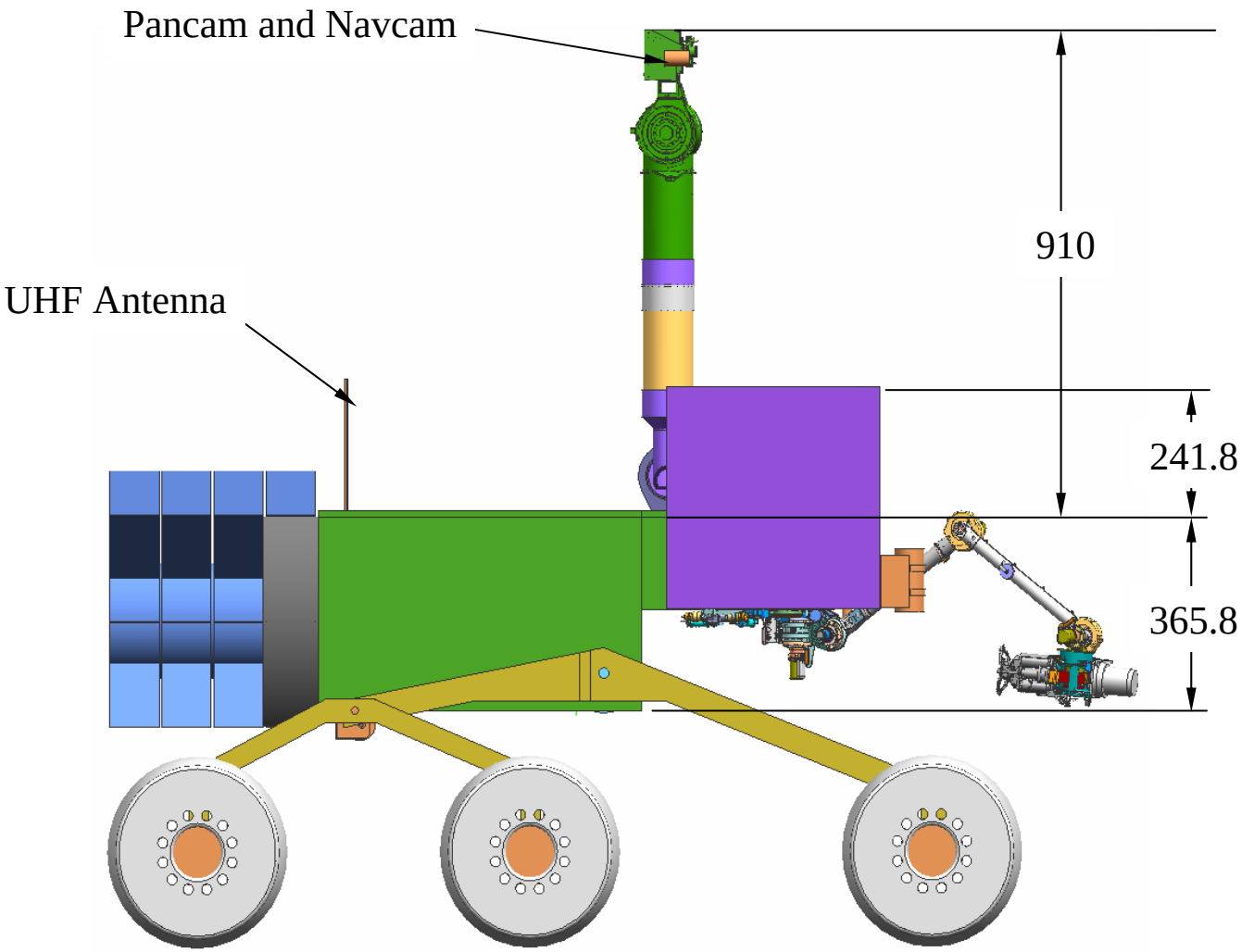

Conceptual Only

All units in millimeters

This information is pre-decisional and for discussion purposes only.

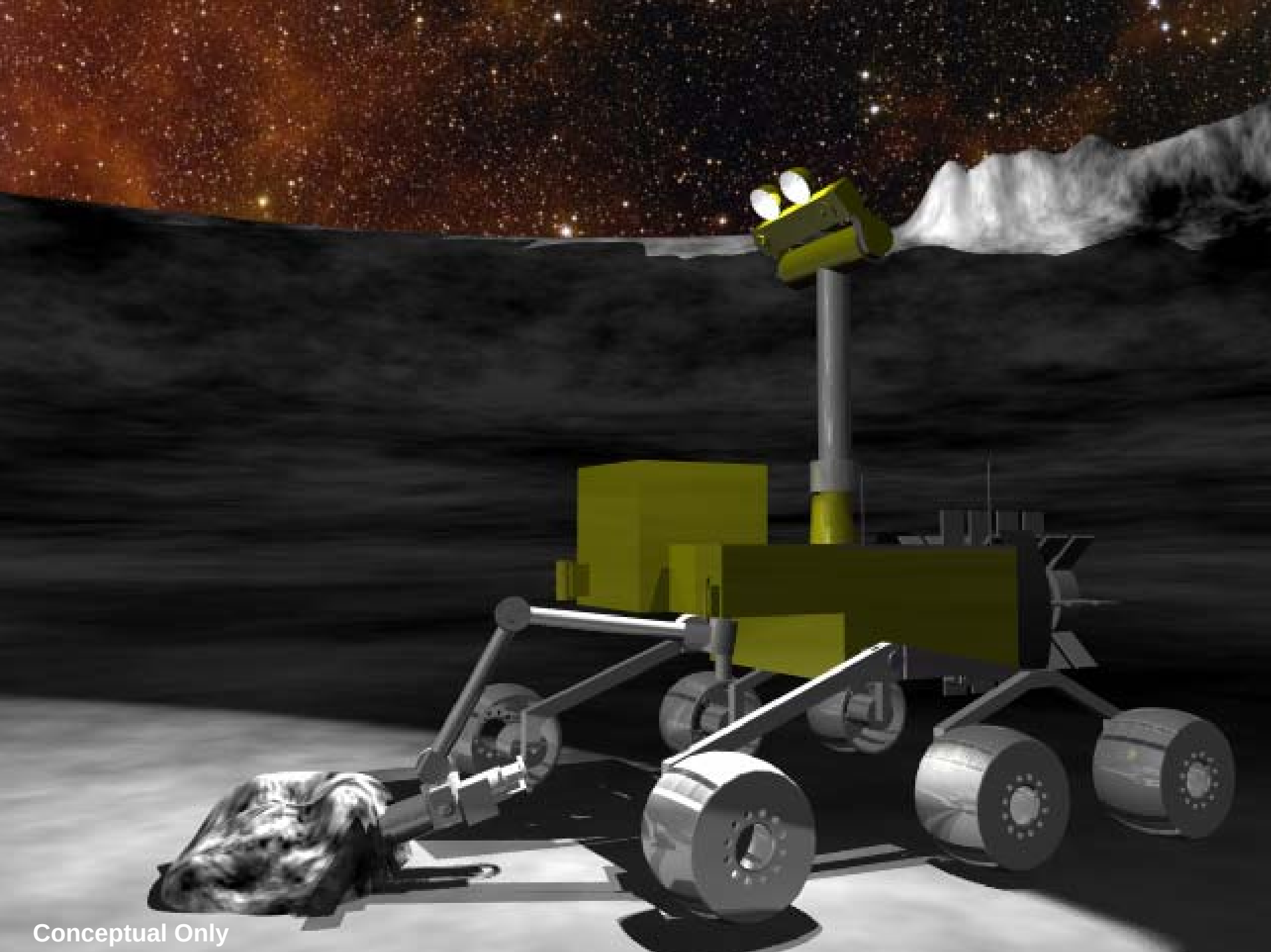
Conceptual Only

SMALL RPS CHARACTERISTICS - CONCEPTUAL

- Four single GPHS units with radial fins
- Assumed 5% power conversion efficiency at BOM
  - Believed to be a conservative estimate
- Each RPS assumed to generate 12.5 We (BOM).
- Total RPS power output would be 50 We (BOM).
- Excess RPS heat would be used to maintain operating temperatures of rover electronics and mechanisms.
- Would use a radiatively-coupled heat pipe evaporator as heat source for internal thermal control loop.

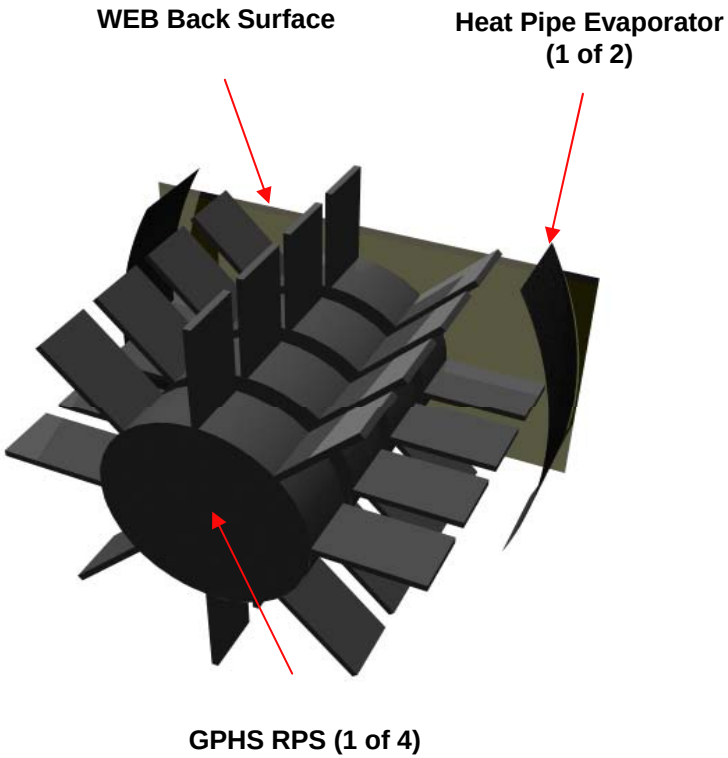

Figure is Conceptual Only

LAUNCH ARCHITECTURE AND MISSION DESIGN

- Phoenix lander would act as carrier for Lunar Rover
- Star 48 engine used for retro ΔV during approach
- No aeroshell required for this concept - allows an open, pre-deployed rover architecture.
- Phoenix legs open in launch configuration
- Ramp from lander deck to surface is the only major deployment

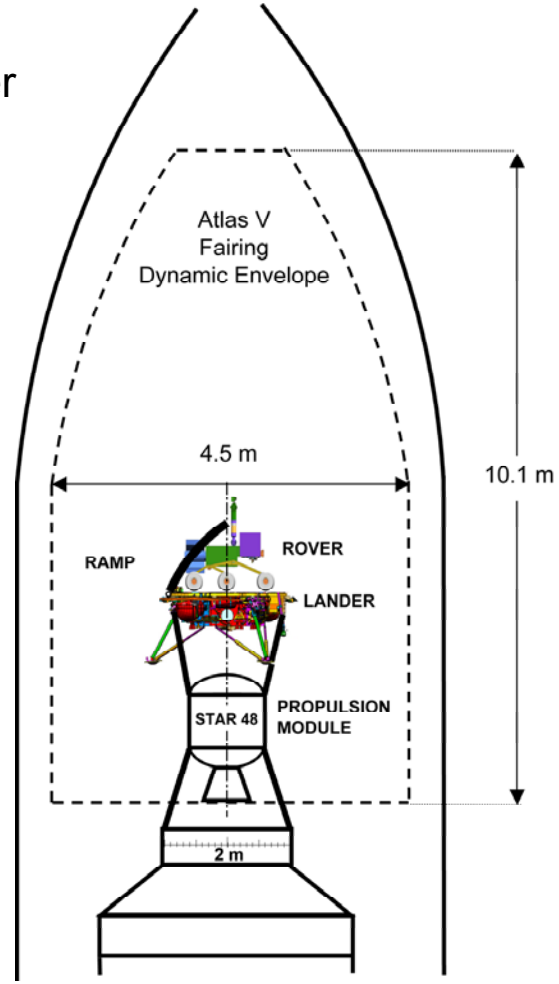

Conceptual Only

This information is pre-decisional and for discussion purposes only.

Small-RPS Powered Lunar Rover Mission

Trajectory is representative of a July 10, 2011 launch.

C_3 = -1.9 km^2/s^2
trip time = 4.6 d

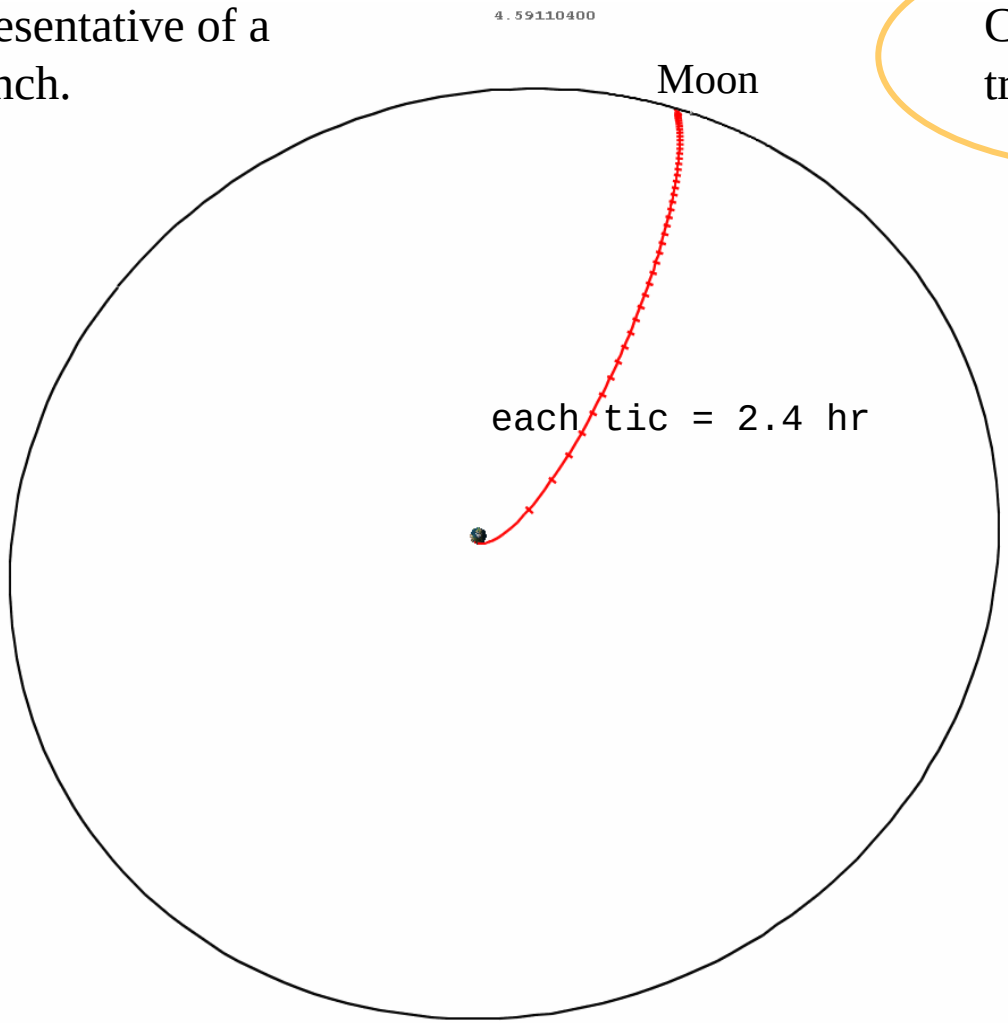

Earth-centered EMO2000

This information is pre-decisional and for discussion purposes only.

Small-RPS Powered Lunar Rover Mission

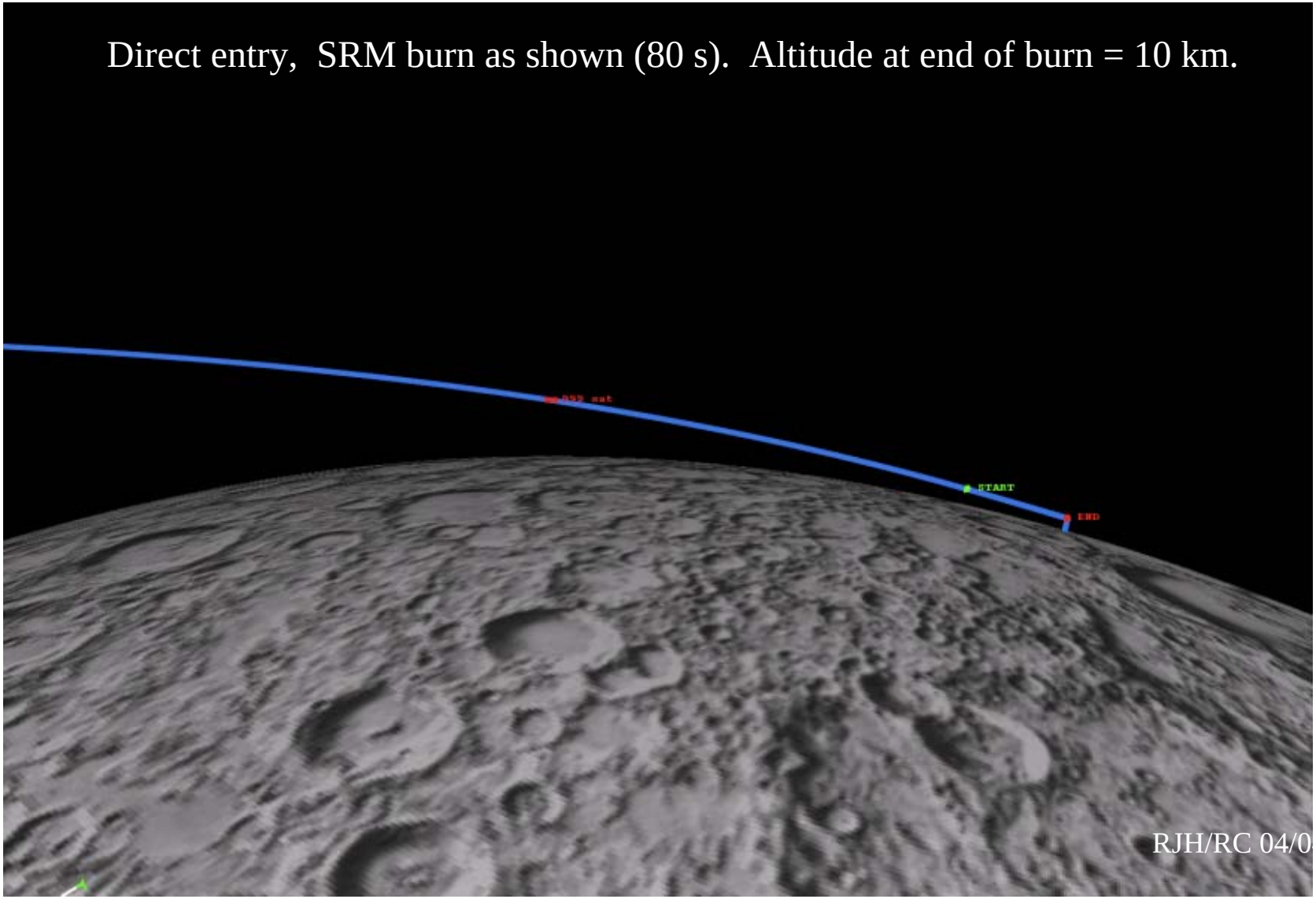

Solar System Exploration

This information is pre-decisional and for discussion purposes only.

Delta-V Requirements

- Propulsion module and Lander have separate propulsion systems used for TCMs, approach burn, cleanup maneuvers, descent burn and hazard avoidance.

- Largest burn is the "Large Approach Burn" – used to null all forward spacecraft velocity prior to descent.
  - Requires a delta V of ~2500 m/s.
  - Uses a Star 48V propulsion system (solid rocket motor)

Event	Duration (s)	Delta V (m/s)(3σ)	Source Vehicle	Comments
Cruise TCMs	10	30	Lander	Phoenix System
Large Approach Burn (LAB)	80	~2500	Propulsion Module	Star 48V Propulsion Module
Post Burn Coast	6	—	Propulsion Module	Ends with Prop Mod separation
LAB Velocity Clean-up	30	25	Lander	Phoenix System
LAB Position Clean-up	30	28	Lander	Phoenix System
Final Descent Burn	30	170	Lander	Phoenix System
Hazard Avoidance Maneuvers	20	10	Lander	Phoenix System
Totals				
Propulsion Module		2500		
Lander		263		Phoenix Capability = 300 m/s

This information is pre-decisional and for discussion purposes only.

BLOCK DIAGRAM OF KEY ELEMENT FUNCTIONS

Three major flight elements:

1. Propulsion Module -
   Solar powered during cruise

2. Lander module -
   Battery powered during descent and landing

   Lander radio & antenna for continuous EDL telemetry

3. Rover -
   RPS/ Battery powered
   Rover antenna (LGA) for telemetry to orbiter

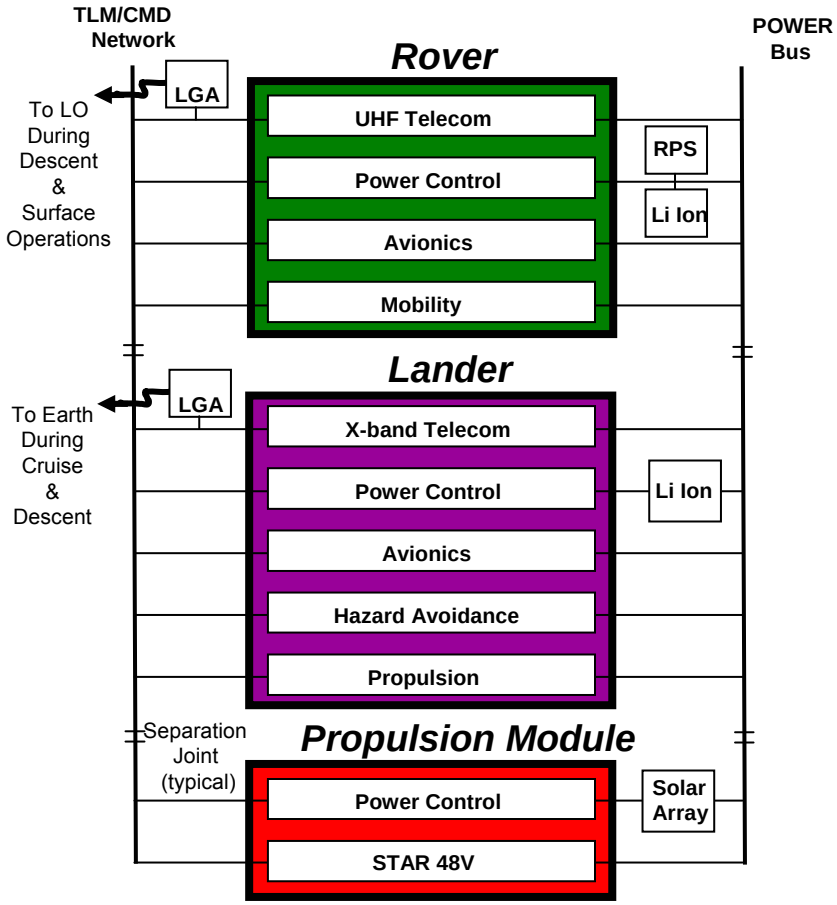

This information is pre-decisional and for discussion purposes only.

ROVER TELECOMMUNICATIONS

- Relies on orbiting relay satellite -
  Earth is never in view from crater floor
- UHF Telemetry rate from rover to orbiter
  ≥ 8 kb/s with 10 W RF power and LGA
- Orbiter downlink ≥ 800 kb/s to 34m station @ X-band
- Store (≥ 2Gb) and forward daily operation from rover
  Single day's telemetry load returned in less than 1 hour

Relay Orbiter Geometry

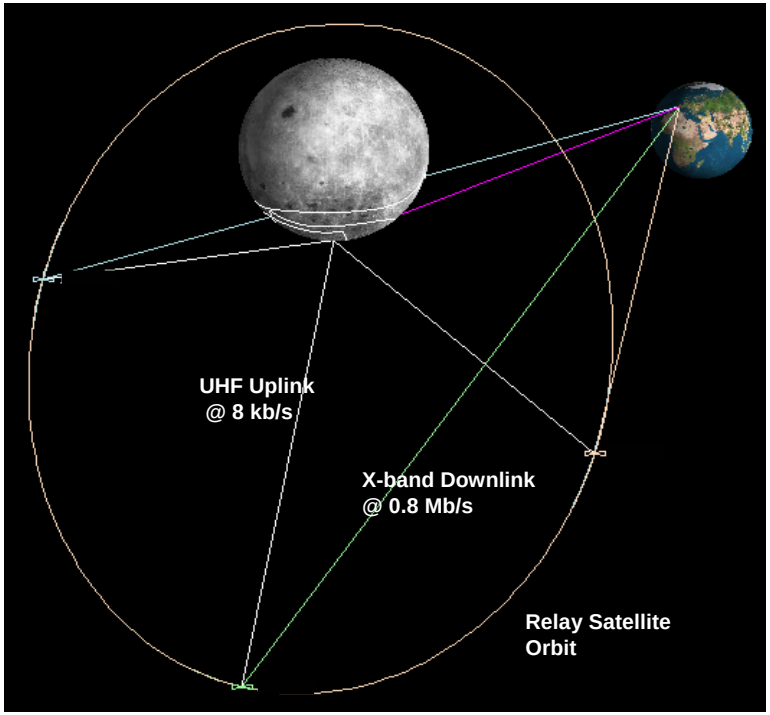

Conceptual Only

This information is pre-decisional and for discussion purposes only.

ROVER DESIGN REQUIREMENTS

- Power from small RPS (~50 We) augmented by Li Ion battery (17 Ah)
- Energy management of daily activities to maintain battery charge using RPS
- Illumination for rover mobility provided by two LED headlights
- Science instruments' accommodations on a remote arm (like MER)
- Drill for acquiring subsurface samples for elemental and isotopic analyses

This information is pre-decisional and for discussion purposes only.

LUNAR ROVER THERMAL CONTROL

- Gas driven thermal control loop (see below) with no pump required
- RPS heat output as source for thermal loop
- Warm Electronic Box (WEB) gets heat from loop

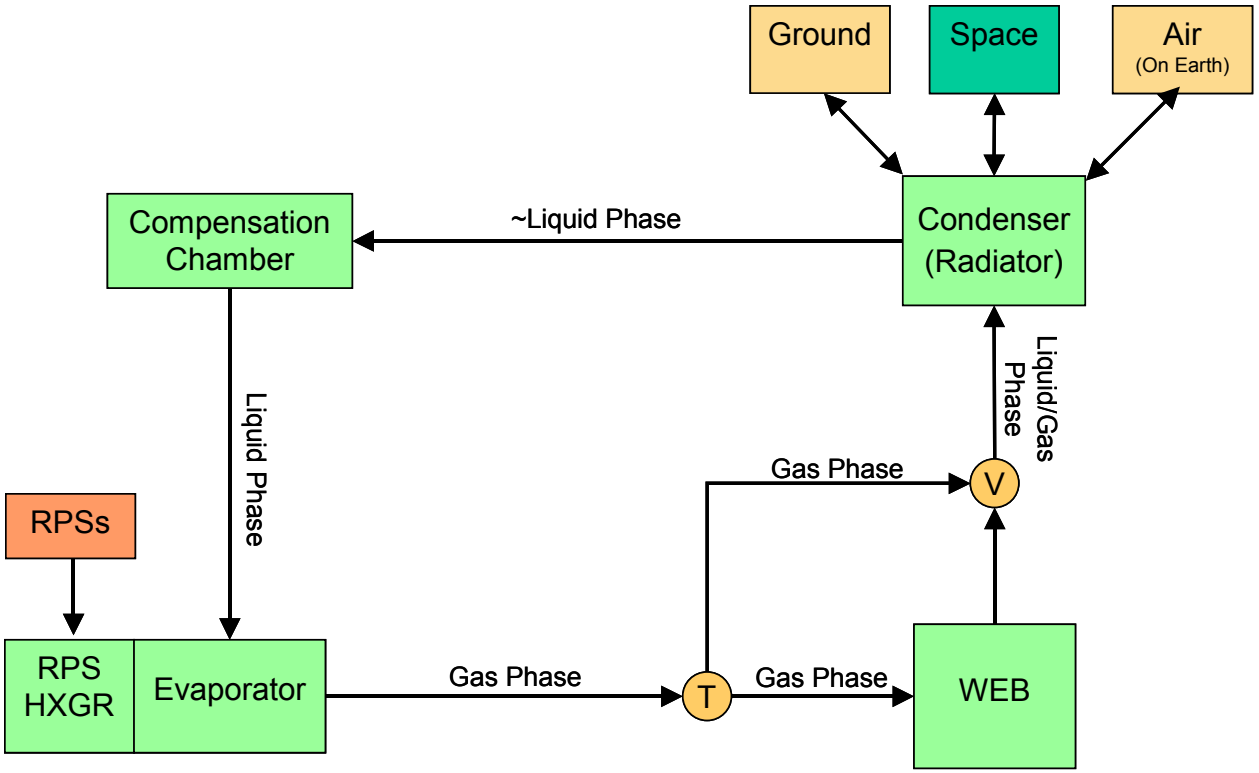

This information is pre-decisional and for discussion purposes only.

Rover Mass Estimates

System	Rover Options			
	4-GPHS Baseline		2-GPHS Option	
	Mass (kg)	Mass with 30% Margin (kg)	Mass (kg)	Mass with 30% Margin (kg)
Rover	268.2	348.7	193.5	251.5
Telecom	7.8	10.14	7.8	10.14
ACS	2.6	3.38	2.6	3.38
Thermal	5.4	7.02	5.4	7.02
Power	37.2	48.36	27.2	35.36
Mechanical	131.9	171.47	101.7	132.21
Avionics	33.1	43.03	33.1	43.03
Payload	50.3	65.39	15.7	20.41
RAT	0.9	1.17		
Pancam	0.7	0.91	0.7	0.91
Microscopic Imager	0.7	0.91		
Illumination	3.0	3.9	3.0	3.9
LIBS/RAMAN	5.0	6.5	5.0	6.5
GPR	0.5	0.65	0.5	0.65
Active NGRS	6.5	8.45	6.5	8.45
Robotic Arm	6.0	7.8		
Mass Spectrometer (TOF)	12.0	15.6		
Subsurface Sampling Drill	15.0	19.5		

This information is pre-decisional and for discussion purposes only.

Lander and Prop Module Mass Estimates

System	Rover Options			
	4-GPHS Baseline		2-GPHS Option	
	Mass (kg)	Mass with 30% Margin (kg)	Mass (kg)	Mass with 30% Margin (kg)
Lander (Dry)	369.2	479.96	369.2	479.96
Power	49.4	64.22	49.4	64.22
Mechanical	162.8	211.64	162.8	211.64
Propulsion	55.1	71.63	55.1	71.63
Telecom	5.4	7.02	5.4	7.02
Avionics	16.3	21.19	16.3	21.19
ACS	20.8	27.04	20.8	27.04
A&AC	12.8	16.64	12.8	16.64
Hazard Avoidance	8.0	10.4	8.0	10.4
Thermal	11.6	15.08	11.6	15.08
Rover Egress Ramp	30.0	39	30.0	39
Lander (Propellant and Pressurant)	66.1	85.93	66.1	85.93
Propellant	66.0	85.8	66.0	85.8
Pressurant	0.1	0.13	0.1	0.13
Propulsion Module	2340.2	3042.3	2340.2	3042.3
Propulsion	2287.0	2973.1	2287.0	2973.1
Star 48V Motor	2275.0	2957.5	2275.0	2957.5
Star 6B Motors (2)	12.0	15.6	12.0	15.6
Power	12.5	16.25	12.5	16.25
Thermal	1.9	2.47	1.9	2.47
Telecom	0.0	0.0	0.0	0.0
Mechanical	38.8	50.44	38.8	50.44
Total Launch Mass	3043.7	3956.8	2969.0	3859.7

This information is pre-decisional and for discussion purposes only.

ROVER POWER MANAGEMENT

- Battery required for peak power loads
- Management of battery energy (State of Charge) during activities
- Typical 24 hour sequence can maintain sufficient SOC

Battery State of Charge Scenario for 1 day

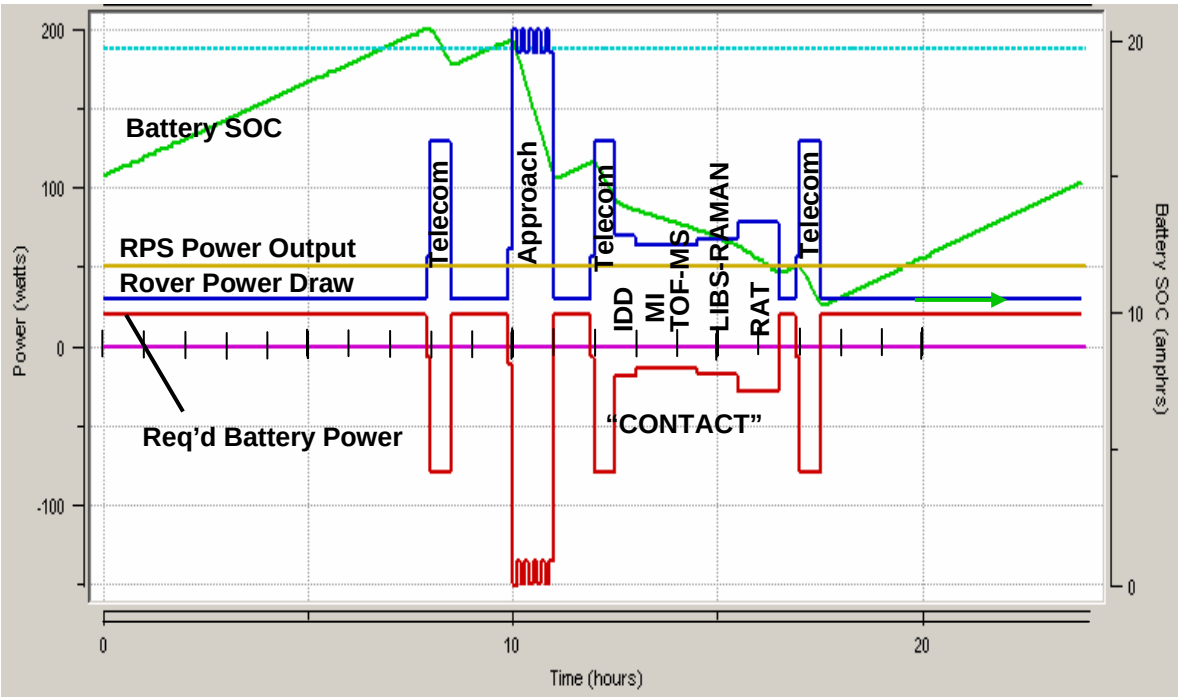

Summary & Conclusions

- An RPS-powered Lunar rover would land in the Peary-B Crater to search for water-ice and perform high-priority mineralogy and surface science measurements.
- Four GPHS-based RPSs would provide continuous power to the rover (50 We @ BOM) to meet the science objectives.
- The highest power draws are mobility and telecom. Secondary Li-Ion batteries are required to handle these peak loads. Recharged by RPS.

- RPS could enable the Lunar rover mission.
  - RPS is currently the only feasible power option for this mission.
    - Operation in the permanently shadowed Perry-B crater precludes using solar power.
    - The long mission duration precludes the use of batteries alone.
  - RPS would provide excess heat that could be used to keep vital electronics and subsystems warm in the frigid lunar environment.

This information is pre-decisional and for discussion purposes only.