Thermal, Mass, and Power Interactions for Lunar Base Life Support and Power Systems

Darrell L. Jan*, Naresh Rohatgi*, Gerald Voecks*, Paul Prokopius**
.Jet Propulsion Laboratory of the California institute of Technology
● 'NASA Lewis Research Center

ABSTRACT

A model has been developed for quantitative examination of the! integrated operation of a lunar base power system, employing regenerative fuel cell technology, which would lead to incorporation into a lunar base life support system. The> model employs methods developed for technology and system trade studies of the Life Support System configuration for the National Aeronautics and Space Administration (NASA). This paper describes the power system and its influence on life support while comparing various technologies, including pressurized gas storage and cryogenic storage, and different operation conditions. Based on preliminary assumptions, the mass, power, and thermal requirement estimates are made at the level of major components. The relative mass contribution and energy requirements of the! components in various configurations are presented. The described interactions between power and life support include direct influence, such as water and oxygen storage, and indirect influence, through reliability and maintenance considerations.

INTRODUCTION

The life support system for a lunar base will be composed of several physical/chemical processes and will include reactant process streams, power generation and consumption, and associated thermal management. It is prudent to examine the! analogous processes of the lunar base power system in order to seek approaches which may exploit interactions between the power and life support systems in the overall lunar base design. Such approaches may include equipment commonality of such items as pumps, compressors, storage tanks, electrolysis equipment, and heat exchangers; inclusive design if it is appropriate to serve both systems by a single set of equipment, and emergency scenario options. Both life support and power systems are dynamic, yet the time constants vary from the diurnal biological cycle to the length of the lunar day, twenty-eight times that of earth. Between these cycles there may be windows of opportunity for some procedures and options.

This study examines the potential interactions, employing the following approach:

A nominal lunar base power system is assumed to employ a photovoltaic - regenerative fuel cell (PVRGFC) process using either cryogenic or compressed gas storage technology. Such systems have! been modelled using various approaches, see for example [1 Kohout, 2 Harris]. In this paper we have taken an approach analogous to that of the LiSSA studies [3,4, 5,6, '1]: The ASPEN PLUS chemical process simulation program is used to model the physical and chemical processes of the PVRGFC system, simulating material, power, and thermal quantities. Several point designs at various fuel cell and storage temperatures and pressures were calculated. The results are transferred to spreadsheets for further systems analysis. Mass, power, and thermal requirement results are presented in detailed breakdown. These results are further discussed with analogous values from long term life

suppolt System studies. The issues of maintenance anti reliability are also discussed.

Using an approach modelled after the LiSSA tool will facilitate future plans to incorporate both power and life support systems and their interactions into a single fully-connected modelling effort.

ASSUMPTIONS

The lunar base power system is modelled on a 25 kilowatt basis [see, for example, the 90 day study 8]. The duty cycle is 12 earth days of photovoltaic operation, followed by 16 earth days of fuel cell usage. Thermal radiators are assumed to have an emissivity of 0.595 and specific mass of 5 kg/m^2, with rejection temperature (340 K) and sink temperature (220 K) similar to [1].

Two modes of storage are modelled: (1) composite pressurized tanks, baseline safety factor 2.0 and 2.1 MPa (300 psia) residual pressure, and (2) metallic cryogenic tanks, modelled after the PRSA Space Shuttle tanks, having 10% residual propellant. Ten percent additional mass is allowed for structure. Photovoltaic mass scaling assumes 123 w/kg and power conditioning mass is assumed to be 10 kg/kw, following [1].

The baseline 2.1 MPa (300 psia) Proton Exchange Membrane (PEM) electrolysis sytem has a mass of 279 kg, while the PEM fuel cel 1 has a mass of 416 kg [10]. The cases modelled ale! SIIOW I-1 i1"1 Table 1. The heat exchanger model is a 57.6kg/m^2 (11.8 lbm/ft^2) stainless steel tube-in-shell model.

Thc! mass estimate for the cryogenic equipment cannot be expected to bc! very precise. Lunar-based systems, for which operatation, repairs, and maintenance ale! complicated by a low-gravity vacuum environment, are not far along in design and development, and field experience has yet to take place. On the other hand, estimation from eart-based equipment, for which there is ample data and a large experience base, has uncertainty due to the need for design modifications whose net effect is unclear. For example, cooling of equipment with natural c)r forced convection of ambient air would 1-10t apply. Alsc), ground-based equipment is less sensitive to mass penalties, but it iS also not required to fit into the Space! Shuttle and withstand 1aunch stresses. For this paper, earth-based designs are chosen as a starting point, and the mass of cryoliquefaction equipment is estimated from a curve fit. to data from the National Bureau of Standards, 1"1ow known as NIST [9], Because these! values are based on earthbound technology, it is nc)t expected that they will apply with great precision to lunar equipment, but this approach is expected to give some indication of what directions should be taken.

Cryogenic System

Storage of cryogenic hydrogen arid oxygen begins with the electrolysis of water, which is assumed to take p] are at 15.5C (60F) and ?.1 MPa (300 psia) pressure. For this baseline 25 kw system, the hydrogen mass flow rate is 1.04 kg/hr (2.29 lbm/hr) anc1 the corresponding oxygen flow is 8.26 kg/hr (18.2 lbm/hr).

Hydrogen Storage. Hydrogen cryo storage processing executes thc! following stages, as shown in Figure 1: The gas is first dried, then is compressed tc) 310 C, 10.3 MPa (590 F, 1500 psia). At this pressure it is radiatively cooled to 0 C (32 F). A first stage of refrigeration takes the gas to '1-l K. The hydrogen is then cooled by Joule-Thompson expansion to 30 K. A second refrigeration process brings the temperature down to 20 K. At this temperature the hydrogen is cryopumped to ?0 K, 1 .9 MPa(285 psia).

Oxygen Storage. oxygen processing is somewhat simpler, as also shown in Figure 1. Again the gas is dried, but no compressor is necessary. In fact, it is possible to extract work from expansion of the gas using a turbine; however the energy gained would be negligible. Single!-stage cooling and cryopumping bring the oxygen to 90 K, 6.5 MPa (950 psia).

Supply of Hydrogen and Oxygen. The supply of cryogenic hydrogen and oxygen occurs as shown in Figure 2: There is energy input into the storage tank, which causes mass transport into a heat exchanger. Herc, some of the recovered waste heat from the fuel cell is used to heat the hydrogen or oxygen. An optional turbine at this point could be powered by gas expansion, but it would recover only about 0.5 kw, sc) its

usage does not appear warranted. A second heat exchanger again employs 1ecovered waste heat . If a PEM fuel cell is being modeled, the gas is humidified prior to entering the fuel cell. Finally, the fuel cell, PEM or alkaline, is modelled with its cooling water loop.

Compressed System

Compressed Storage. This is straightforward, as shown in Figure 3. Starting from 15.5 C (60 F), 1 atm water , process water is mixed in anti the Stream is pumped to ?.1 MPa (300 psia) and is electrolyzed. The gas is dried, compresse cl, and radiatively cooled to its storage condit ion of 50 C, 21 MPa (1?2 i-', 3000 psia) . Values for the storage tank safety factors are chosen at 1 .2 and ?.0.

Compressed SuppI y. During the supply cycle, the tank begins at a ?1 MPa (3000 psia) condition and is sized for a final pressure of 2.1 MPa (300 psia). Again, a turbine Stage: is possible but wouldproduce negligible power, and is omitted . . There is energy input to the tank, passage through a heat exchanger which recovers waste heat , and humidification in the case of the PEM cell .

PVRGFC RESULTS

Storage Technology

Mass Breakdown. 'Jtic! mass breakdown of the storage technologies is shown in Figure 5. The mass of both oxygen systems is mostly clue! to the Oxygen itself, and the! systems are fairly close in total mass. The is because the tank mass savings of the cryogenic system is balanced by the mass of tile required liquefaction equipment . The compressed hydrogen system has a very high fraction due to tank mass; thus the compressed system as a whole is dominated by tank mass . The cryogenic hydrogen system mass, however, contains considerable liquefaction equipment ma.ss . As a result, it is much heavier than the compressed hydrogen system.

Thermal and Electrical Loads. These results are listed in Table 3 and depicted in Figure 6. The electrical load (and corresponding thermal 1equirement) for the total compressed system is, not surprisingly, due to the compressors . The magnitude of the load is about 4 kw. The cryogenic system is considerably more demanding in its electrical and thermal rejection requirements . The total electrical load is 18 kw, nearly al] due to liquefaction equipment, with hydrogen liquefaction (? st.ages) demanding somewhat more power than oxygen liquefaction.

Factor of Safety. The influence of factor of safety on compressed storage mass is shown in Figure '/. A factor of 1.2 was chose! for comparison . This is not currently acceptable by aerospace standards, but it was purposely chosen to be low enough to demonstratc! any significant mass difference. The mass savings is about 20% for the hydrogen system. The mass savings is considerably less for the oxygen system due to the smal 1 mass fraction attributable to the tanks.

Supply Technology and Waste Heat Rejection

Mass Breakdown. Supply technology needs for either the compressed c)r cryogenic systems are less complex than their storage counterparts . The mass breakdowns for the var-ious cases are given in Figure 8. The mass elements include radiators, heat exchangers, and humidifiers . Both cryogenic and compressed sources are considered, and 4 combinations of temperature and pressure are shown for each. Radiator mass dominates by far in al] cases. Furthermore, it will be seen later that the mass of the supply system is a very smal1 fraction of the total system mass .

High Pressure Electrolysis System

The mass influence of high and low pressure electrolysis on the total systems is depicted in Figure 9. Common elements such as tank contents and power conditioning comprise t-he! first the first 4500 kg crf al] systems. This graph also shows how the: mass savings gained by using cryogenic tanks is more than offset by heavy liquefaction equipment . There is some mass savings attainable by going from 21 M}]a (300 psia) to ?10 MPa (3000 psia) electrolysis, but is only about 2% for the compressed system and about 4% for the cryogenic system.

POWER/LIFE SUPPORT SYSTEM INTERACTIONS

The commonality of oxygen and water suggest considering the interaction of power and life support systems. The two systems could conceivably be combined as in Figure 10. In this conceptualization, both the fuel cells and the human habitat are served by a single source of oxygen and a single source of water. Hydrogen is supplied to both the fuel cells and the air revitalization system. One water treatment system supports the electrolysis unit as well as the habitat. Heat rejection equipment may be shared by all systems.

Whether this concept is viable, or whether separate gas and water-handling systems are preferable, depends on a number of interface issues. Among these are:

- *cleanliness level or purity acceptable to both power and life support.
- *safety--availability of a backup system.
- *failure mode effects--normal operation may be acceptable, but a failure mode which is acceptable to the power system may be unacceptable for life support.
- *quantitative evaluation of advantage obtained by using common design.

We focus here on the last issue. It is expected that the commonality of the design will be affected to a large degree by the relative demand of resources of the two systems. Simply put, a mission which has immense power requirements and a small crew will have different design commonality issues from a mission whose energy is used almost completely for life support. We attempt to quantify the the relative resource needs in a rough manner, as follows.

Figure 11 can be used to get an idea of the scale of interactions for particular missions. 11(a) shows the the mass of water consumed per day, as consumed by the power system during electrolysis, per kilowatt on the upper x-axis(solid line), and as consumed by the crew per number of crew, on the lower x-axis (dashed line). We can choose a nominal case of 20 kW power system and a crew of 5. Then the power system consumes about 260 kg of water per day, while the crew requires only about one-fifth of that amount. In this case, the life support water processing might be separate in order to maintain the purity of the power system water. However, the power system would have enough clean water to serve as an emergency backup supply for life support.

Looking at the same case in Figure 11(b), which shows oxygen consumption, we see that the power system consumes oxygen at more than ten times the rate used by the crew, suggesting that the life support oxygen supply system could be designed as a small fraction of the power system oxygen supply, for this configuration.

Either of these cases would be affected by the phase of the power system cycle. At the end of a lunar day there would be relatively little water but a large amount of oxygen, whereas at the lunar night's end there would be considerable water but only reserve amounts of oxygen. The life support requirements, on the other hand, are relatively continuous.

Of course, actual design depends on many other factors as described above. Figure 11 is intended to be a visual guide to the overlapping requirements of the life support and power systems.

Maintenance. It is important to examine the repair and maintenance needs which a mechanical system can be expected to incur. As a first estimate, the Mean Time Between Failure (MBTF), Mean Time Between Maintenance (MTBM), Mean Time to Repair (MTTR), and Maintenance Man Hour (MMH) values were found for ground-based earth cryogenic and compressed processing technology [11]. (Analogous results for the life support system remain to be described in a future report.) The components of the power system scenarios examined here were listed and their associated MBTF, MTBM, and MMH per year (MMH/Y) values were allocated and summed.

In choosing a number for MTTR, reference [11], based on years of maintenance of earth-based equipment, gives a typical value of 2-7 hours per repair, whereas reference [12], a preliminary estimate for Space Station Freedom maintenance, assumes most repairs take less than one hour. We compromise here at MTTR=14 hours. Following the calculation of the MMH/Y, a conversion was made to an equivalent mass based on a person's mass requirements per MMH, assuming a normal

w(0) k week. The results are sl iown in Figure 12. It shou ld be noted that the esti mates here are not expected to be at all precise, but rat her are meant to be indicators of where additional development effort may be needed, or which directions may be taken under current technology. II_ is clear that this calculation suggests that the power system employing cryogenic storage technology will have much greater maintenance needs and associat ed mass requirements than the compressed technology system.

CONCLUSIONS

Power System. 1'1 comparing compressed storage to cryogenic storage, the! oxygen systems are nearly the same. Cryogenic hydrogen storage has considerably less tank mass, }.)ut this is more than offset by the mass of liquefaction equipment required to attain the low temperature needed for liquid hydrogen. As discussed above, tile ma ss estimate for thc! cryogenic systems has unavoidable uncertainty, anti it may be possible to design 1 una r cryogenic systems wi th lower mass. However, it is recognized that cryogenic equipment will require cc)Ilsicic~-able! development before usage on the moon. One approach, then, might be to initially employ cryogenic oxygen storage and compressed hydrogen St C)l'age!, to be followed by using the experience gained with cryogenic lunar oxygen stc)l-age: to design lower mass cryo-hydrogen storage systems.

Power/Life Support. Preliminary power and life support interactions have! been described. The Li SSA approach, previously applied to life support, has been appl ied to the power system, and future work will incorporate these systems into a single Li SSA-type study. The Maintenance ant] Repair budgets have considerable uncertainty at this point; however it i s expected that Maintenance and Repair wi 1 1 play as important a role as it has for Space Station Freedom, and may be a determining factor in technology choices.

ACKNOWLEDGEMENTS

'l'his work has been carried out by the Jet Propulsion Laboratory, California Institute of Technology, unde r a contract with the Nat ional Aeronautics and Space Administ ration.

REFERENCES

1. Kohout, L. L., "Cryogenic Reactant Storage for Lunar Base Regenerative Fuel Cells," NASA Lewis.

2. Harr is, D., Gill, s., Wallin, W., "Regener at ive Fuel Cel1 Model for Lunar/Mar s Surface Stationary and Mobile Power Systems," AIAA/NASA/OAI Conference on Advanced SEI Technologies, AIAA- 91-3620, Sept embe r 1991.

3. Seshan, P. K., Ferrall, J., and Rohatgi, N., "Human LifeSupport During Interplanetary Travel anti Domicile - Part 1: System Approach," SAE paper 891431, presented at. the! 19th ICES Conference, July, 1989.

4. Ferrall, J., Seshan, P. K., a1"1d Rohatgi, N., "Human Life Support During Interplanetary Travel and Domicile - Part 11: Generic Modular Flow Schemat i c Modeling," SAE papcr 9113?2, presented at the 21st ICES Confer ence, July, 1991.

5. Seshan, P. K., Ferrall, J., and Rohatgi, N., "Human Life Support During Interplanetary Travel and Domi cile -- Part 111: Mars Expedition System Trade Study," SAE paper 911323, presented at. the 21st ICES Conference, July, 1991.

6. Rohatgi, N. K., Ferrall, J., and Sesh an, P. K., "Human Life Support During Interplanetary Travel and Domicile - Part IV: Mar s Expedition Technology Trade Study," SAE paper 9113?4, presented at the! 21st 1 CES Conference, July, 1991.

7. Ferrall, J., Rohatgi, N. K., and Seshan, P. K., "Human Li fe Sup port During Interplanetary Travel and Domicile - Part V: Mar s Expedit ion Technology Trade Study for Solid Waste Management," sAE paper 921119, presented at the 22st ICES Conference, July, 1992.

8. Repori. of the 90- Day St udy on Human Exploration of the Mo on anti Ma rs, A. Cohen, Director, November 1989.

9. Strobridge, T. R., "Cryogenic Refrigerators - An Updated Survey," NBS Technical Note: 655, National Bureau of Standards, June 1974

10. Huff, J., Vanderborgh, N., and Hedstrom, L., "Technology Assessment and Trade-Off Study of Fuel Cell and Electolyzer Technologies for the Project Pathfinder Energy Storage System," Los Alamos National Laboratory, LA-UR-90-3244, February 1991.

11. Guidelines for Process Equipment Reliability Data with Data Tables, Center for Chemical Process Safety of the AIChE, 1989.

12. Neuschaefer, K., and Neal, D., "Reliability and Maintainability Allocation for Work Package 1 of the Space Station Freedom Program," AIAA/NASA Symposium on the Maintainability of Aerospace Systems, July 1989.

13. Space Station Freedom ACD Document, 1990.

1 .ist of Figure captions:

Figure 1. Schematic of cryogenic 1 lydrogen and Oxygen storage processing equipment.
Figure 2. Schematic of cryogenic Hydrogen and Oxygen supply processing equipment.
Figure 3. Schematic of compressed f lydrogen and Oxygen storage processing equipment.
Figure 4. Schematic of compressed 1 lydrogen and Oxygen supply processing equipment.
Figure 5. Storage processing equipment mass breakdown.
Figure 6. Thermal and Electrical usage of storage processing.
Figure '/. Effect of Factor of Safety on compressed storage equipment mass.
Figure 8. Mass breakdown of equipment for supply and waste heat rejection.
Figure 9. 1 Iigh and Low pressure electrolysis equipment mass breakdown.
Figure 10. Schematic of possible Power/Life Support interacting system.
Figure 11. Scaling of Power and Life Support system requirements. (a) Water, (t)) Oxygen.
Figure 1?.. Maintenance considerations.

Table 1. Conditions mode.llcd base.d on reference 10.

PEM FUEL CELL

P(bar)	2.1	2.1	6.9	6.9
T(C)	49	82	49	104

PEM ELECTROLYZER

P(bar)	21	207
T(C)	49	49

Table 1

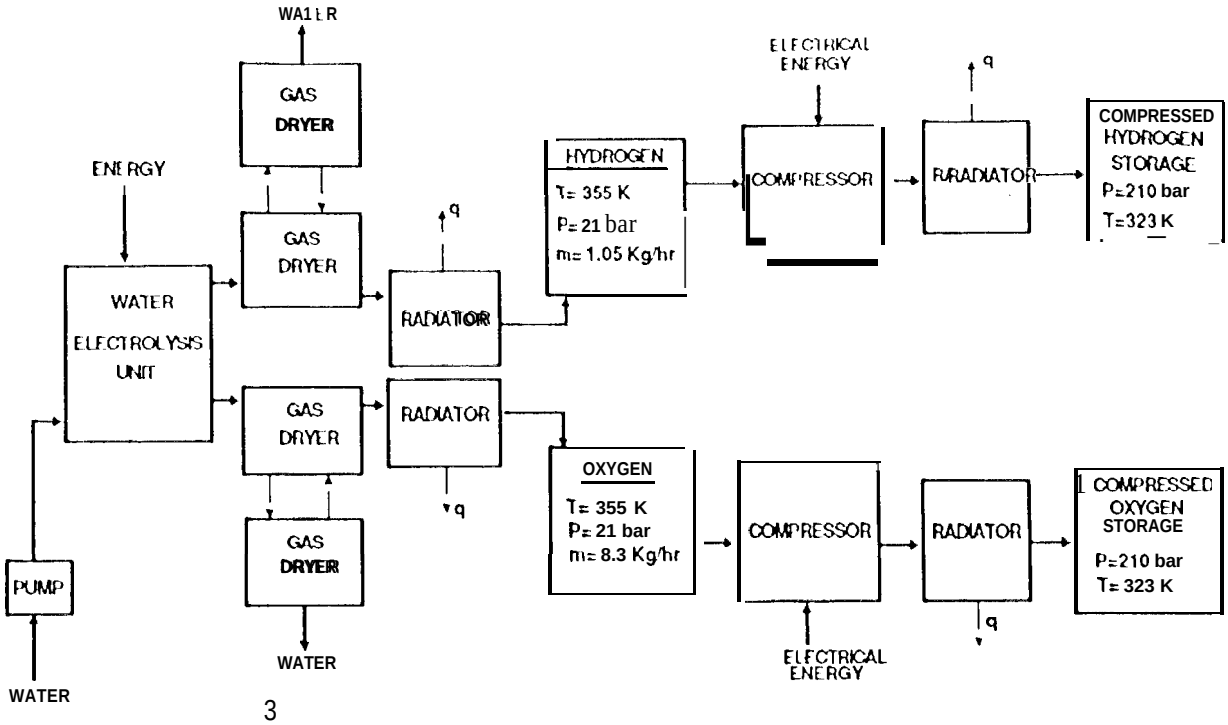

3

Figure 2. Compressed Oxygen & Hydrogen Storage Systems

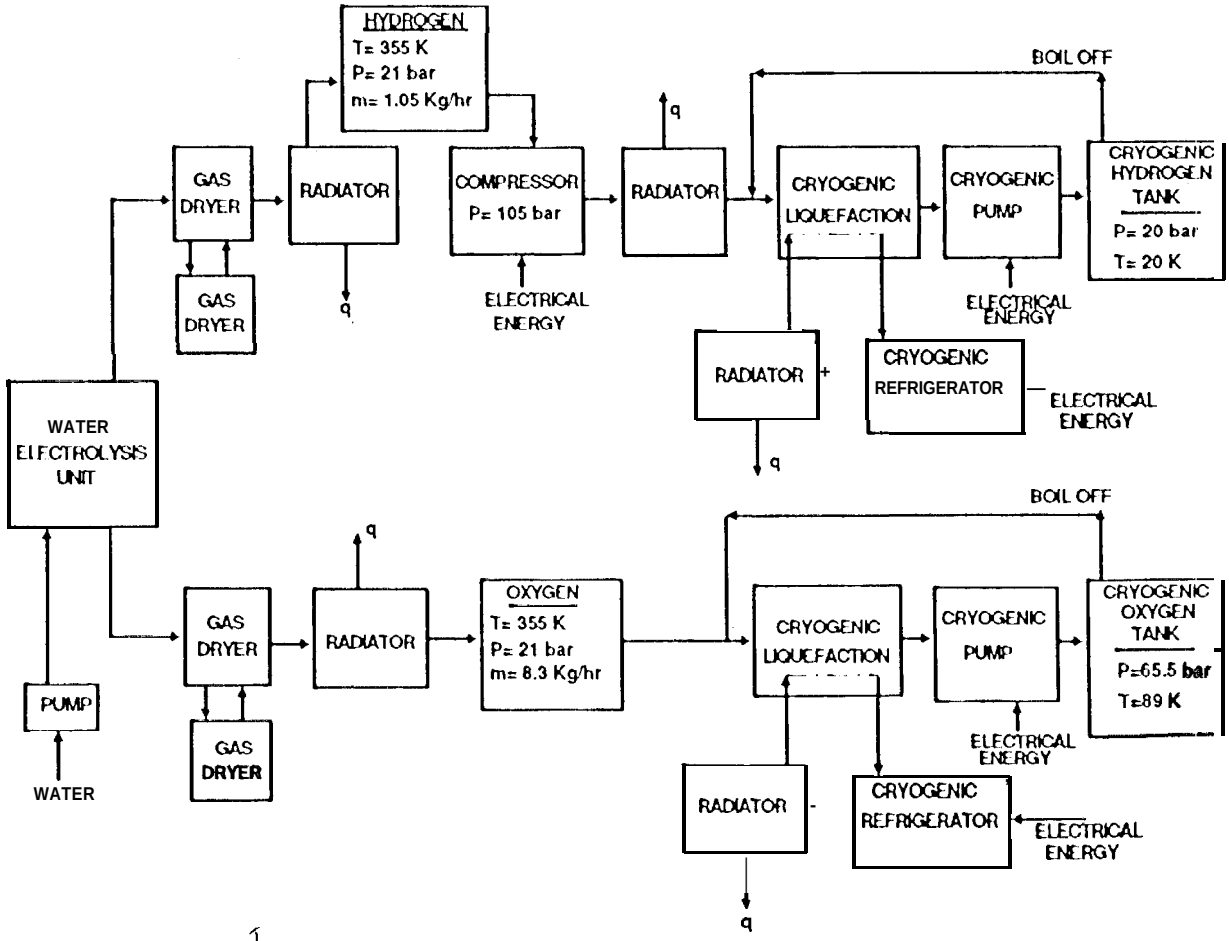

1

Figure 3. Cryogenic Oxygen & Hydrogen Storage Systems

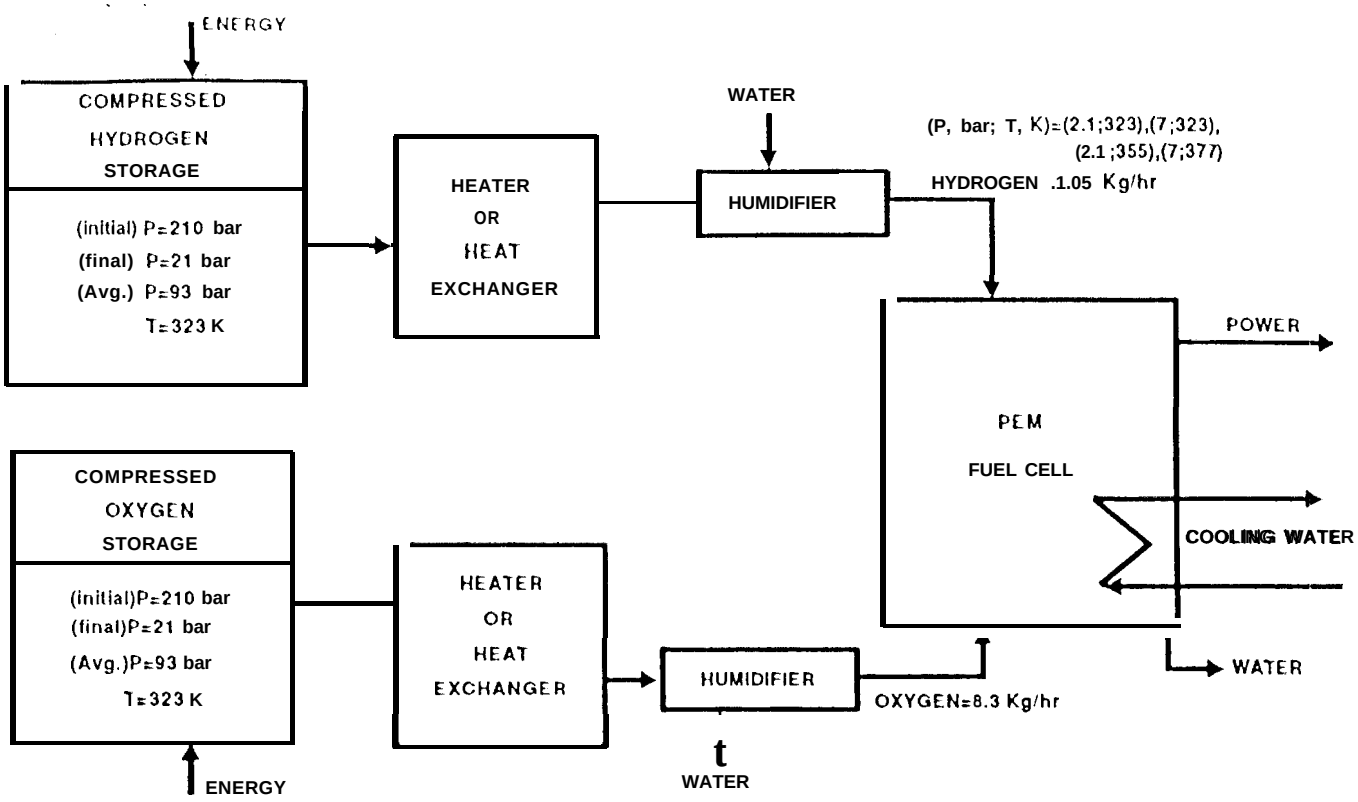

Figure 4. Compressed Oxygen & Hydrogen Supply

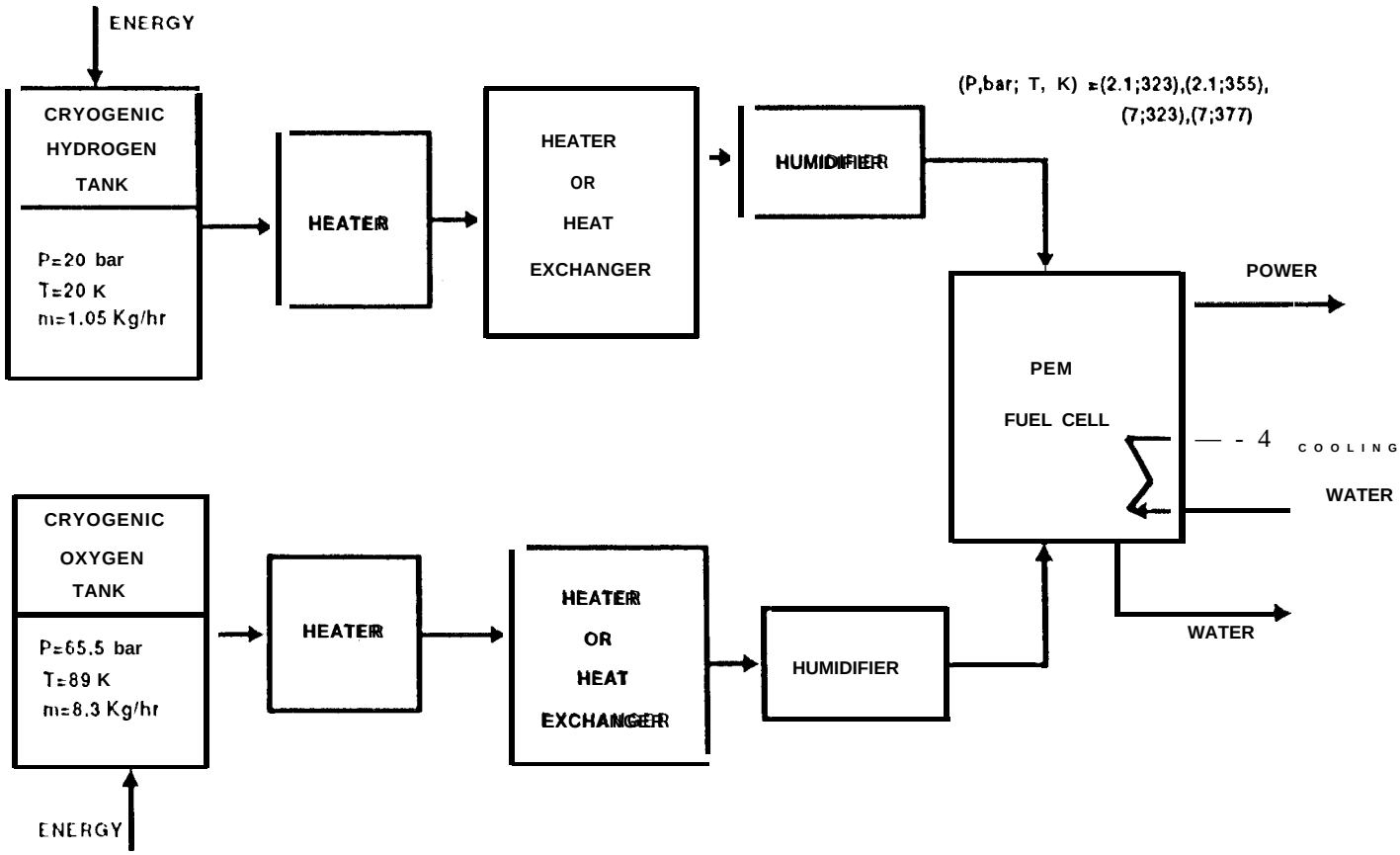

Figure 5. 'Cryogenic Oxygen & Hydrogen Supply

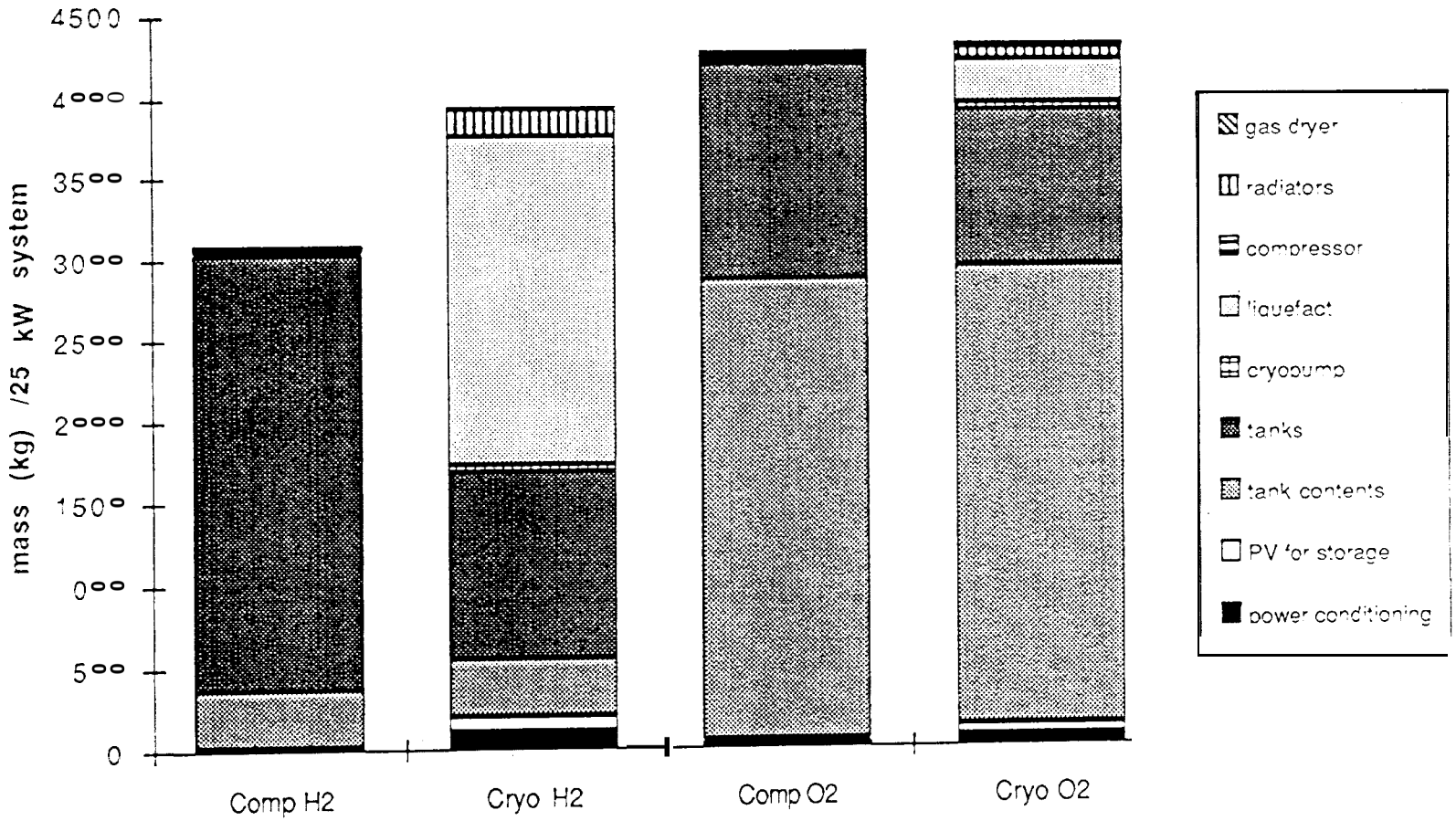
mass (kg) /25 kW system
4500
4000
3500
3000
2500
2000
1500
1000
500
0
Comp H2
Cryo H2
Comp O2
Cryo O2
gas dryer
radiators
compressor
liquefact
cryopump
tanks
tank contents
PV for storage
power conditioning

FIGURE 5

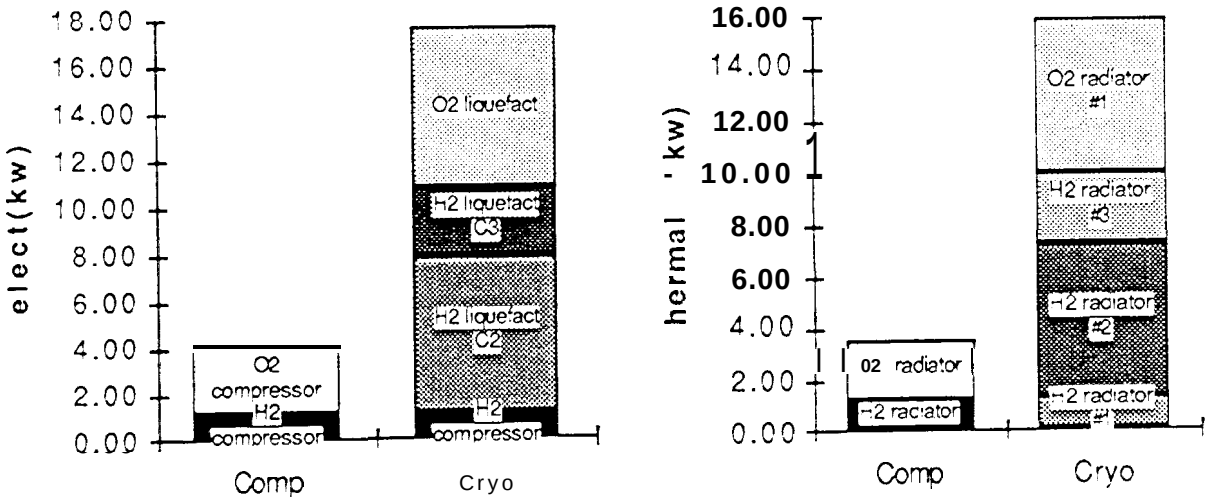
elect(kw)
18.00
16.00
14.00
12.00
10.00
8.00
6.00
4.00
2.00
0.00
O2 compressor
H2 compressor
O2 liquefact
H2 liquefact C3
H2 liquefact C2
H2 compressor
Comp
Cryo
hermal (kw)
16.00
14.00
12.00
10.00
8.00
6.00
4.00
2.00
0.00
02 radiator
H2 radiator
O2 radiator #1
H2 radiator #3
H2 radiator #2
H2 radiator #1
Comp
Cryo

FIGURE 6

FACTOR OF SAFETY--IMPACT ON MASS OF COMPRESSED STORAGE SYSTEMS

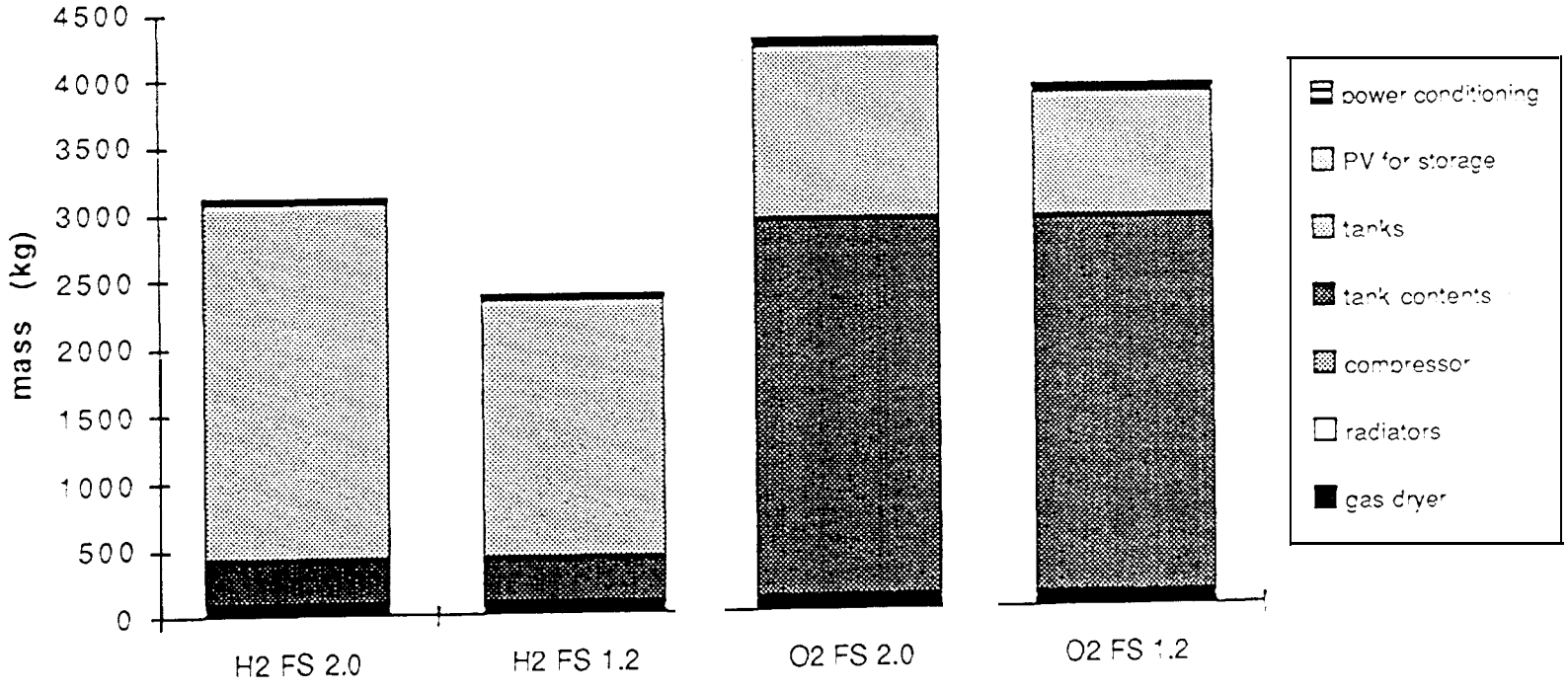

FIGURE 7

PEM SUPPLY TECHNOLOGY & WASTE HEAT REJECT ON MASS BREAKDOWN

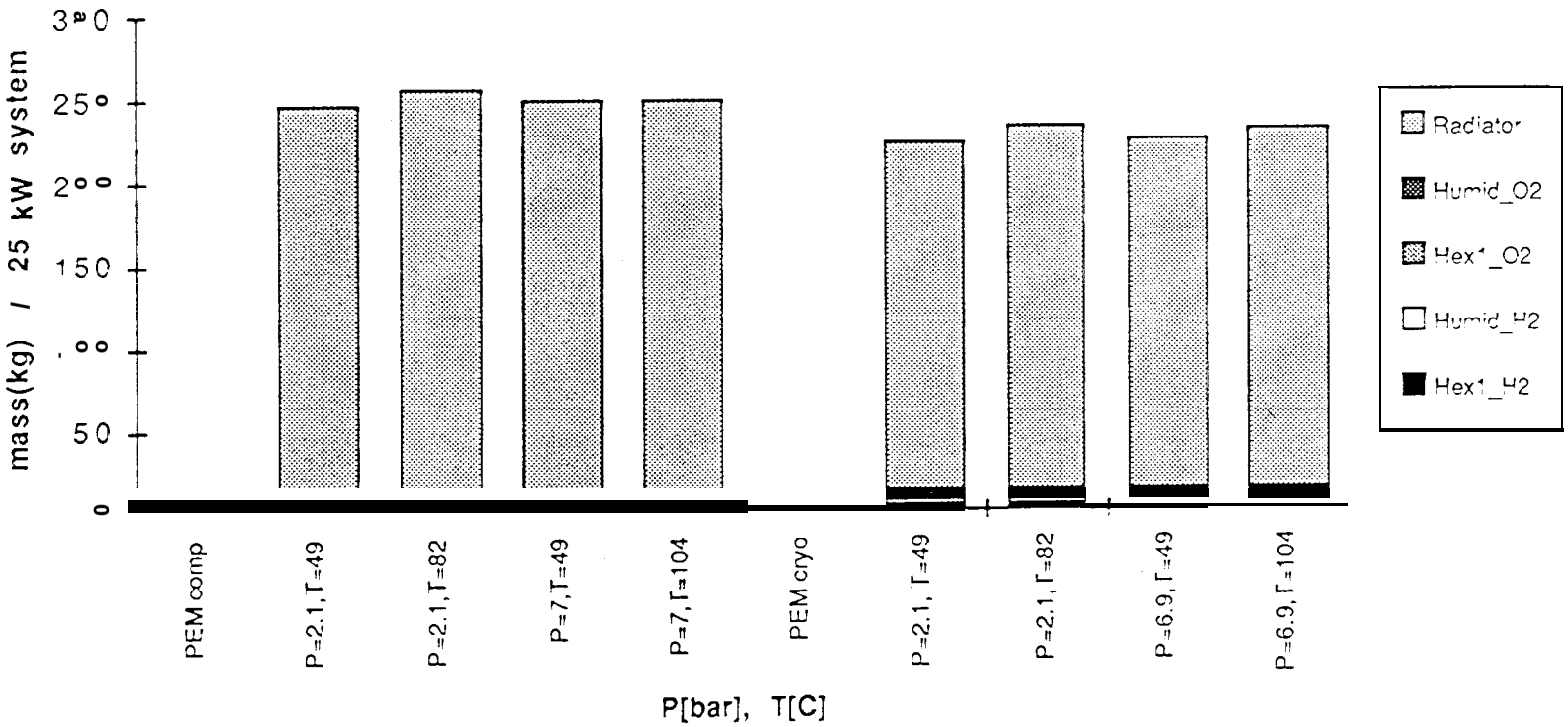

FIGURE 8

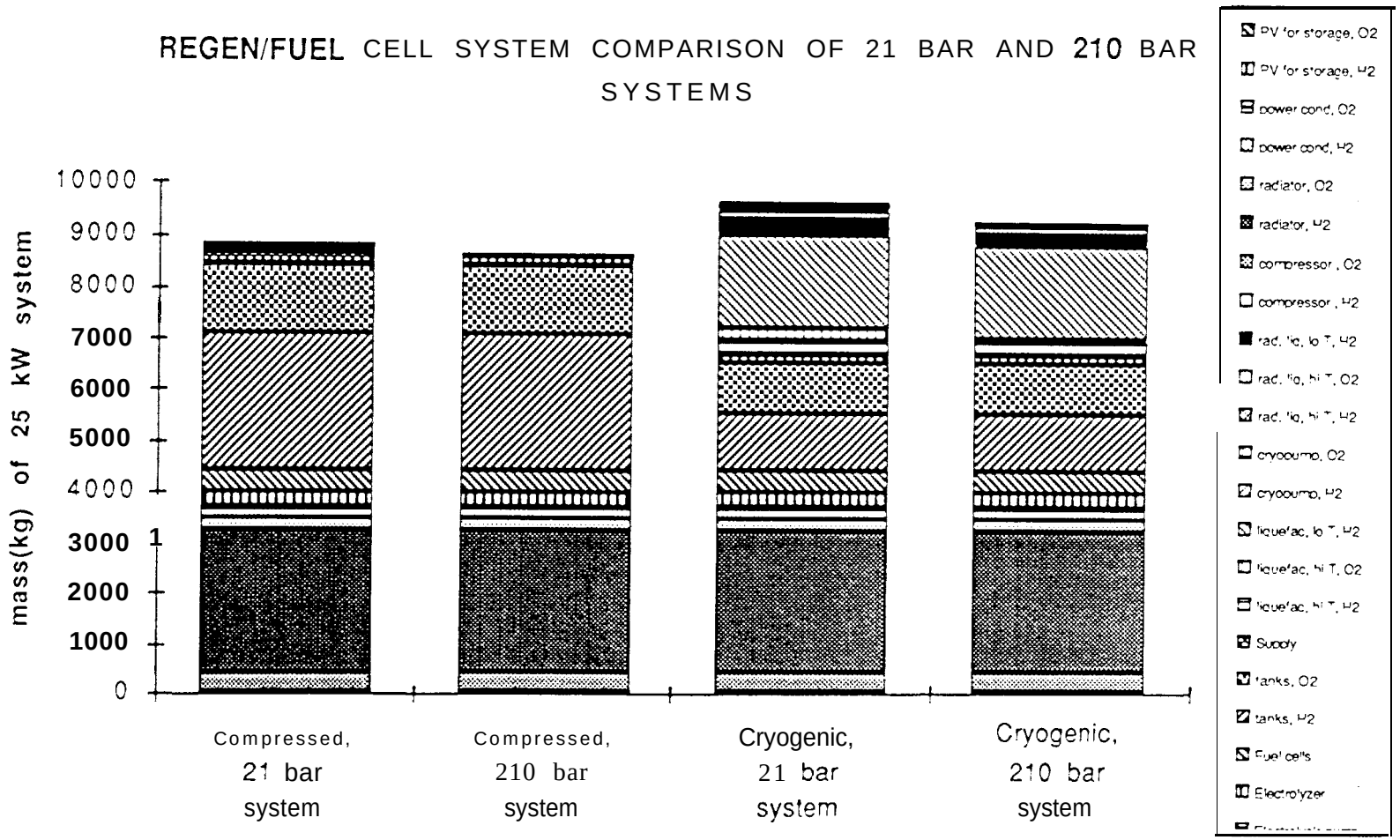
REGEN/FUEL CELL SYSTEM COMPARISON OF 21 BAR AND 210 BAR SYSTEMS
mass(kg) of 25 kW system
10000
9000
8000
7000
6000
5000
4000
3000
2000
1000
0
Compressed, 21 bar system
Compressed, 210 bar system
Cryogenic, 21 bar system
Cryogenic, 210 bar system
PV for storage, O2
PV for storage, H2
power cond, O2
power cond, H2
radiator, O2
radiator, H2
compressor, O2
compressor, H2
rad. liq, lo T, H2
rad. liq, hi T, O2
rad. liq, hi T, H2
cryopump, O2
cryopump, H2
liquefac, lo T, H2
liquefac, hi T, O2
liquefac, hi T, H2
Supply
tanks, O2
tanks, H2
Fuel cells
Electrolyzer

FIGURE 9

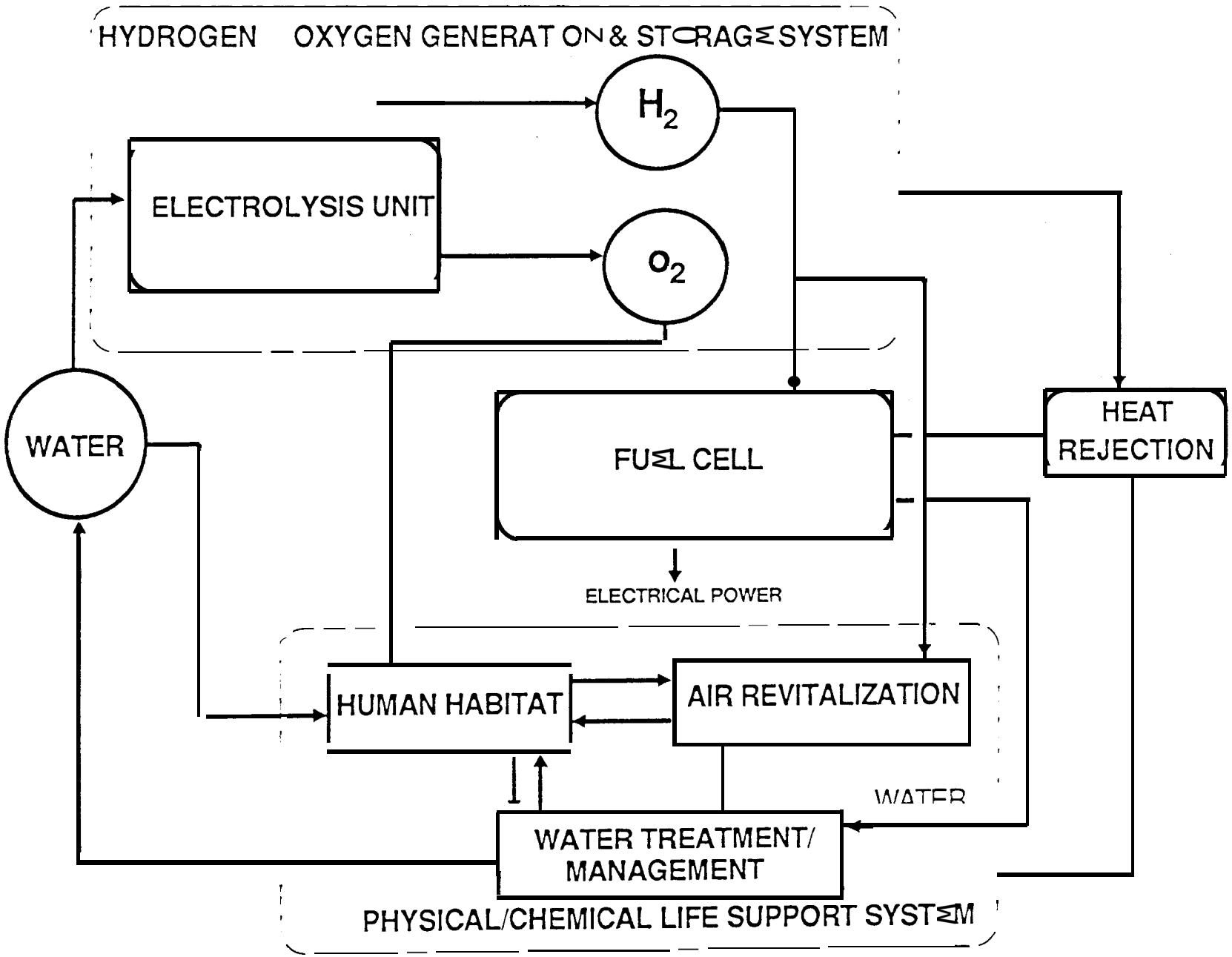
HYDROGEN OXYGEN GENERATION & STORAGE SYSTEM
H_2
ELECTROLYSIS UNIT
O_2
WATER
FUEL CELL
HEAT REJECTION
ELECTRICAL POWER
HUMAN HABITAT
AIR REVITALIZATION
WATER
WATER TREATMENT/ MANAGEMENT
PHYSICAL/CHEMICAL LIFE SUPPORT SYSTEM

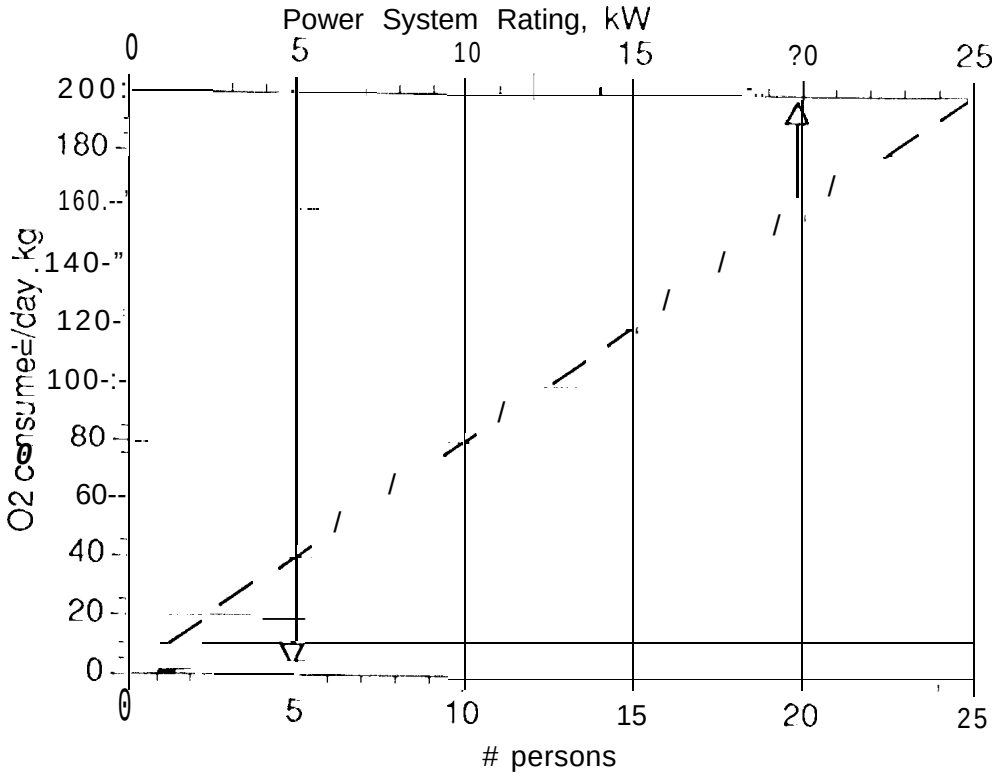
Power System Rating, kW
0
5
10
15
?0
25
200
180
160
140
120
100
80
60
40
20
0
O2 consumed/day, kg
0
5
10
15
20
25
persons

Figure 11 (b)

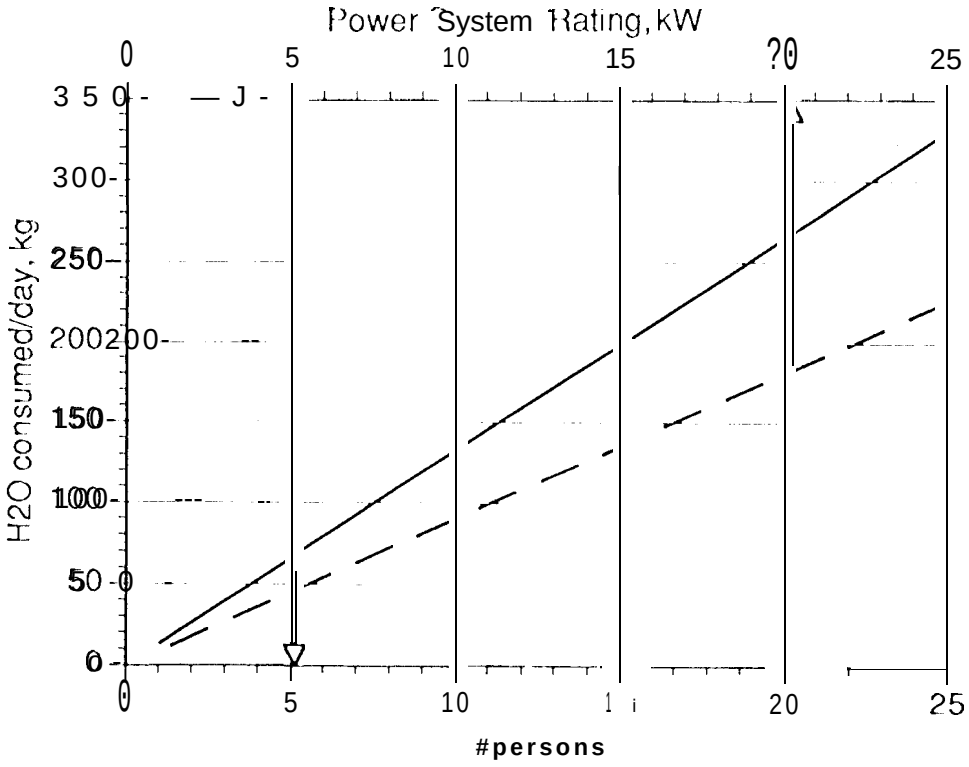
Power System Rating, kW
0
5
10
15
20
25
350
300
250
200
150
100
50
0
H2O consumed/day, kg
#persons

Figure 11(a)

	Cryo, MTBF	Cryo, MTBM	Cryo MMH/Y	Comp, MTBF	Comp, MTBM	Comp MMH/Y
pump, '20, hex	10000	4348	28	10000	4348	28
pump, '20, elec	10000	4348	28	10000	4348	28
compressor, H2	19000	8261	"5	19000	8261	15
compressor, O2				19000	826"	"5
liquefaction, hi T, 02	4000	1739	71			
liquefaction, hi T, H2	4000	1739	71			
liquefaction, lo T, H2	4000	1739	71			
expander	7200	3?30	39			
cryopump, H2	4000	1739	71			
cryopump, 02	4000	1739	71			
Total			434.82			57.90

Notes:
MTBF=Mean Time Between Failure
MTBM=Mean Time Between Maintenance
=MBTF/k, where k.2.3 isused
by reference 3.
MTTR=Mean Time To Repair
MMH=Maintenance Man Hour

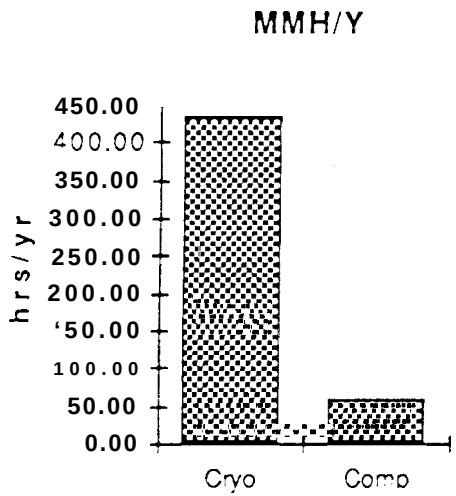

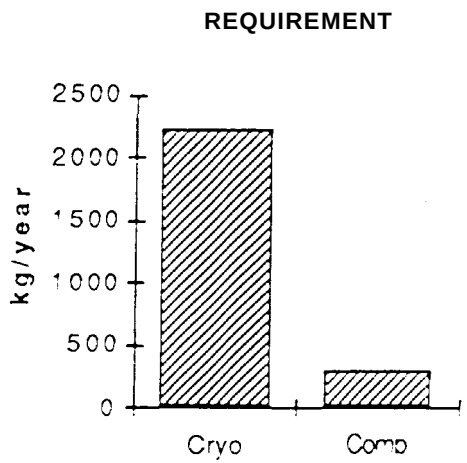

FIGURE 12