Astrometric Models of the Phobos Orbiter TV Cameras

by

Thomas C. Duxbury
Jet Propulsion laboratory
California Institute of Technology
Pasadena, CA 91109 USA

for the book

Television Investigations of Phobos
Genry A. Avanesov, Editor
Nauka Publishing House
USSR. Academy of Sciences
Moscow, USSR

Revision 1.0
August 1990

1.0 INTRODUCTION

Astrometric models of the 3 Phobos Orbiter TV cameras, their pointing in inertial space, the position of the Phobos Orbiter with respect to Mars, Phobos and Deimos, and transformations from inertial to body-fixed coordinates are needed to transform between the image coordinates of a picture element ("pixel") and coordinates in other inertial or bcxly-fixed systems (Figure 1). Examples of such transformations include determining the vector normal to the surface of Phobos at specific pixels to compute photometric scattering properties of the Phobos surface, and determining the inertial direction to the center of Phobos for Navigation.

This Section provides the astrometric models and transformation matrices needed for geometric calculations associated with the TV images. The parameter values of these models arc given for each camera, as arc the various position vectors and transformation angles for each picture. Additionally, the spacecraft-centered, inertial angles of Phobos and Deimos, used for orbital dynamics and navigation studies, arc given.

2.0 REFERENCE SYSTEMS

There arc four major reference systems needed in developing the astrometric models of the TV camera system, enabling onc to transform from image coordinates to other coordinate systems of interest. These reference systems arc:

1. the inertia] Earth Mean Equator and Equinox of Besselian 1950.0 ($\bar{X}\bar{Y}\bar{Z}$ and referred to as 131950- Figure 2.) which is used to define the spacecraft position, the Phobos Orbiter attitude, the TV camera pointing, and the orientations of Mars and Phobos;
2. the Orbiter-fixed $\bar{x}\bar{y}\bar{z}$ system which is used to define the spacecraft attitude, and to define the alignment of the TV cameras;
3. the TV camera-fixed $\bar{m}\bar{n}\bar{l}$ system which is used to define camera pointing and image coordinates; and
4. the body-fixed reference systems of Mars and Phobos which arc used to define their surface coordinates.

The details of these references systems arc given in the following sections.

3.0 INERTIAL COORDINATES

The B1950 reference frame was used by the Babakin Center, the Flight Control Center, and the Keldish Institute of Applied Mathematics in computing the Phobos Orbiter trajectory, the Phobos and Deimos ephemerides, camera pointing and the Mars and Phobos orientations over time. As seen in Figure 2, the vectors $\bar{r}$, s and t in B1950 define the position of the Phobos Orbiter, the position of Phobos or Deimos relative to Mars, and the position of Phobos or Deimos relative to the Phobos Orbiter, These position vectors **have** the form

$$\bar{t} = \bar{s} - \bar{r} = \begin{bmatrix} s_X \\ s_Y \\ s_Z \end{bmatrix} - \begin{bmatrix} r_X \\ r_Y \\ r_Z \end{bmatrix} = \begin{bmatrix} t_X \\ t_Y \\ t_Z \end{bmatrix} \qquad (1)$$

where t_X, t_Y, t_Z are the position components of $\bar{t}$ along the 131950 coordinate axes $\bar{X}\bar{Y}\bar{Z}$.

4.0 TV POINTING

The pointing and orientation of each camera in 111950 is defined by the 3x3, unitless, rotation matrix $\mathbf{T}^I_{TV}$ which is used to transform a vector from inertial B1950 coordinates to TV camera-fixccl $\bar{m}\bar{n}\bar{l}$ coordinates. $\mathbf{T}^I_{TV}$ is expressed in terms of the angles α_p and δ_p defining the right ascension and declination of a camera optical axis in B1950, and the angle κ_p defining the orientation of the picture as

$$\mathbf{T}^I_{TV} = [\kappa_p]_3\ [90 - \delta_p]_1\ [90 - \alpha_p]_3 = \begin{bmatrix} T_{11} & T_{12} & T_{13} \\ T_{21} & T_{22} & T_{23} \\ T_{31} & T_{32} & T_{33} \end{bmatrix} \tag{2}$$

where the form $[\theta]_i$ represents the following rotation matrices for $i = 1,2,3$

$$[\theta]_1 = \begin{bmatrix} 1 & 0 & 0 \\ 0 & \cos\theta & \sin\theta \\ 0 & -\sin\theta & \cos\theta \end{bmatrix}, \quad [\theta]_2 = \begin{bmatrix} \cos\theta & 0 & -\sin\theta \\ 0 & 1 & 0 \\ \sin\theta & 0 & \cos\theta \end{bmatrix},$$

and

$$[6]3 = \begin{bmatrix} \cos\theta & \sin\theta & 0 \\ -\sin\theta & \cos\theta & 0 \\ 0 & 0 & 1 \end{bmatrix}.$$

From equation 2,

$$\alpha_p = \tan^{-1}(T_{32}/T_{31}) \tag{3}$$

$$\delta_p = \sin^{-1}(T_{33}) \tag{4}$$

$$\kappa_p = -\tan^{-1}(T_{13}/T_{23}) \tag{5}$$

5.0 TV CAMERA COORDINATES

The three orbiter TV cameras, mounted side-by-side as shown in Figure 3, utilized CCD detectors and short focal length, refractor optics, The active image areas of the CCDs arc 6.9 x 9.1 mm and yield 21.2 x 27.9 deg fields-of-view for the 2 wide angle cameras anti a 4. I x 5.2 deg ficlcl-of-view for the narrow angle camera. The cameras WCIC hard mounted to the spacecraft with their optical axes boresighted.

To define the geometry associated with imaging data, a camera-fixed $\bar{m}\bar{n}\bar{l}$ coordinate system (Figures 1 and 4) is defined for each camera with 1 along the optical axis, $\bar{m}$ in the direction of increasing sample number, and $\bar{n}$ compacting the orthogonal, right-handed system and is in the direction of increasing line number. The origins of $\bar{m}\bar{n}\bar{l}$ arc at the optical principal points of each camera, assumed to be at the central pixel.

A spacecraft-ccntcrcd, vector $\bar{p}$ in camera-fixed coordinates is obtained by transforming an inertial vector t in B1950 (eqn. 1) to $\bar{m}\bar{n}\bar{l}$ using the transformation matrix $\mathbf{T}^I_{TV}$ (eqn. 2) by

$$\bar{p} = \begin{bmatrix} p_m \\ p_n \\ p_l \end{bmatrix} = \mathbf{T}^I_{TV} \begin{bmatrix} t_X \\ t_Y \\ t_Z \end{bmatrix} \quad (-\ \mathbf{T}^I_{TV}\ \bar{t} \quad (G)$$

where p_m , p_n, p_l are the vector components of $\hat{\mathbf{p}}$ along the $\bar{\mathbf{m}}\bar{\mathbf{n}}\bar{\mathbf{l}}$ axes. The x,y mm coordinates on the CCD detector, associated with $\hat{\mathbf{p}}$ in $\bar{\mathbf{m}}\bar{\mathbf{n}}\bar{\mathbf{l}}$, are given by

$$\begin{bmatrix} x \\ y \end{bmatrix} = \frac{f}{p_l} \begin{bmatrix} p_m \\ p_n \end{bmatrix} \tag{7}$$

where f is the camera focal length (mm).

Equation 7 assumes that the origin of $\bar{\mathbf{m}}\bar{\mathbf{n}}\bar{\mathbf{l}}$ is at the optical principal point (central pixel) and that there are no optical distortions.

The image coordinates (s for sample number and 1 for line number) within a picture associated with the x, y mm coordinates are given by the following expression

$$\begin{bmatrix} s \\ l \end{bmatrix} = \begin{bmatrix} K_{sx}\ x \\ K_{ly}\ y \end{bmatrix} + \begin{bmatrix} s_0 \\ l_0 \end{bmatrix} \tag{8}$$

where the term K_{sx} has units of samples/mm, K_{ly} has units of lines/nml, and s_0, l_0 is the image location corresponding to the origin of $\bar{\mathbf{m}}\bar{\mathbf{n}}\bar{\mathbf{l}}$. The location uncertainty of any pixel within a CCD detector is $\pm$ 0.001 mm or about 0,05 pixels.

Therefore, the combination of equations 1-8 allows one to take an inertia] vector in 111950 and compute the associated sample and line coordinates within an image. The next section gives the reverse transformation.

6.0 TV TO INERTIAL COORDINATES

Given the s, l image location of the Phobos or Deimos center-of-figure or any other pixel of interest, the inertial direction of a vector associated with that image location can be computed by going through the reverse of equations 1-8. This process involves computing the x, y mm coordinates of the s, 1 coordinates, computing the carncra-fixed $\hat{\mathbf{p}}$ vector associated with x, y, computing the inertial vector $\hat{\mathbf{t}}$ from $\hat{\mathbf{p}}$, and then computing the right ascension and declination of the $\hat{\mathbf{t}}$ vector.

First, the x, y mm coordinates arc computed from the inverse of equation 8

$$\begin{bmatrix} x \\ y \end{bmatrix} \quad \begin{matrix} (s - s_0)/K_{sx} \\ (l - l_0)/K_{ly} \end{matrix} \tag{9}$$

Using the values of x, y and the camera focal length f

$$\hat{p}_m = \frac{x\hat{p}_z}{f} \tag{10}$$

$$\hat{p}_n = \frac{y\hat{p}_z}{f} \tag{11}$$

$$\hat{p}_l = (1 + x^2/f^2 + y^2/f^2)^{-\frac{1}{2}} \tag{12}$$

Then the unit vector $\hat{\mathbf{p}}$ is

$$\hat{\mathbf{p}} = \begin{bmatrix} \hat{p}_m \\ \hat{p}_n \\ \hat{p}_l \end{bmatrix} \tag{13}$$

and the unit vector $\hat{\mathbf{t}}$ is

$$\hat{\mathbf{t}} = \mathbf{T}_I^{TV}\,\hat{\mathbf{p}} = \begin{bmatrix} \hat{t}_X \\ \hat{t}_Y \\ \hat{t}_Z \end{bmatrix} \tag{14}$$

where $\mathbf{T}_I^{TV}$ is the transpose of $\mathbf{T}_{TV}^I$ in equation 2. Finally, from equation 14

$$\alpha_t = \tan^{-1}(\hat{t}_Y / \hat{t}_X) \tag{15}$$

$$\delta_t = \sin^{-1}(\hat{t}_Z) \tag{16}$$

where α_t, δ_t are the inertial coordinates of right ascension and declination in B1950 associated with the $s, 1$ image coordinates. The α_t, δ_t coordinates can be considered as astrometric (FK-4) position angles in B1950 since the effects of stellar and elliptic aberration are far below the angular resolution of even the narrow angle camera ($\sim$ 1 arc-min) and the one-way light time to Mars, Phobos and Deimos are much less than 1 second.

7.0 BODY-FIXED COORDINATES

The orientation of a planetary body in inertial space is defined by the right ascension, α_b, and declination, δ_b, of its instantaneous spin axis, and its prime meridian angle, W (Davies, *et. al.* 1 983). The 3x3, unitless rotation matrix $\mathbf{T}_{BF}^I$ from inertia B1950 to a body-fixed coordinate system has the exact same form as eqn. 2 and is given by

$$\mathbf{T}_{BF}^I = [W]_3\,[90 - \delta_b]_1\,[90 + \alpha_b]_3 \tag{17}$$

Given the spacecraft event time of the TV exposure mid-point in Julian Ephemeris Date, the angles α_b, δ_b, and W are computed in units of degrees from

For Mars:

$$\alpha_b = 317.342 - 0.108T \tag{18}$$

$$\delta_b = 52.711 - 0.0617T \tag{19}$$

$$W_b = 11.504 + 350.8919830d \tag{20}$$

where

$$d = \text{Julian Ephemeris Date} - 2433282{,}5 \text{ Julian days past B1950} \tag{21}$$

and

$$T = d/36525 \text{ Julian Centuries past B1 950} \tag{22}$$

For Phobos:

$$\alpha_b = 317.31 - 0.108T + 1.79 \sin K \tag{23}$$

$$\delta_b = 52.70 - 0.061 - 1.08 \cos K \tag{24}$$

$$W_b = 270.23 + 1128.844479d + 0.6644 \times 10^{-8} d^2 - 1.42 \sin K - 0.8 \sin Q \tag{25}$$

where

$$K = 207.34 - 0.435764d \tag{26}$$

and

$$Q = 88.80 + 1128.409670d + 0.6644 \times 10^{-8} d^2 \tag{27}$$

For Deimos:

$$\alpha_b = 316.29 - 0.1082' + 2.98 \sin K \tag{28}$$

$$\delta_b = 53.33 - 0.0617' - 1.78 \cos K \tag{29}$$

$$W_b = 69.97 + 285.161903d - 0.3901 \times 10^{-9} d^2 - 2.39 \sin K + 0.27 \sin(K - 225) \tag{30}$$

where

$$K = 24.63 - 0.018151d \tag{31}$$

A point on the surface of Mars, Phobos and Deimos is defined by its body-fixed, cartographic latitude ϕ, longitude λ (positive west), and its body-centered radius u. This surface point can then be transformed from body-fixed coordinates to a body-centered, inertial vector $\bar{\mathbf{u}}$ in B1950 coordinates using

$$\bar{\mathbf{u}} = \mathbf{T}_I^{BF} u \begin{bmatrix} \cos\phi \cos\lambda \\ \cos\phi \sin\lambda \\ \sin\phi \end{bmatrix} \tag{32}$$

where $\mathbf{T}_I^{BF}$ is the transpose of $\mathbf{T}_{BF}^I$ in equation 17 which is evaluated at the mid-point of the exposure for the planetary body of interest. This vector $\bar{\mathbf{u}}$ can be translated from body-centered to the spacecraft center and transformed into TV camera-fixed coordinates using

$$\bar{\mathbf{p}} = \mathbf{T}_{TV}^I (\mathbf{t} + \mathbf{u}) \tag{33}$$

Equations 7 and 8 can then be used to compute the image coordinates associated with the body-fixed point on the surface of Mars, Phobos or Deimos.

8.0 TV MODEL AND ANGLE VALUES

Table 1 lists the parameter values associated with the astrometric models of the cameras. These values were originally determined from ground calibrations. However, flight images of Deimos, Jupiter and a 1st magnitude star (Aldebaran) were used to check the

wide-angle camera focal lengths. These pictures showed that the Channel 3 focal length was 0.18 mm longer than nominal and caused its pictures to be slightly out-of-focus.

All 3 CCD's produced raw images where the pixels were not square! (O. 18 x 0.24 mm) and had an aspect ration of 3:4. Processed images were derived from the raw images to have square pixels (0.024 x 0.024 mm) giving a 1:1 aspect ratio as indicated by the values of K_{sx} and K_{sy} having the same value in Table 1 for the processed images.

In Tables 2-5, "PICNO" is used to identify each image, and "SAT" is used to identify the principal planetary body imaged in the picture, PICNO has the form DDDNNNC where DDD indicates the number of days after launch, NNN represents the picture number (001 - 015) taken on clay DDD, and C represents the TV Channel ID (C = 1,2 or 3). SAT is "I" for Phobos, "D" for Deimos, and "M" for Mars. Additionally, all position vectors have units of km and all angles have units of deg, with B1950 being used as the inertial reference system.

q'able 2 lists the camera pointing angles (α_p, δ_p) as they were derived from telemetered Inertial Measurement Unit (IMU) data of the orbiters" attitude. These angles have an accuracy of about 3 arc-min (1 σ). Additional pointing angles arc listed which were derived from registering the observed image locations of Mars and Phobos limbs, Mars and Phobos landmarks, and the centers of the near point source images of Jupiter, Deimos and a few stars to their computed directions in inertial space. This registered set of pointing angles has absorbed not only pointing errors, but, also trajectory errors, satellite ephemeris errors, center-of-mass offsets from cent cr-of-figure, et c.

'1'able 3 lists the position vectors of the Orbiter with respect to Mars (r_X, r_Y, r_Z), of Phobos or Deimos with respect to the Orbiter (t_X, t_Y, t_Z), and of the Sun with respect to Orbiter (Sun_X, Sun_Y, Sun_Z). These are "true" position vectors with the effects of 1-way light time and stellar aberration ignored. The use of these vectors with the set of registered pointing angles allows one to transform accurately between image coordinates and the inertial B1950 coordinate system.

Table 4 lists the pole and prime meridian angles of Mars $(\alpha_{Mars}, \delta_{Mars}, W_{Mars})$ and of Phobos or Deimos $(\alpha_{SAT}, \delta_{SAT}, W_{SAT})$. For the two pictures where SAT = M, the pole and prime meridian angles of Phobos arc given. These values represent the evaluation of equations 18 - 31 at the times of each picture. The use of these angles with the vectors and angles in the previous two Tables allows one to transform accurately between image coordinates and the bocly-fixed coordinates of Mars, Phobos and Deimos.

l'able 5 lists the the spacecraft timetag (JED - Julian Ephemeris Date), the inertial angles of Phobos or Deimos (α_t, δ_t) for the TV images taken during the Mars orbital mission phase, and the 1 sigma uncertainty (σ) of the inertial angles (Kolyuka, *et.* al. 1991). The level of accuracy associated with these inertial angles increases when Mars limb or landmarks, Jupiter, or star images were available in the pictures to improve the inertia] camera pointing derived from the telemetered I MU data.

9.0 ACKNOWLEDGE MENTS

Appreciation is expressed to Drs. N. Ivanov, V. Tikhonov and Y. Kolyuka of the Flight Control Center, Dr. O. Papkov of the Babakin Center, Drs. E. Akim and V. Stepanyants of the Keldish institute of Applied Mathematics, Drs. G. Avanesov, V. Heifetz and B. Zhukov of the Institute of Space Research and Dr. J, Berthias of the Jet Propulsion laboratory who were instrumental in supporting the development of the derived models as well as providing the data in the tables. The results presented were developed jointly with the Soviet institutions and the Jet Propulsion] Laboratory, California Institute of Technology, Pasadena, California under contract to the National Aeronautics and Space Administration in support of the US Participating Scientist Program, the Navigation Ancillary Information Facility, and the Planetary Data System.

10.0 REFEREN CES

Davies, M., Abalakin, V., Lieske, J., Seidelmann, P., Sinclair, A., Sinzi, A., Smith, B., and Tjuflin, Y., Report of the IAU Working Group on Cartographic Coordinates and Rotational Elements of the Planets and Satellites: 1982. *Celestial Mechanics*, 29, pp. 309-321, 1983.

Kolyuka, U., Akim, E., Avanesov, G., Duxbury, T., Heifetz, V., Ivanov, N., Tikhonov, V., Papkov, 0., Polyakov, V. and Zhukov, B., Phobos and Deimos Astrometric Observations from the Phobos Mission, *Astronomy and Astrophysics*, *21, 43, pp. 213-221,* February, 1991.

Figure Captions

Figure 1. TV, Celestial, Inertial and Dody-fixed Coordinate Systems

Figure 2. Phobos Orbiter Television Camera System

Figure 3. The Mars-centered, B1950 Inertial Coordinate System

Figure 4. TV Image Coordinates

Table 1. Phobos Orbiter 2 Television Camera Parameters

Parameter	Camera 1	Camera 2	Camera 3
Raw Images:			
f	18.500	100.000	18.683
K_{sx}	55.556	55.556	55.556
K_{ly}	41.667	41.667	41.667
s_0	253.000	253.000	253.000
l_0	144.500	144.500	144.500
Processed Images:			
f	18.500	100.000	18.683
K_{sx}	55.556	55.556	55.556
K_{ly}	55.556	55.556	55.556
s_0	253.000	253.000	253.000
l_0	192.500	192.500	192.500

2. Camera Pointing / Orientation

PHOTO	α_p	υ_p	κ_p	α_p	υ_p	κ_p	$\Delta\alpha_p$	$\Delta\upsilon_p$	$\Delta\kappa_p$
2230011	12.946	-26.432	280.484	12.983	-26.420	280.485	0.037	0.012	0.001
2230022	12.628	-26.883	281.126	12.724	-26.886	281.126	0.096	-0.003	0.000
2230033	12.050	-27.316	280.945	12.365	-27.180	280.946	0.315	0.136	0.001
2230041	26.453	-20.468	286.143	26.652	-20.433	286.144	0.199	0.035	0.001
2230052	26.669	-20.608	286.528	26.741	-20.548	286.529	0.072	0.060	0.001
2230063	26.658	-20.740	286.329	26.945	-20.571	286.329	0.287	0.169	0.000
2230071	40.364	-11.393	289.952	40.525	-11.313	289.954	0.161	0.080	0.002
2230082	40.312	-11.382	290.359	40.354	-11.381	290.359	0.042	0.001	0.000
2290011	48.168	17.190	287.863	48.187	17.203	287.865	0.019	0.013	0.002
2290022	48.771	17.192	288.324						
2290033	48.817	17.076	288.440	48.817	17.076	288.440	0.000	0.000	0.000
2290041	57.026	18.777	286.005	57.001	18.792	286.006	-0.025	0.015	0.001
2290052	56.761	18.786	287.039	56.742	18.797	287.039	-0.019	0.011	0.000
2290063	56.382	18.836	287.052	56.382	18.836	287°52	0.000	0.000	0.000
2290071	58.939	19.544	285.414	58.902	19.547	285.414	-0.037	0.003	0.000
2290082	59.034	19.326	286.270	58.986	19.334	286 27°	-0.048	0.008	0.000
2290093	59.159	19.298	286.228	59.138	19.292	286.236	-0.021	-0.006	0.008
2290101	67.722	21.465	282.322	67.655	21.462	282.319	-0.067	-0.003	-0.003
2290112	67.697	21.432	283.253						
2290123	67.764	21.483	283.177	67.748	21.477	283.138	-0.016	-0.006	-0.°39
2290143									
2290153									
2300012	116.393	26.597	262.075	116.163	26.524	261.790	-0.230	-0.073	-0.285
2300021	115.894	26.789	262.340	115.762	26.808	262.341	-0.132	0.019	0.001
2300033	115.578	26.708	262.843	115.387	26.731	262.845	-0.191	0.023	0.002
2300042	118.655	22.949	261.912	118.398	22.847	261.921	-0.257	-0.102	0.009
2300051	118.547	23.057	261.464	118.252	23.078	261.468	-0.295	0.021	0.004
2300063	118.548	22.978	261.808	118.253	22.999	261.812	-0.295	0.021	0.004
2300072	117.112	18.303	262.992	116.795	18.202	263.005	-0.317	-0.101	0.013
2300081	117.033	18.503	262.615	116.702	18.456	262.623	-0.331	-0.047	0.008
2300093	117.055	18.465	263.040	116.703	18.375	263.048	-0.352	-0.090	0.008
2300102	108.115	11.967	267.304	107.744	11.828	267.316	-0.371	-0.139	0.012
2300111	108.134	12.114	266.922	107.721	12.068	266.931	-0.413	-0.046	0.009
2300123	108.247	11.999	267.355	107.752	11.922	267.368	-0.495	-0.077	0.013
2300132	103.825	11.218	268.801	103.494	11.100	268.815	-0.331	-0.118	0.014

Table 2. Camera Pointing / Orientation - Cont.

2300141	103.789	11.256	268.475	103.449	11.281	268.488	-0.340	0.025	0.013
2300153	103.855	11.201	268.959	103.513	11.137	268.975	-0.342	-0.064	0.016
2550012	106.053	32.879	263.401	105.956	33.056	263.260	-0.097	0.177	-0.141
2550021	105.735	32.639	263.309	105.640	32.969	263.310	-0.095	0.330	0.001
2550033	105.719	32.124	263.885	105.624	32.399	263.886	-0.095	0.275	0.001
2550042	107.212	32.093	263.707	107.124	32.244	264.302	-0.088	0.151	0.595
2550051	107.136	32.164	263.296	107.164	32.418	263.290	0.028	0.254	-0.006
2550063	107.207	32.236	263.653	107.265	32.487	263.646	0.058	0.251	-0.007
2550072	100.121	30.246	266.479	100.107	30.359	266.505	-0.014	0.113	0.026
2550081	99.676	30.510	266.416	99.670	30.700	266.410	-0.006	0.190	-0.006
2550093	99.374	30.519	267.106	99.343	30.632	267.099	-0.031	0.113	-0.007
2550102	85.516	23.574	272.784	85.641	23.560	272.722	0.125	-0.014	-0.062
2550111	85.558	23.905	272.277	85.669	23.898	272.315	0.111	-0.007	0.038
2550132	72.908	17.310	275.971	73.103	17.155	275.926	0.195	-0.155	-0.045
2550141	72.894	17.274	275.640	73.143	17.220	275.669	0.249	-0.054	0.029
2550153	73.105	16.991	276.090	73.359	16.829	276.108	0.254	-0.162	0.018
MEAN							-0.069	0.028	0.006
SIGMA							0.206	0.116	0.103

Table 3. Inertial Position Vectors

FIONO	SAT	r_X	r_Y	r_Z	t_X	t_Y	t_Z	Sun_X	Sun_Y	Sun_Z
2230011	P	-3865.9	-8681.5	-2055.0	704.7	152.6	-374.1	-13705894.	-212344944.	-97103824.
2230022	P	-3744.0	-8716.0	-2141.3	710.5	163.1	-374.0	-13704198.	-212345168.	-97103968.
2230033	P	-3617.5	-8749.5	-2228.5	716.3	174.3	-373.7	-13702451.	-212345376.	-97104112.
2230041	P	-1219.9	-8954.9	-3673.0	797.9	401.0	-338.8	-13671111.	-212349328.	-97106760.
2230052	P	-1081.3	-8944.2	-3745.5	800.8	415.0	-335.1	-13669365.	-212349536.	-97106912.
2230063	P	-942.5	-8931.1	-3817.0	803.5	429.0	-331.3	-13667618.	-212349760.	-97107056.
2230071	P	1559.4	-8307.4	-4916.7	813.6	694.1	-228.8	-13636228.	-212353712.	-97109704.
2230082	P	1692.8	-8253.3	-4965.1	811.9	708.8	-221.5	-13634531.	-212353920.	-97109848.
2290011	D	1840.7	-8185.4	-5022.1	14639.7	24850.2	4007.3	-1554841.	-213564464.	-97987944.
2290022	D	1973.2	-8127.0	-5068.1	14451.8	24849.8	4110.6	-1553274.	-213564656.	-97988008.
2290033	D	2105.1	-8066.5	-5112.9	14264.1	24847.1	4212.8	-1551706.	-213564848.	-97988064.
2290041	D	2589.4	-7825.6	-5267.9	13570.8	24817.6	4580.6	-1545891.	-213565568.	-97988296.
2290052	D	2722.5	-7754.0	-5307.9	13379.0	24803.9	4679.7	-1544274.	-213565776.	-97988368.
2290063	D	2851.1	-7682.5	-5345.4	13193.1	24788.5	4774.6	-1542703.	-213565968.	-97988432.
2290071	D	3321.3	-7401.5	-5472.9	12507.8	24712.3	5115.1	-1536874.	-213566736.	-97988696.
2290082	D	3450.0	-7319.0	-5505.1	12318.7	24686.0	5206.5	-1535253.	-213566960.	-97988776.
2290093	D	3574.2	-7237.0	-5535.0	12135.5	24658.3	5293.9	-1533678.	-213567168.	-97988848.
2290101	D	4027.4	-6917.4	-5634.2	11460.9	24537.5	5606.6	-1527820.	-213567968.	-97989136.
2290112	D	4153.4	-6822.6	-5658.9	11271.5	24498.2	5691.8	-1526158.	-213568192.	-97989224.
2290123	D	4272.1	-6730.8	-5681.0	11092.2	24458.9	5771.4	-1524577.	-213568416.	-97989304.
2290143	M	5451.7	-5673.3	-5826.2	-6899.2	-2978.7	2347.7	-1506730.	-213569776.	-97990408.
2290153	M	5559.9	-5560.9	-5832.3	-6867.7	-3084.5	2276.9	-1504981.	-213569920.	-97990520.
2300012	P	-2792.0	-8903.7	-2765.9	-167.8	346.1	201.9	398509.	-213707616.	-98104720.
2300021	P	-2663.1	-8919.7	-2846.2	-167.6	341.6	197.8	400209.	-213707728.	-98104824.
2300033	P	-2529.8	-8933.8	-2928.0	-167.3	337.2	193.7	401958.	-213707856.	-98104928.
2300042	P	-1170.0	-8946.7	-3698.8	-158.5	301.3	154.4	419406.	-213709040.	-98105944.
2300051	P	-1031.4	-8935.1	-3771.1	-157.1	298.6	150.7	421156.	-213709168.	-98106040.
2300063	P	-892.5	-8921.3	-3842.4	-155.6	296.0	147.0	422905.	-213709280.	-98106144.
2300072	P	503.4	-8655.6	-4497.8	-138.1	278.3	114.5	440403.	-213710480.	-98107160.
2300081	P	642.8	-8616.5	-4557.2	-136.1	277.3	111.6	442153.	-213710592.	-98107264.
2300093	P	782.1	-8575.2	-4615.4	-134.1	276.5	108.9	443902.	-213710720.	-98107368.
2300102	P	3725.3	-7134.4	-5568.6	-92.7	291.3	73.6	482297.	-213713344.	-98109600.
2300111	P	3851.1	-7046.0	-5596.3	-91.3	293.3	73.2	484047.	-213713456.	-98109696.
2300123	P	3975.9	-6955.8	-5622.5	-89.9	295.3	73.0	485797.	-213713584.	-98109800.
2300132	P	5598.3	-5519.0	-5835.0	-79.6	330.9	81.6	510243.	-213715248.	-98111216.

Table 3. Inertial Vectors Cont.)

PRNO	SAT	r_x	r_y	r_z	t	t	t_z	Sun_x	Sun_y	Sun
2300141	P	5701.5	-5407.9	-5838.9	-79.6	333.7	83.0	511943.	-213715360.	-98111320.
2300153	P	5806.4	-5292.1	-5841.5	-79.7	336.7	84.6	513693.	-213715472.	-98111416.
2550012	P	-6479.6	-6830.4	317.9	-61.6	221.2	146.9	49993736.	-212189488.	-98736608.
2550021	P	-6394.6	-6920.0	223.9	-61.8	219.1	145.8	49995396.	-212189264.	-98736552.
2550033	P	-6305.3	-7010.4	127.0	-61.8	217.0	144.6	49997104.	-212189040.	-98736496.
2550042	P	-4877.6	-8053.5	-1220.4	-52.9	189.2	123.8	50021040.	-212185920.	-98735704.
2550051	P	-4767.5	-8109.9	-1312.2	-51.7	187.6	122.1	50022700.	-212185712.	-98735648.
2550063	P	-4652.8	-8165.6	-1406.4	-50.3	185.9	120.4	50024408.	-212185488.	-98735592.
2550072	P	-2929.1	-8698.8	-2669.1	-23.9	170.4	95.7	50048292.	-212182368.	-98734800.
2550081	P	-2798.5	-8719.1	-2754.7	-21.5	169.9	93.9	50050004.	-212182144.	-98734744.
2550093	P	-2667.1	-8737.0	-2839.5	-19.1	169.5	92.2	50051712.	-212181920.	-98734688.
2550102	P	-771.0	-8734.5	-3933.2	18.4	173.2	71.0	50075596.	-212178800.	-98733896.
2550111	P	-632.5	-8716.3	-4004.1	21.2	174.2	69.8	50077304.	-212178576.	-98733840.
2550132	P	1456.4	-8159.7	-4931.4	62.7	200.0	57.5	50103092.	-212175216.	-98732984.
2550141	P	1573.6	-8112.6	-4975.5	64.9	202.0	57.3	50104556.	-212175024.	-98732936.
2550153	P	1709.9	-8055.6	-5025.6	67.4	204.4	57.0	50106264.	-212174800	-98732880

Table 4. Spin Axis and Prime Meridian Angles

PICNO	SAT	α_{Mars}	δ_{Mars}	W_{Mars}	α_{SAT}	δ_{SAT}	W_{SAT}
2230011	P	317.639	52.862	112.908	319.144	52.862	22.723
2230022	P	317.639	52.862	113.204	319.144	52.862	23.681
2230033	P	317.639	52.862	113.510	319.144	52.862	24.667
2230041	P	317.639	52.862	118.986	319.144	52.862	42.395
2230052	1'	317.639	52.862	119.291	319.144	52.862	43.385
2230063	P	317.639	52.862	119.596	319.144	52.862	44.375
2230071	1'	317.639	52.862	125.081	319.144	52.861	62.197
2230082	1'	317.639	52.862	125.378	319.144	52.861	63.161
2290011	D	317.639	52.862	74.092	318.688	54.455	175.807
2290022	D	317.639	52.862	74.388	318.688	54.455	176.048
2290033	D	317.639	52.862	74.685	318.688	54.455	176.288
2290041	D	317.639	52.862	75.783	318.688	54.455	177.181
2290052	D	317.639	52.862	76.089	318.688	54.455	177.429
2290063	D	317.639	52.862	76.385	318.688	54.455	177.670
2290071	D	317.639	52.862	77.484	318.688	54.455	178.563
2290082	D	317.639	52.862	77.789	318.688	54.455	178.811
2290093	D	317.639	52.862	78.086	318.688	54.455	179.052
2290101	D	317.639	52.862	79.186	318.688	54.455	179.947
2290112	D	317.639	52.862	79.498	318.688	54.455	180.200
2290123	D	317.639	52.862	79.795	318.688	54.455	180.441
2290143	M	317.639	52.862	82.908	319.152	52.812	35.127
2290153	M	317.639	52.862	83.213	319.152	52.812	36.116
2300012	}'	317.639	52.862	55.230	3]9.]53	52.804	24.179
2300021	P	317.639	52.862	55.527	319.153	52.804	25.136
2300033	P	317<639	52.862	55.832	319.153	52.804	26.122
2300042	1'	317.639	52.862	58.875	319.153	52.804	35.962
2300051	1'	317.639	52.862	59.181	319.153	52.804	36.950
2300063	P	317.639	52.862	59.486	319.153	52.804	37.938
2300072	P	317.639	52.862	62.538	319.153	52.804	47.831
2300081	P	317.639	52.862	62.843	319.153	52.804	48.822
2300093	1'	317.639	52.862	63.148	319.153	52.804	49.812
2300102	P	317.639	52.862	69.845	319.153	52.804	71.5$37
2300111	P	317,639	52.862	70.150	319.153	52.804	72.580
2300123	P	317.639	52.862	70.456	319.153	52.804	73.575
2300132	1'	317.639	52.862	74.720	319.153	52.804	87.470
2300141	P	317.639	52.862	75.016	319.153	52.804	88.43"/
2300153	P	317.639	52.862	75.322	319.153	52.804	89.432
2550012	P	317.638	52.862	133.922	319.144	52.599	352.905
2550021	P	317,638	52.862	134.219	319.144	52.599	353.852
2550033	1'	317,638	52.862	134.524	319.144	52.599	354.828
2550042	P	317.638	52.862	138.797	319.144	52.599	8.514
2550051	P	317.638	52.862	139.093	319.144	52.599	9.466
2550063	P	317.638	52.862	139.399	319.144	52.599	10.445
2550072	P	317.638	52.862	143.663	319.144	52.599	24.154
2550081	1'	317.638	52.862	143.968	319.144	52.599	25.137
2550093	P	317.638	52.862	144.273	319.144	52.599	26.120
2550102	)'	317.638	52.862	148.537	319.144	52.599	39.880
2550111	P	317.638	52.862	148.842	319.144	52.599	40.866
2550132	1'	317.638	52.862	153.447	319.144	52.599	55.774
2550141	P	317.638	52.862	153.708	319.144	52.599	56.623
2550153	P	317.63$	52.862	154.013	319.144	52.599	57.613

Table 5. Astrometric Angles

PICNO	SAT	JED	α_t	δ_t	σ
2230011	P	2447579.025093	12.176	-27.435	0.12
2230022	P	2447579.025938	12.837	-27.156	0.08
2230033	P	2447579.026807	13.357	-27.019	0.12
2230041	1'	2447579.042414	26.483	-20.816	0.12
2230052	P	2447579.043284	27.322	-20,444	0.08
2230063	P	2447579,044154	27,810	-20.153	0.12
2230071	p	2447579.059785	40.305	-12.153	0.12
2230082	P	2447579.060630	41.081	-11,614	0.08
2290011	D	2447585.070212	59.510	7.918	0.04
2290033	D	2447585.071902	60.195	8.334	0.04
2290041	D	2447585.075033	61.317	9.235	0.04
2290063	D	2447585.076748	61.957	9.624	0.04
2290071	D	2447585.079879	63.110	10.479	0.04
2290093	D	2447585.081594	63.778	10.893	0.04
2290101	D	2447585.084731	64.914	11.709	0.04
2290123	D	2447585.086464	65.574	12.104	0.04
2300012	J'	2447586.042416	116.086	27.766	0.08
2300021	P	2447586.043261	116.267	27.447	0.12
2300033	I'	2447586.044131	116.581	27.205	0.12
2300042	I'	2447586.052804	117.998	24.491	0.08
2300051	P	2447586.053674	118.048	24.043	0.12
2300063	P	2447586.054544	118.037	23.713	0.12
2300072	P	2447586.063242	116,701	20.327	0.08
2300081	P	2447586.064111	116.469	19.914	0.12
2300093	P	2447586.064981	116.222	19.598	0.12
2300102	P	2447586.084067	108.028	13.675	0.08
2300111	P	2447586.084937	107.709	13.459	0.12
2300123	P	2447586.085806	107.438	13.382	0.12
2300132	P	2447586.097959	103.859	13.602	0.08
2300141	P	2447586.098804	103.756	13.581	0.12
2300153	P	2447586.099673	103.659	)3.808	0.12
2550012	P	2447610.889641	105,668	32.422	0.08
2550021	P	2447'610.890486	105.833	32.298	0.12
2550033	P	2447610.891356	105.988	32.377	0.12
2550042	1'	2447610.903533	105.716	32.086	0.08
2550051	r'	2447610.904378	105.384	31.855	0.12
2550063	P	2447610.905247	105.096	31.752	0.12
2550072	P	2447610.917400	97.993	28.960	0.08
2550081	P	2447610.918269	97.232	28.551	0.12
2550093	P	2447610.919139	96.471	28.286	0,12
2550102	P	2447610.931291	83.829	22.198	0.08
2550111	P	2447610.932161	82.953	21,697	0.12
2550132	I'	2447610.945283	72.389	15.509	0.08
2550141	P	2447610.946028	71.939	15.160	0.12
2550153	I'	2447610.946898	71.500	14.989	0.12

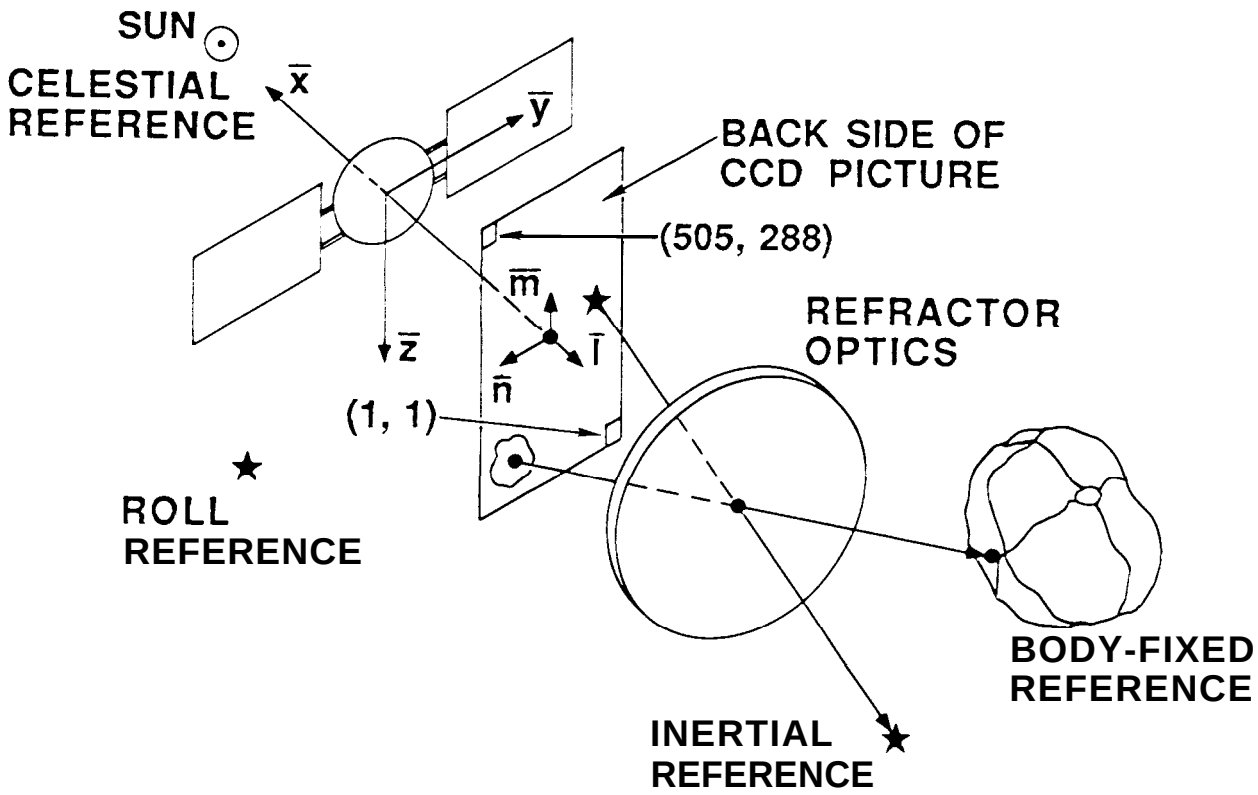

TV Models Figure 1

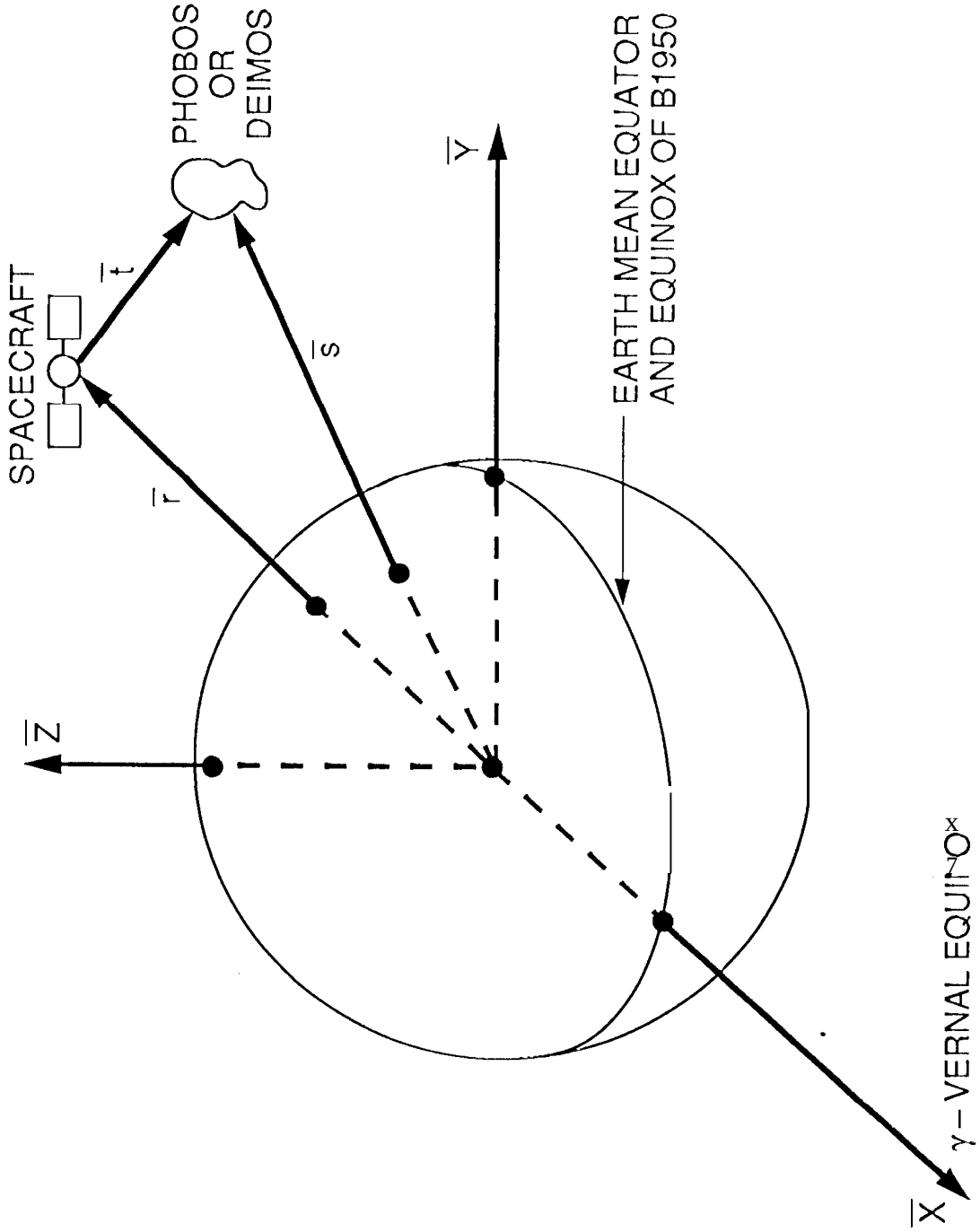
SPACECRAFT
PHOBOS
OR
DEIMOS
$\bar{t}$
$\bar{r}$
$\bar{s}$
$\bar{Y}$
$\bar{Z}$
$\bar{X}$
EARTH MEAN EQUATOR
AND EQUINOX OF B1950
γ – VERNAL EQUINOX

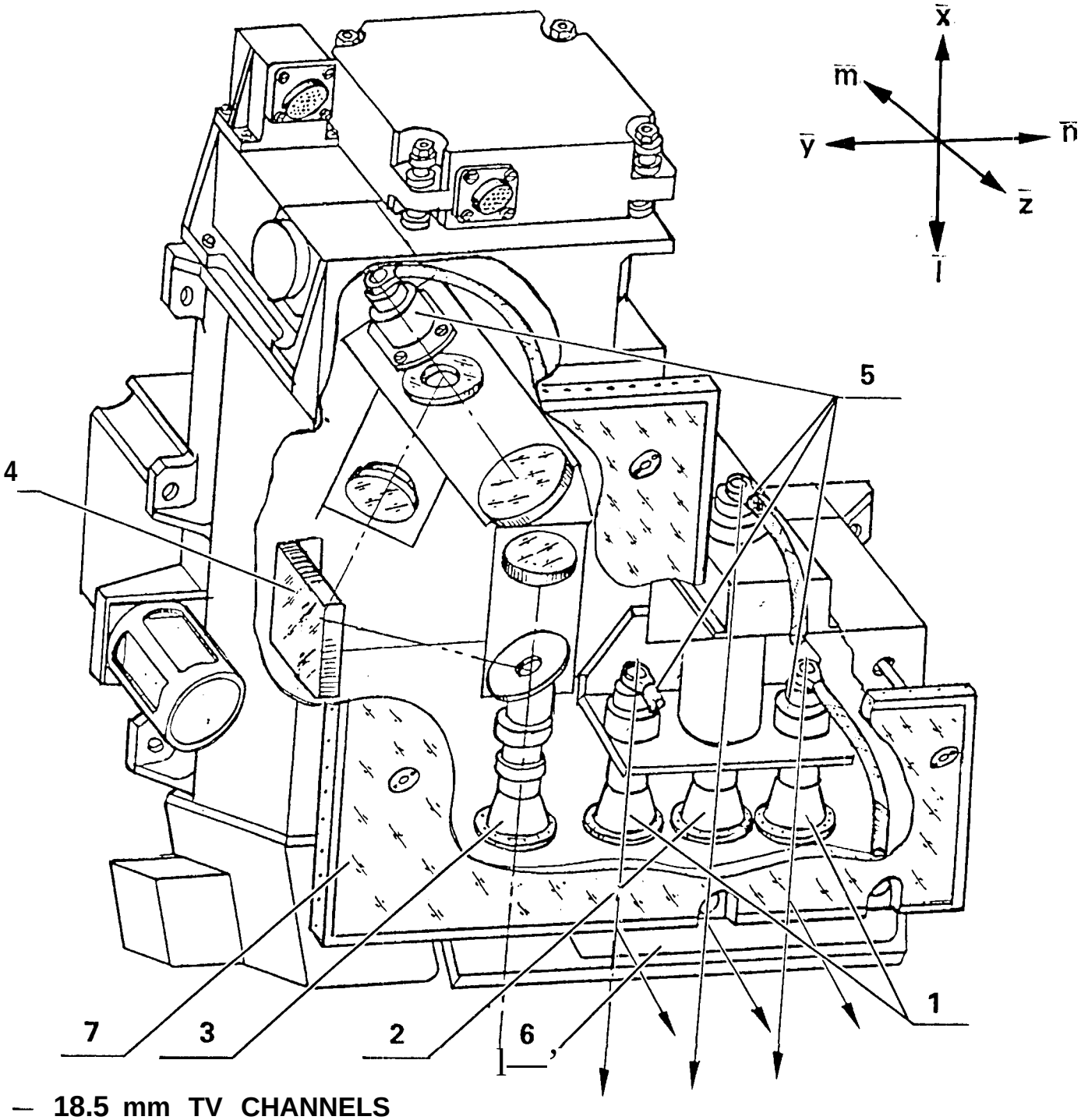

1 — 18.5 mm TV CHANNELS
2 — 100 mm TV CHANNELS
3 — SPECTROMETER CHANNEL
4 — DIFFRACTION GRID
5 — CCD's
6 — MIRROR
7 — RADIATOR

(B)

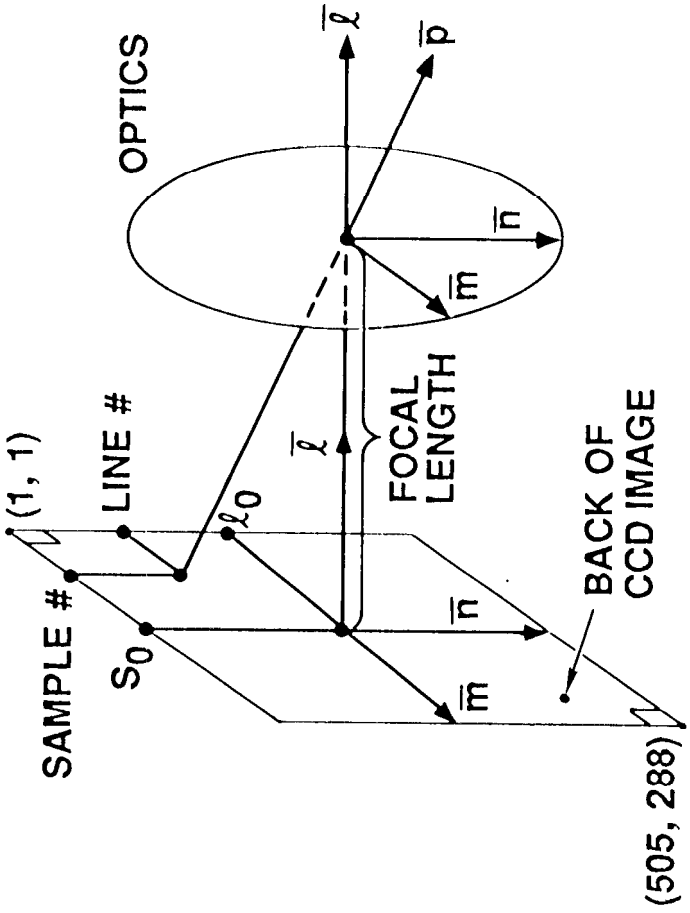
OPTICS
$\bar{\ell}$
$\bar{p}$
$\bar{n}$
$\bar{m}$
FOCAL LENGTH
$\bar{\ell}$
ℓ_0
(1, 1)
LINE #
SAMPLE #
S_0
$\bar{n}$
$\bar{m}$
BACK OF CCD IMAGE
(505, 288)

DATE: _____

FOREIGN PROGRAMMATIC & FOREIGN CONFERENCE TRAVEL FORECAST

ALD OFFICE: TDO ___ OSS I ___ TAP ___ F P OTDA ___ S S S

PERIOD: _____ THROUGH _____

1. TRAVELER: Oliver Cardwell SECTION: 3 2 6 DATE(S): 9/18 - 10/12

2. HAS TRAVELER TAKEN/SCHEDULED ANY OTHER FOREIGN CONFERENCE TRAVEL THIS CALENDAR YEAR: NO ✓ YES ___ DATE: _____

3. DESTINATION - CITY & COUNTRY: Hotien, NW China with Programatic stop in Perth Australia on the return trip OSTDS CODE: (TDA ONLY) _____

4. JPL ACCOUNT CODES(S): 690-9.00 80-0-3260 TASK ORDER NO. (S): _____ NASA ACC'T CODE(S) _____

5. EST. TOTAL COST (INCL. SALARY): 8,000 HAS THIS TRAVEL BEEN PREVIOUSLY FORECASTED? NO ___ YES ✓ DATE: _____

6. HAS SPONSOR APPROVAL BEEN OBTAINED? (TAP ONLY) NO ___ YES ✓ ___ VERBALLY? ___ LETTER/TWX? ___ DATE: _____

7. PROJECT/PROGRAM NAME: SIR - C

8. ORG/FACILITY/PERSON TO BE VISITED: (PROGRAMMATIC TRAVEL ONLY) _____

9. PURPOSE OF TRIP: Field Research in N.W. China and meetings with collaborators in Australia

10. CONFERENCE & SPONSOR! (CONFERENCE TRAVEL ONLY) _____

11. TITLE OF PAPER: (CONFERENCE TRAVEL ONLY) _____ ABSTRACT DUE DATE: _____

12. EXPLANATION/JUSTIFICATION: (PROGRAMMATIC OR CONFERENCE TRAVEL WERE NO PAPER IS PRESENTED) _____