ULTRASTABLE REFERENCE FREQUENCY DISTRIBUTION UTILIZING A FIBER OPTIC LINK

M.D. Calhoun and P.F. Kuhnle

California institute of Technology

Jet Propulsion Laboratory

Pasadena, California

OBJECTIVE

- PROVIDE HYDROGEN MASER PERFORMANCE AT THE NASA/JPL DEEP SPACE NETWORK (DSN) REMOTE ANTENNAS
- SUPPLY STATE-OF-THE-ART STABILITY AND SPECTRAL PURITY FOR THE X-BAND TRANSMITTER AND RECEIVER LOCAL OSCILLATOR
- USE UNCOMPENSATED FIBER OPTIC SYSTEM
- APPLICATIONS:
  - GRAVITATIONAL WAVE EXPERIMENTS
  - OUTER PLANET OCCULTATION AND RING EXPERIMENTS
  - VERY LONG BASELINE INTERFEROMETRY (VLBI)

APPROACH

- USE SINGLE MODE, LOW TEMPERATURE COEFFICIENT FIBER OPTIC CABLE
- USE ORTEL MODULAR FIBER OPTIC TRANSMITTER AND RECEIVER
- BURY CABLE 1.5 METERS BETWEEN CONTROL ROOM AND ANTENNA PEDESTAL TO REMOVE DIURNAL VARIATIONS
  - CABLE LENGTH APPROXIMATELY 800 METERS
    - 700 METERS BURIED
    - 100 METERS EXPOSED

BLOCK DIAGRAM

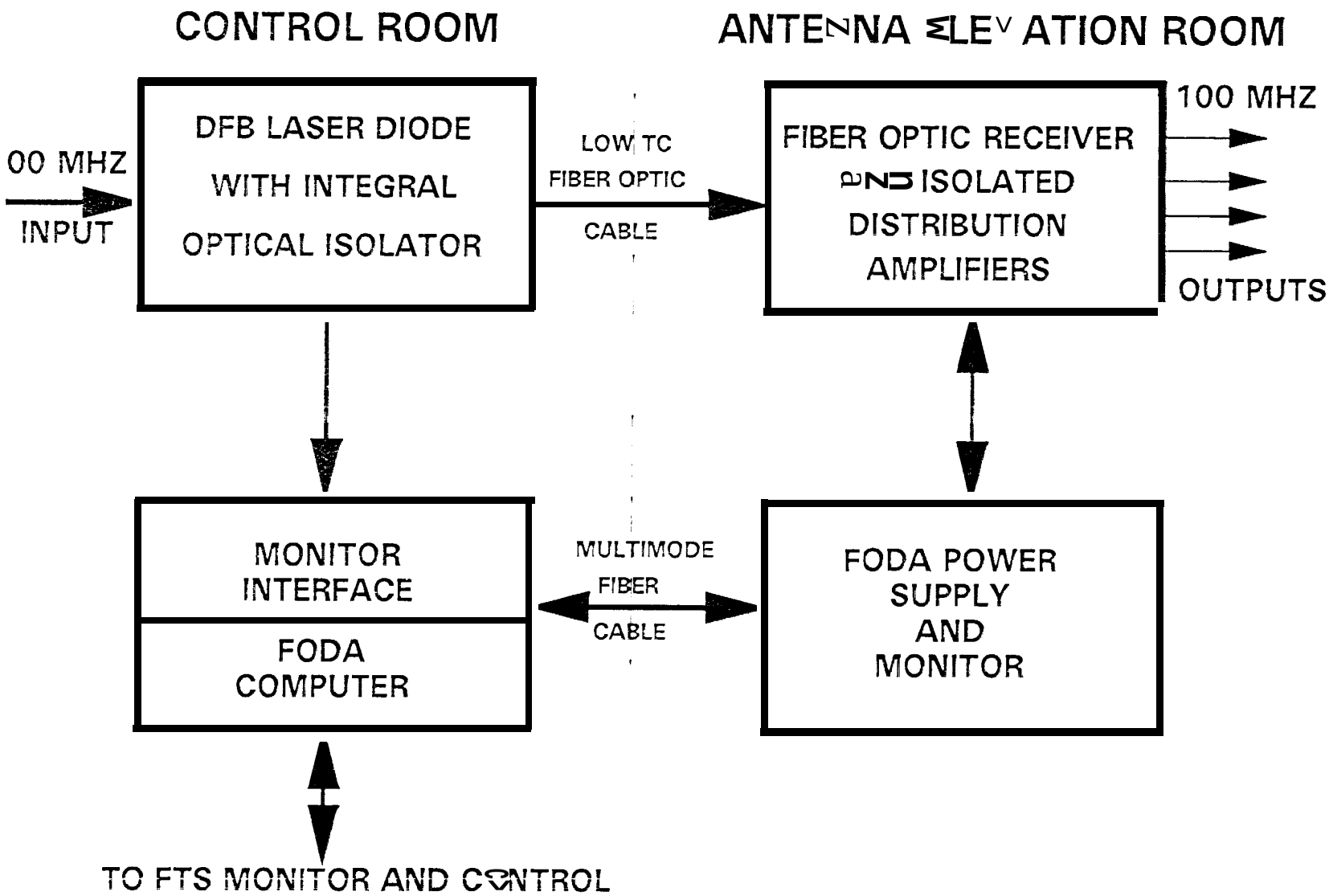

PERFORMANCE vs SPECIFICATIONS

L(f) dBc AT 100 MHz

OFFSET FREQUENCY, Hz	FTS SPEC.	LINK PERFORMANCE
1	-92	-119
10	-103	-128
100	-115	-134
1000	-115	-140
10,000	-115	-140

SPURIOUS OUTPUTS

NONE MEASUREABLE ABOVE NOISE LEVEL IN 1 Hz BANDWIDTH

ALLAN DEVIATION

TAU, SECONDS	FTS SPEC.	LINK PERFORMANCE
1	2E-13	2E-14
0	4E-14	4E-15
100	----	1E-15
1000	1.5E-15	5E-16
3000	1.5E-15	3E-16
10,000	----	2E-16

CABLE STABILITY

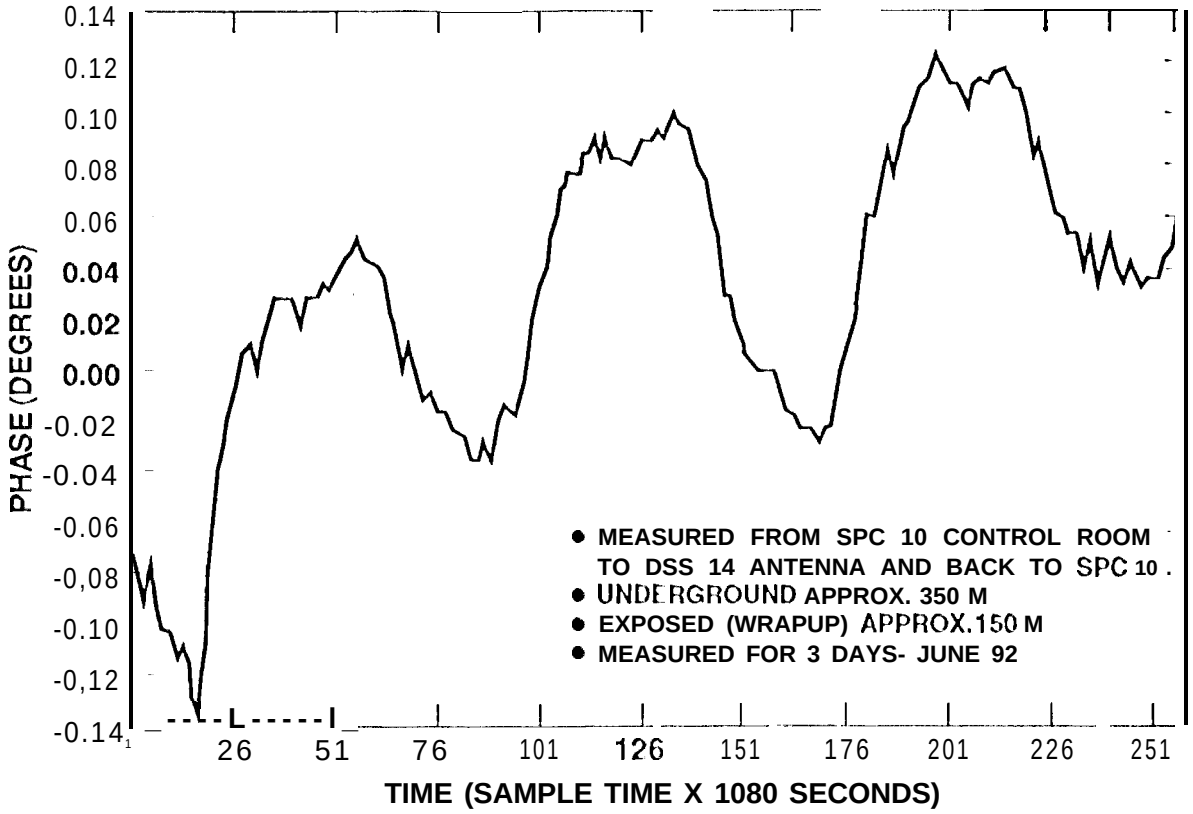

PHASE AT 100 MHz vs TIME: MEASURED AT DSS 14 OVER 1 KM OF LTC FIBER OPTIC CABLE

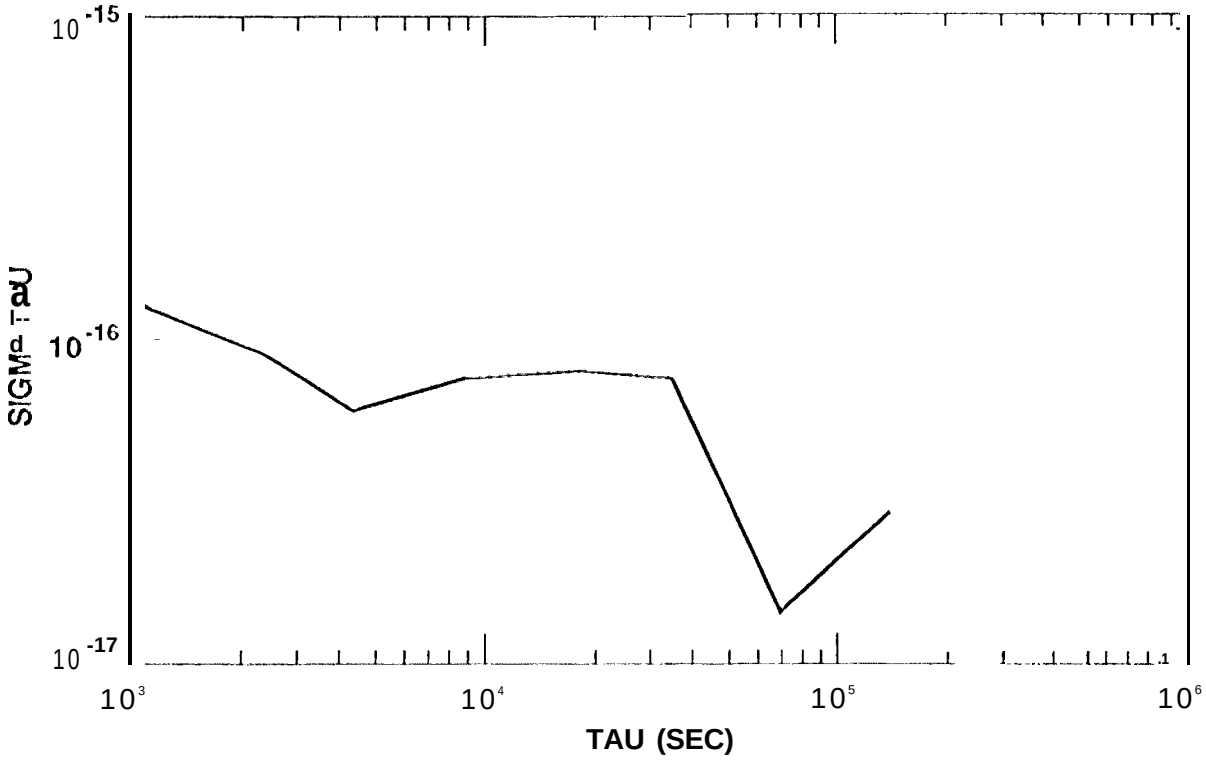

ALLAN DEVIATION COMPUTED FROM PHASE DATA TAKEN AT DSS 14 OVER 1 KM FIBER OPTIC LINK USING LIC FIBER

CONCLUSIONS

- TWO OF THE PLANNED SIX LINKS ARE INSTALLED
- LINK PHASE NOISE AND ALLAN DEVIATION DO NOT DEGRADE THE HYDROGEN MASER PERFORMANCE USING 800 METERS OF LTC FIBER OPTIC CABLE
- FUTURE SYSTEM REQUIREMENTS (e.g. CASSINI) MAY NECESSITATE ACTIVE PHASE STABILIZATION