POWER SYSTEM DESIGNS AND TECHNOLOGIES FOR SMALL PLANETARY SPACECRAFT

for

Space Power Workshop

JPL

C. P. BANKSTON
JET PROPULSION LABORATORY
April 20,1994

CURRENT TRENDS

- Spacecraft Miniaturization (while maintaining reliability)
- Rapid, Low Cost Implementation
- Low Cost Mission Operations
- Less Dependence on Nuclear Fuel
- Technology Commercialization

NAS Soace Science Spacecraft

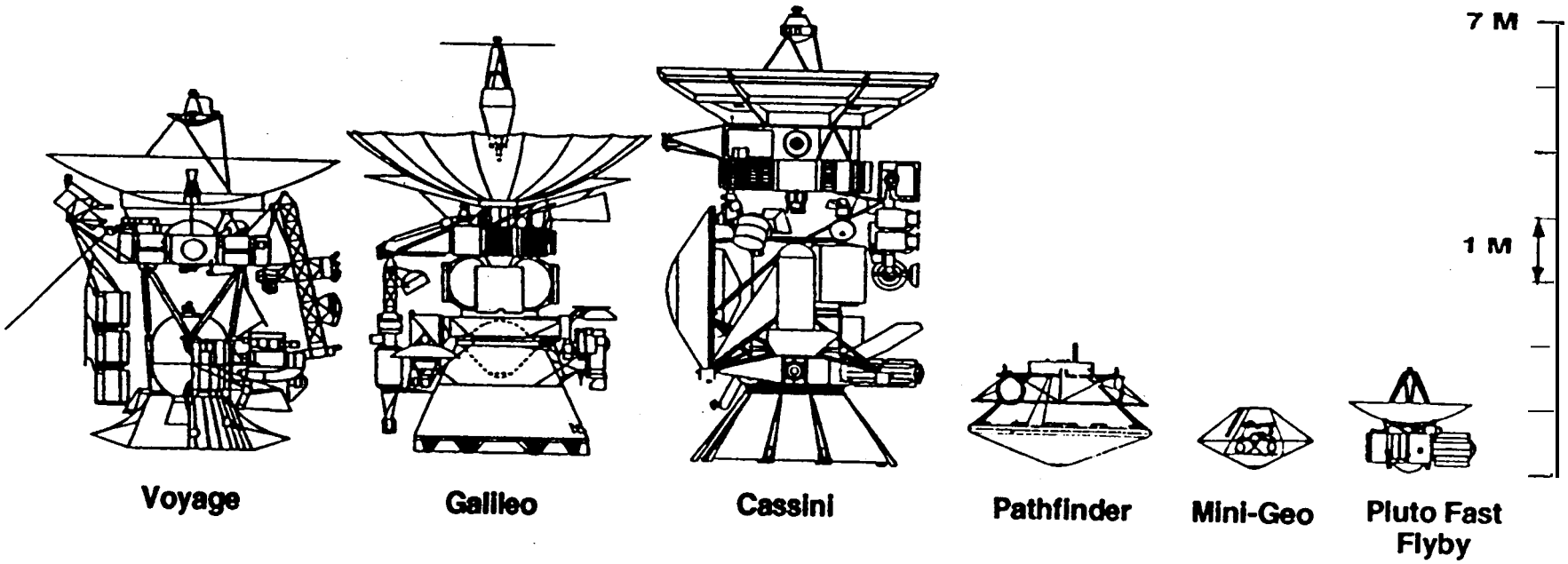

JPL

IMPLEMENTATION DEVELOPMENT OFFICE PRESENTATION
FLIGHT SYSTEM TESTBED

CONFIGURATION OPTIONS

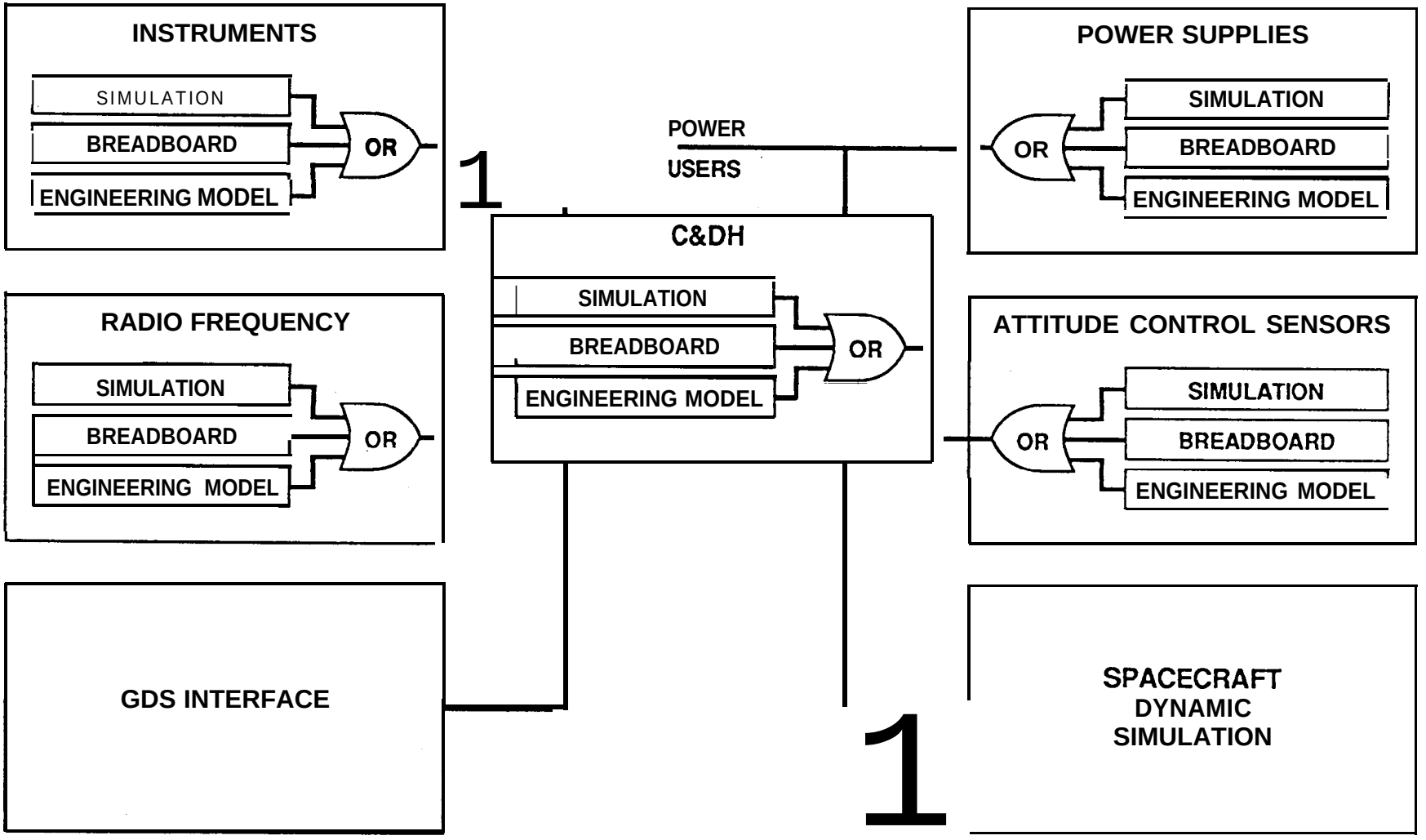

FLIGHT SYSTEM TESTBED

VIRTUAL TESTBED CONFIGURATION

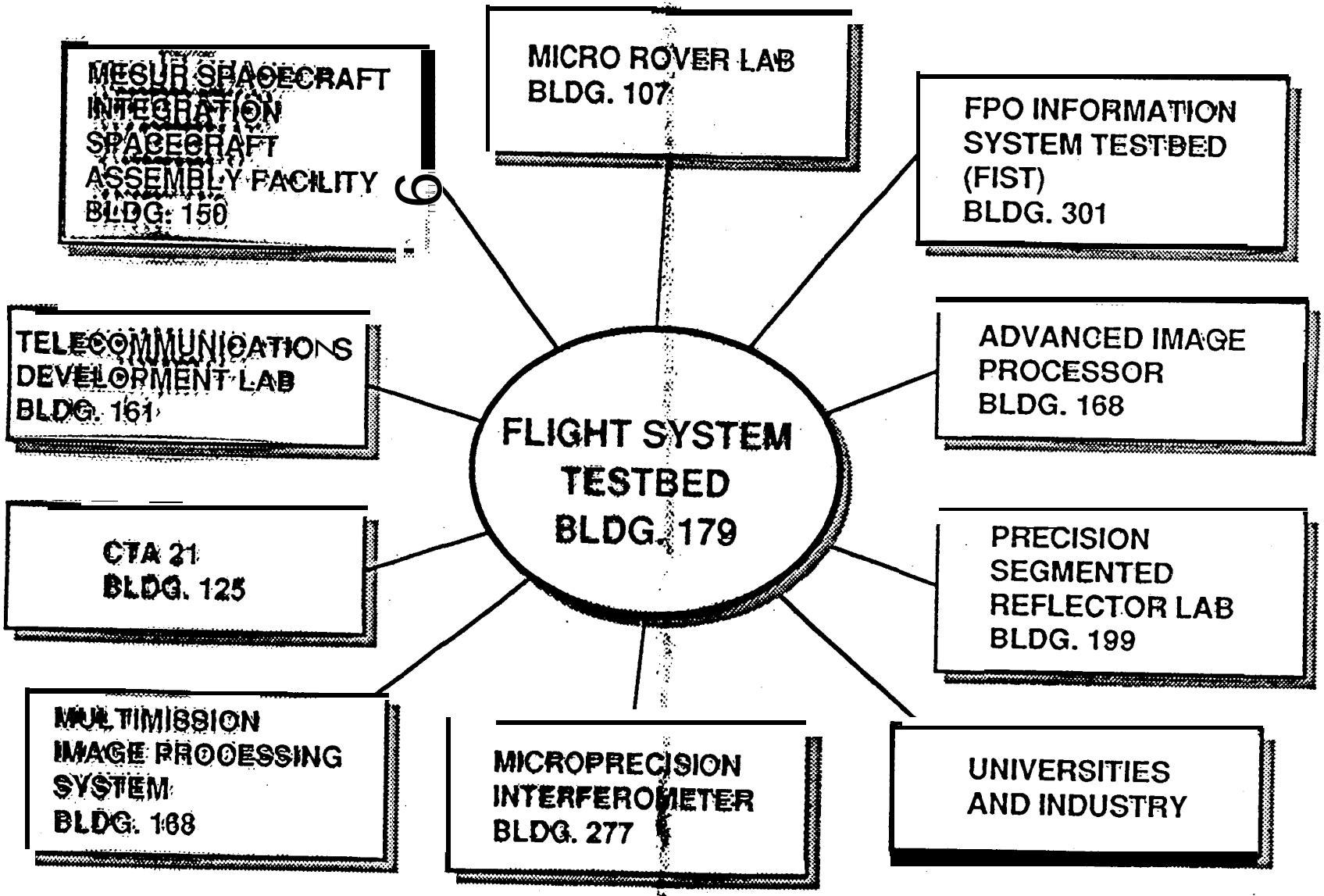

PROJECT DESIGN CENTER

SPACECRAFT DESIGN

System Context

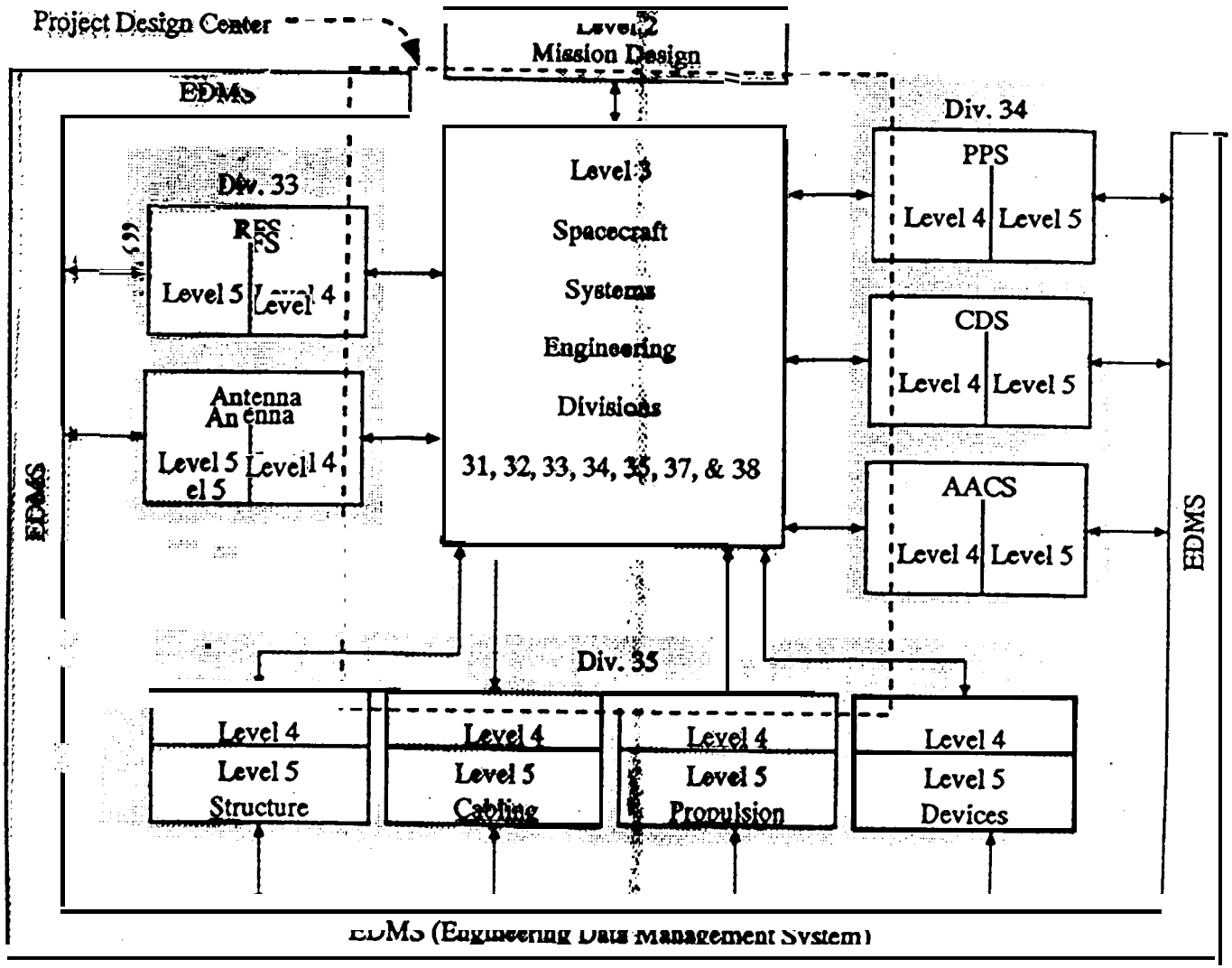

DESIGN REQUIREMENTS

	Cassini	Mars Pathfinder	Mars PF Rover	Pluto Fast Flyby
Redundancy	Yes +	Some	None	Yes
Qual Assur/Rel	A	C+	D+	B
Parts	S	B/S	B	B/S
Design Life	15 Yrs	1.5 Yrs	7-30 days	10 yrs
Dev. Time	7 Yrs	2 Yrs	2 Yrs	4 Yrs
No. Instruments	13	2	1	4

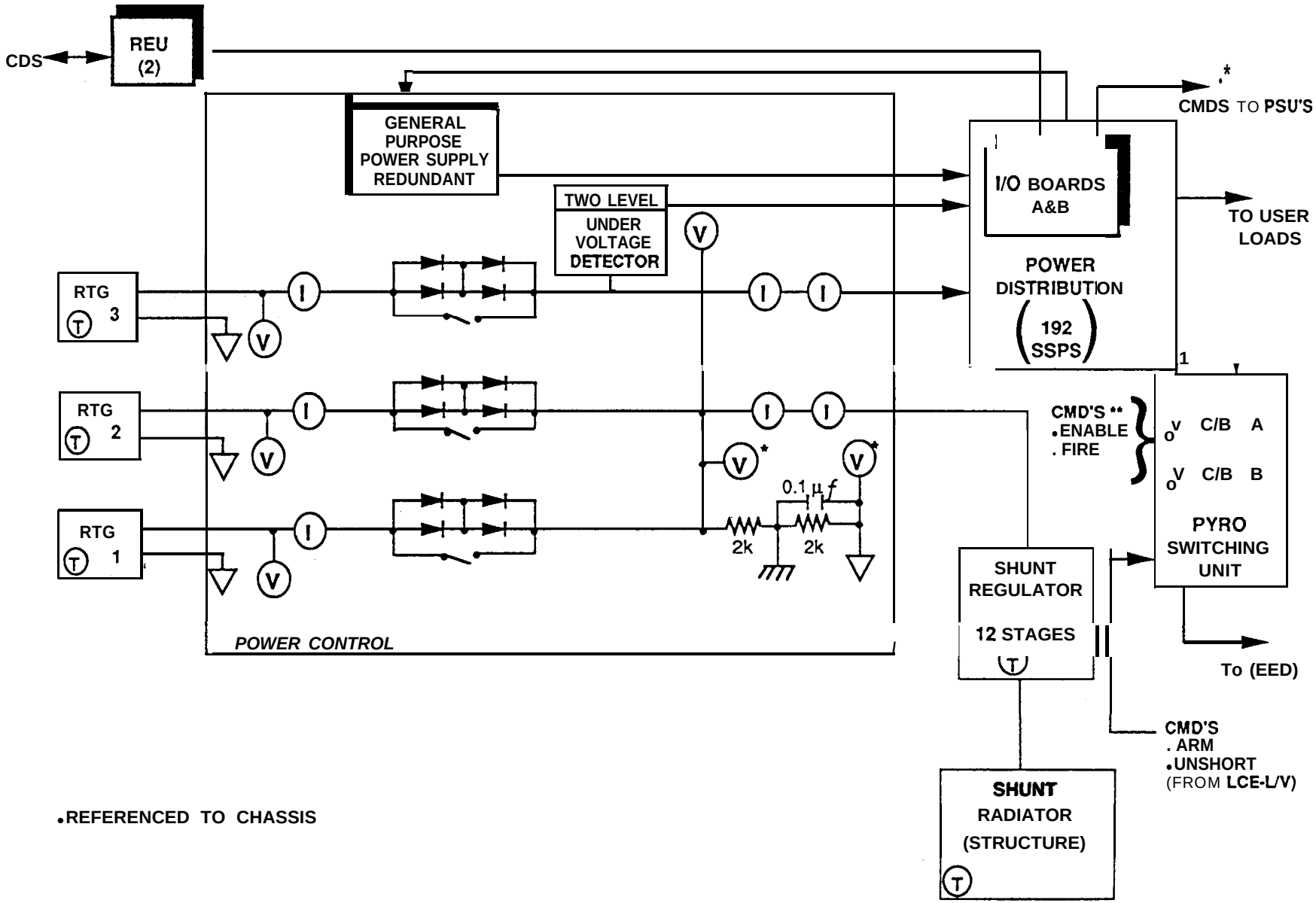

•REFERENCED TO CHASSIS

CASSINI
PPS BLOCK DIAGRAM

C 5/73/92

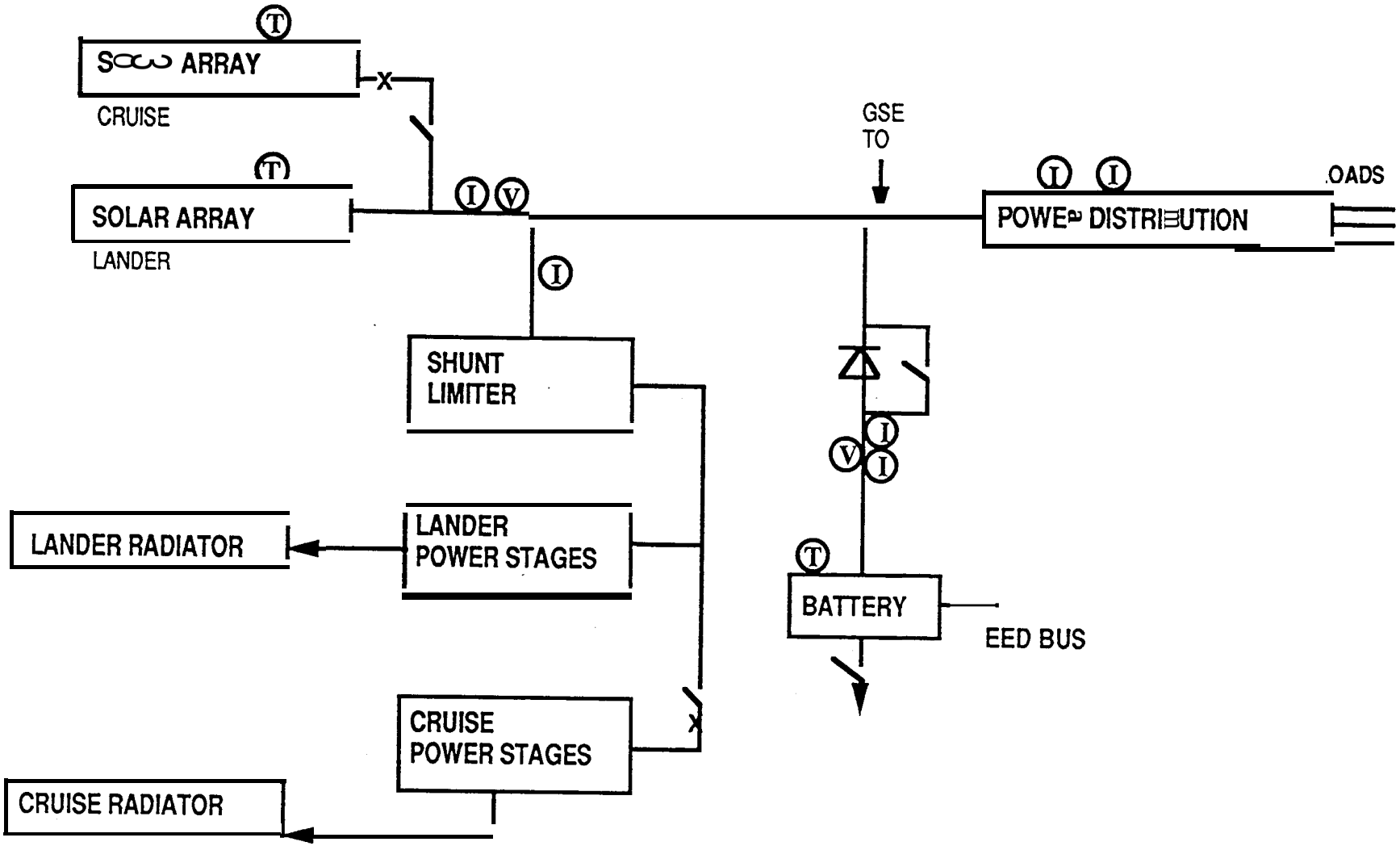

MARS PATHFINDER POWER SYSTEM BLOCK DIAGRAM

ROVER POWER SYSTEM FUNCTIONAL BLOCK DIAGRAM (FOR REV. Q3)

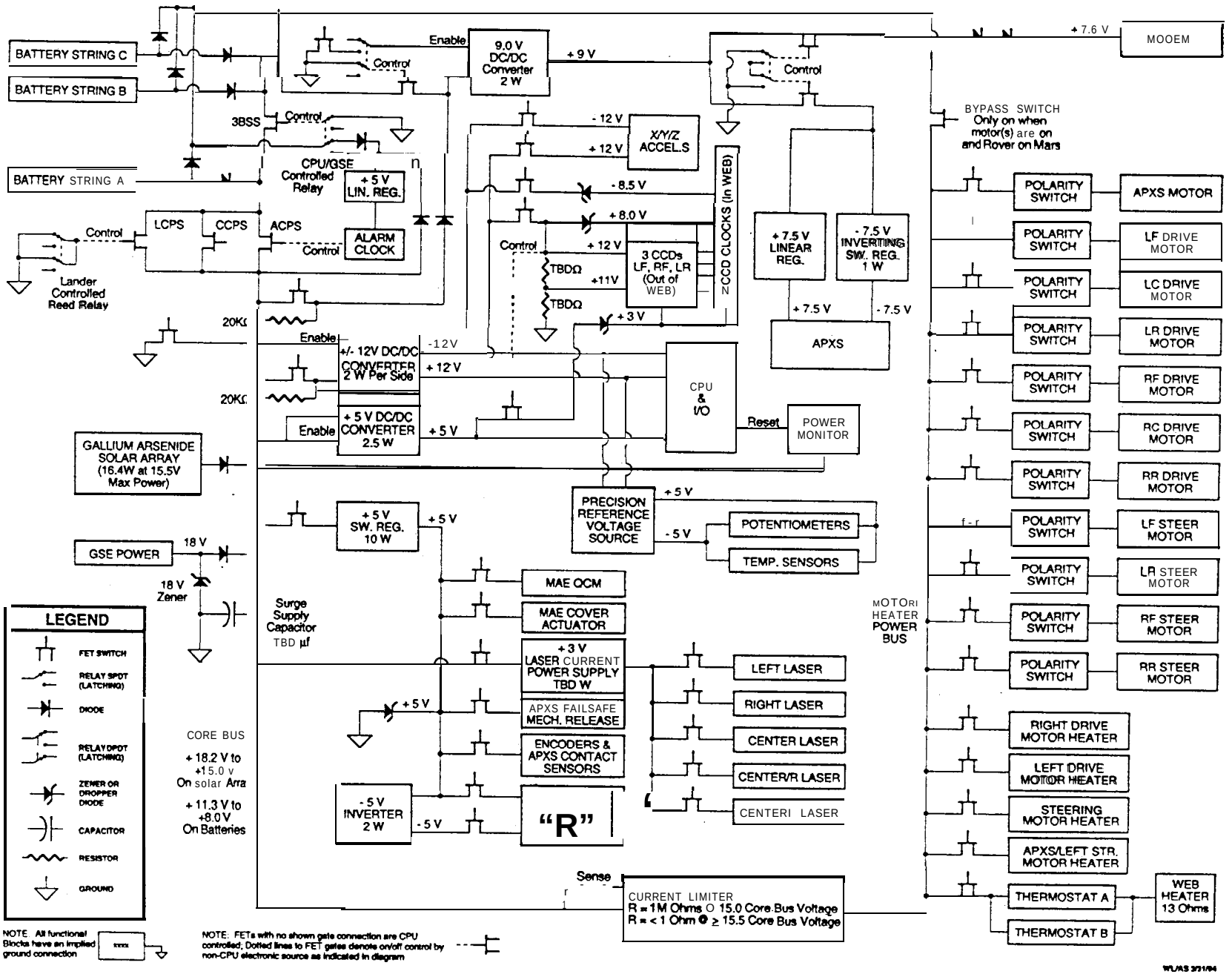

POWER PYRO SUBSYSTEM (PPS)

PLUTO PPS DESIGN

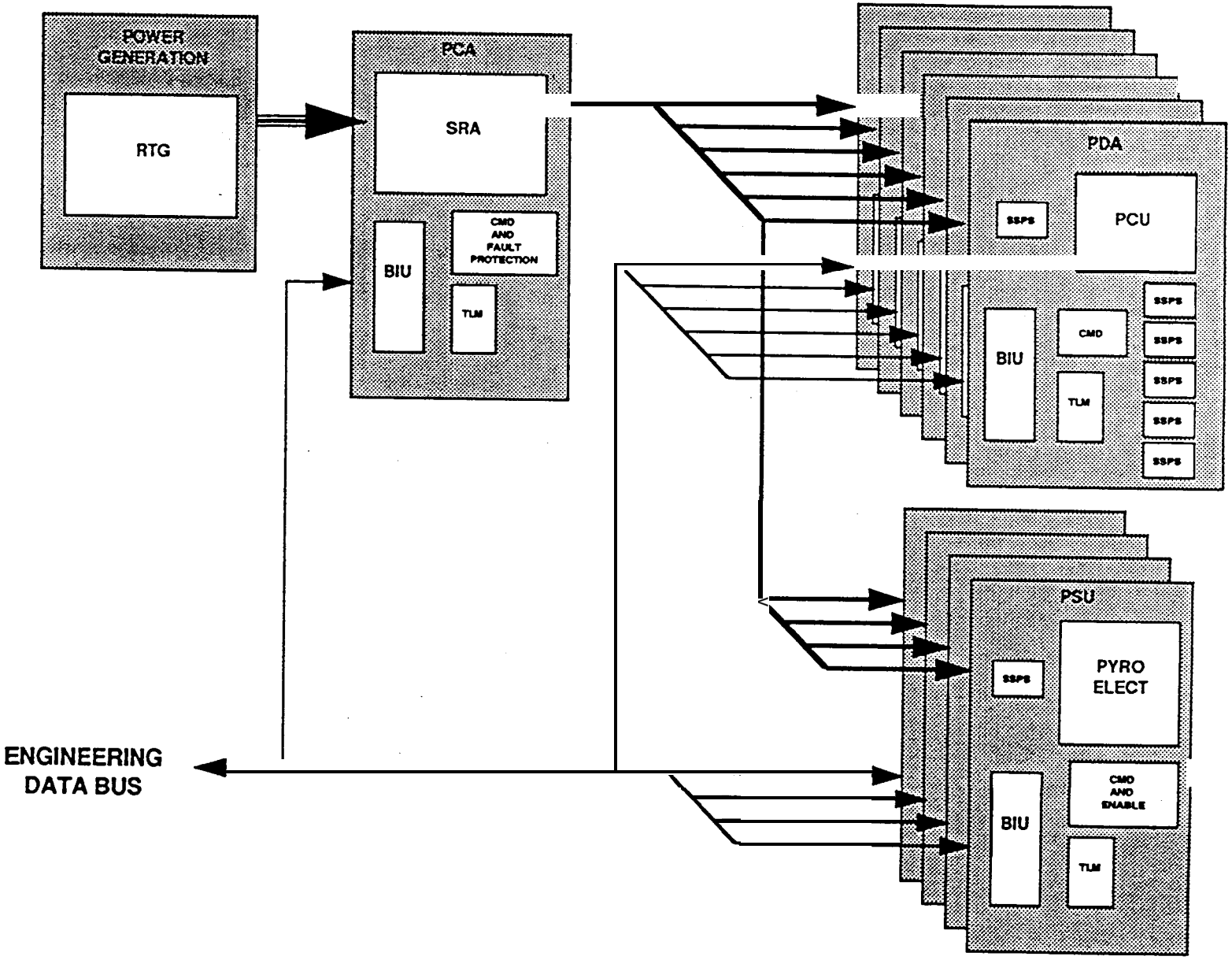

DESIGN CHARACTERISTICS

	Cassini	Mars Pathfinder	Mars PF Rover	Pluto Fast Flyby
SOURCE	RTG	Solar Array/ Sec. Batt.	Solar Array/ Prim. Batt.	Under Study
Fault Protection	Self. Contained in Power Sys.	Central Computer	Central Computer	Central Computer?
Bus Voltage	30 +/- 0.5 DC	33-27DC Batt. Ctrl.	33-27DC also 12, 13,5, -7	15+/-?DC also 12, 5,3..

DESIGNIDEVELOPMENT APPROACH

	Cassini	Mars Pathfinder	Mars PF Rover	Pluto Fast Flyby
Implementation Approach	Pwr. Sys. Dev. Self-contained	"Hybrid" + FST	Totally Integrated Avionics Team + FST	PDC + FST
Test vs. Analysis	Anal. ++ Test + (Box level)	Anal. + Test ++ (All levels)	AnaL Min. Test +++	AnaL +? Test +++?

TECHNOLOGY INSERTION

- Compact, high efficiency, high energy density components needed for spacecraft miniaturization
  - High efficency, hybrid or monolithic power conversion and control electronics
  - Compact, high energy density (rechargeable) battery technologies
  - High efficiency, thermal-to-electric converters
  - High efficiency, solar cells
- Less dependence on nuclear fuel
  - – Compact/high efficiency thermal-to-electric converters
  - – Solar cells and arrays capable of operating beyond 4 AU
  - - Long life batteries

Solid State Power Switch (SSPS) for Cassini Power Subsystem

SSPS Discrete Breadboard (BB)

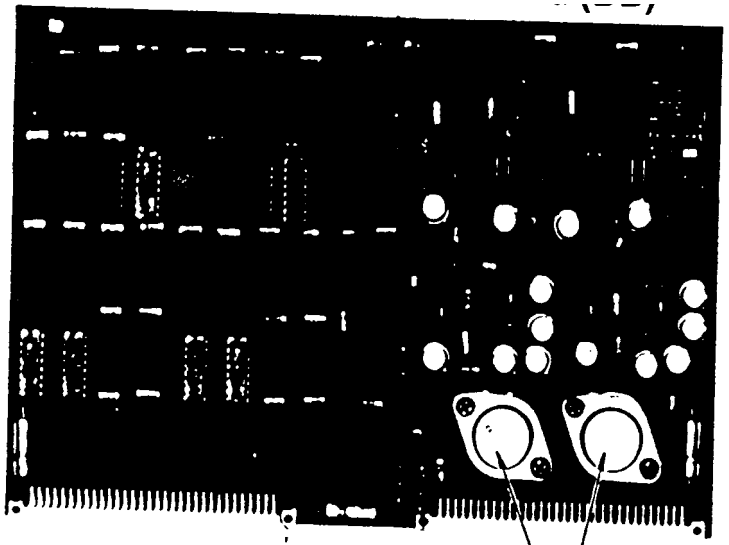

Digital Section

FETs

SSPS Hybrid

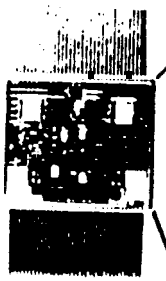

Digital Section (Gate Arrays)

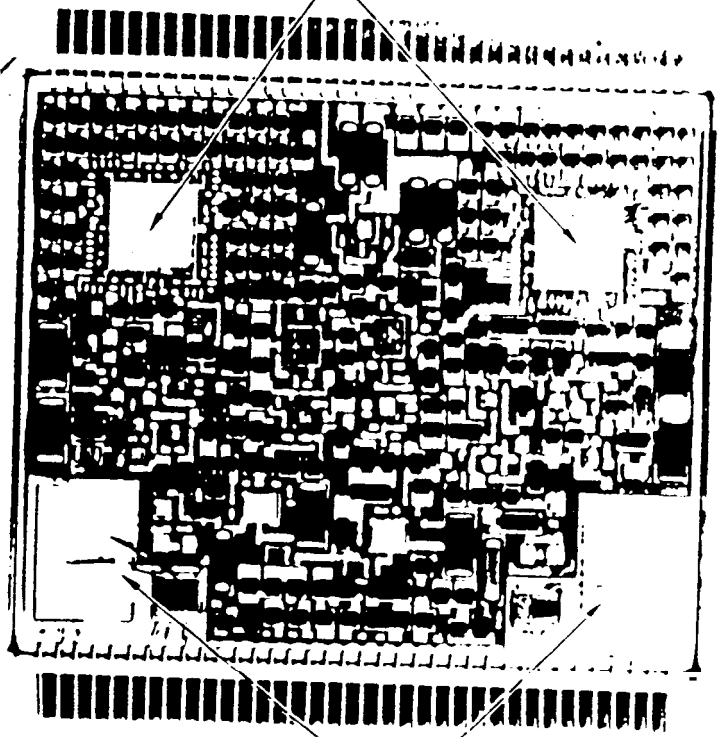

FETs

- **SSPS is** used to connect and disconnect the S/C loads to the S/C bus and to **provide distributed fault protection**
- **Features a redundant** design **for a fault tolerance**
- **Rated for the 30V** bus and 3A loads

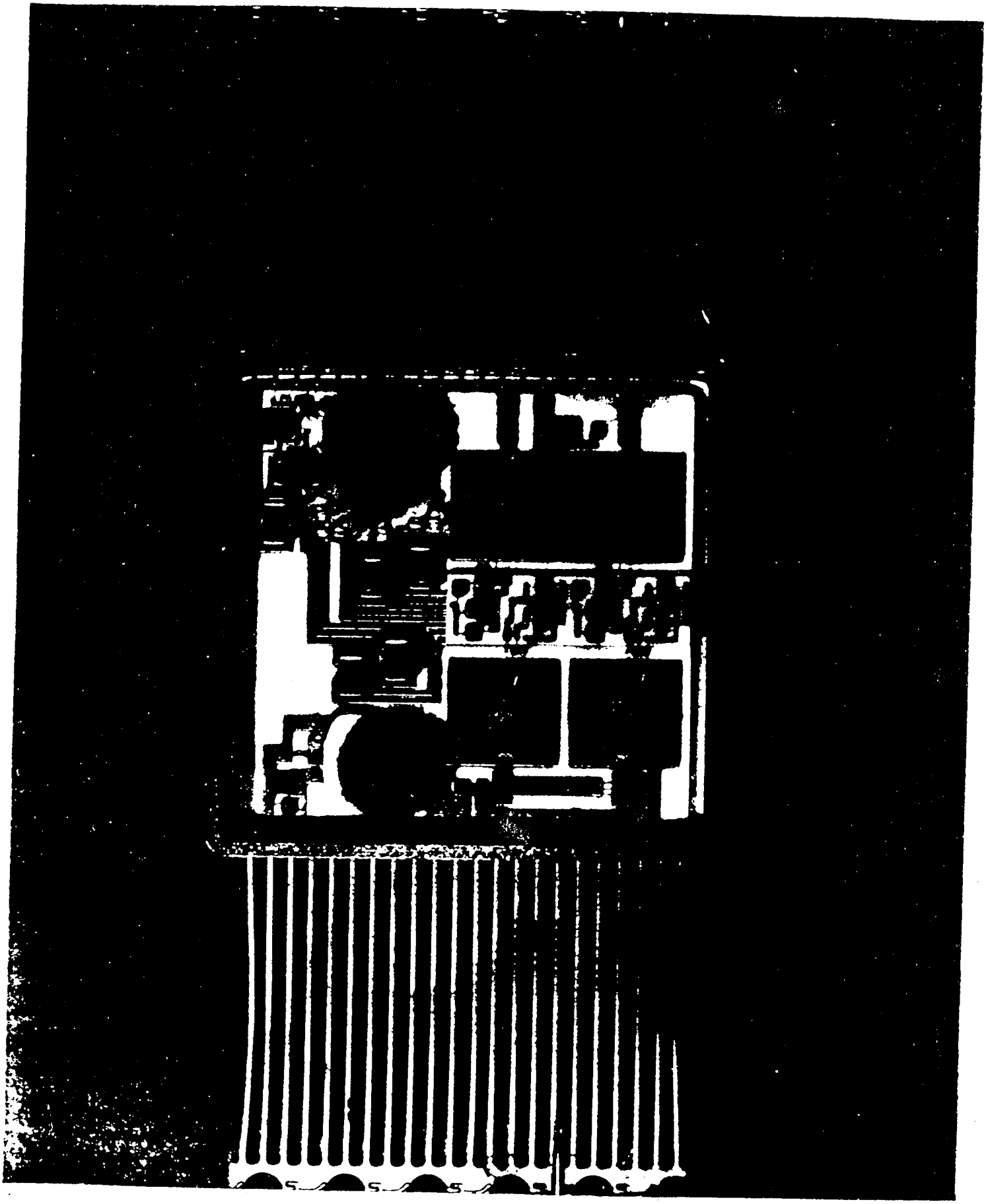

JPL

PROJECTED DIAMOND FILM PICs IMPACT TO PLUTO POWER SYSTEM

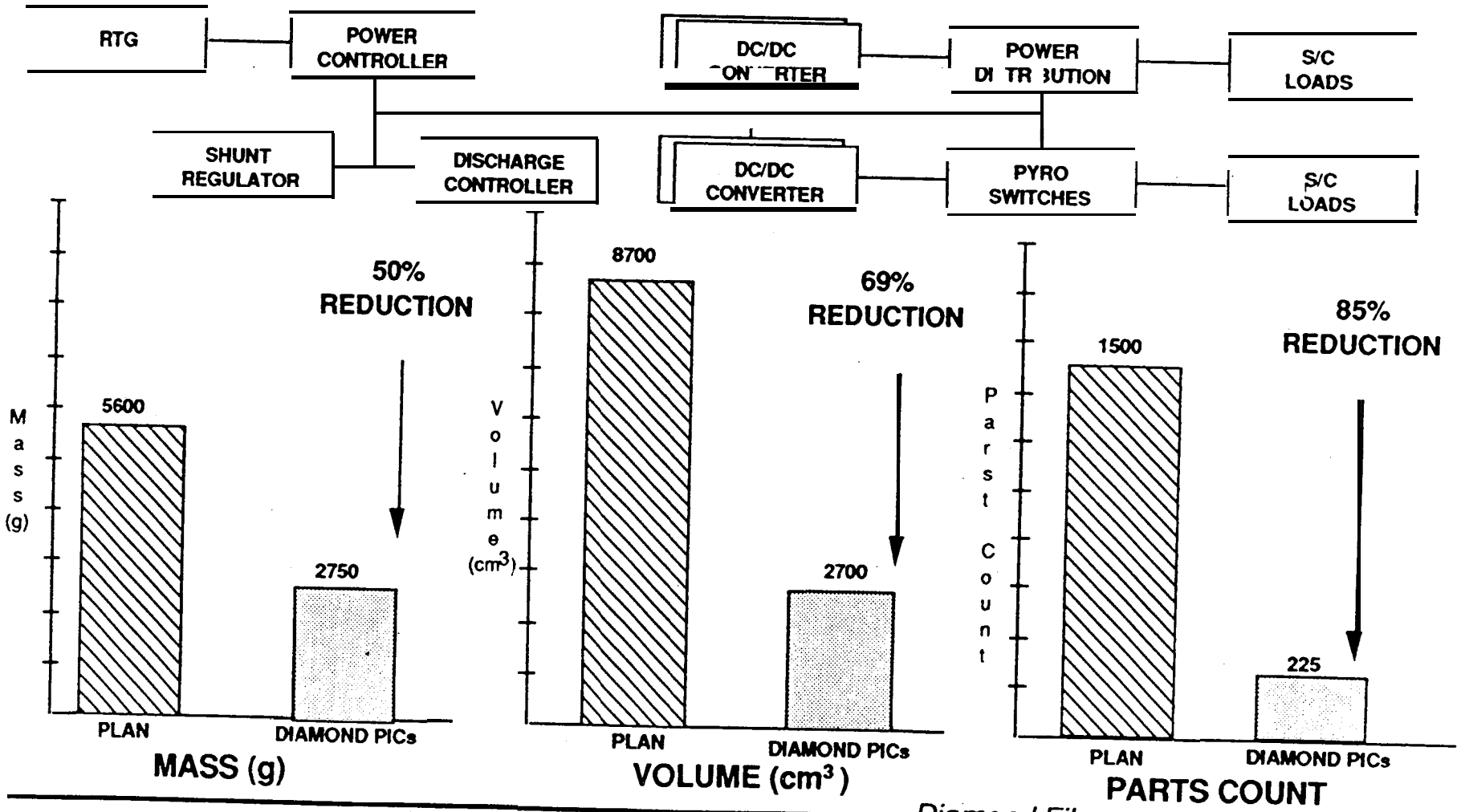

JPL PROGRESS IN RECHARGEABLE BATTERY TECHNOLOGY

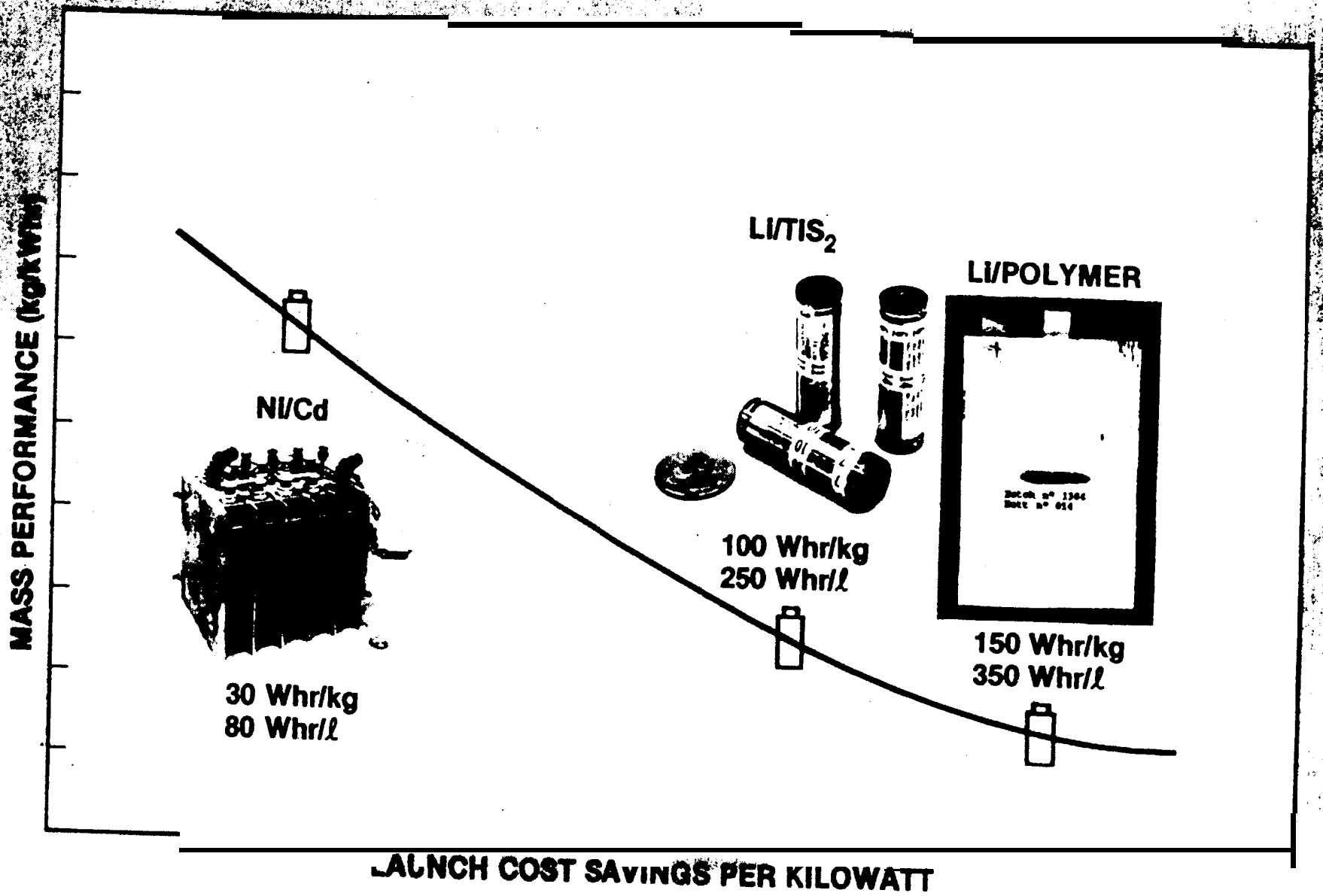

SMALL AMTEC CELL DESIGN CELL ARRAY, AND BASE TUBE WITH PHOTODEPOSITED CURRENT COLLECTOR

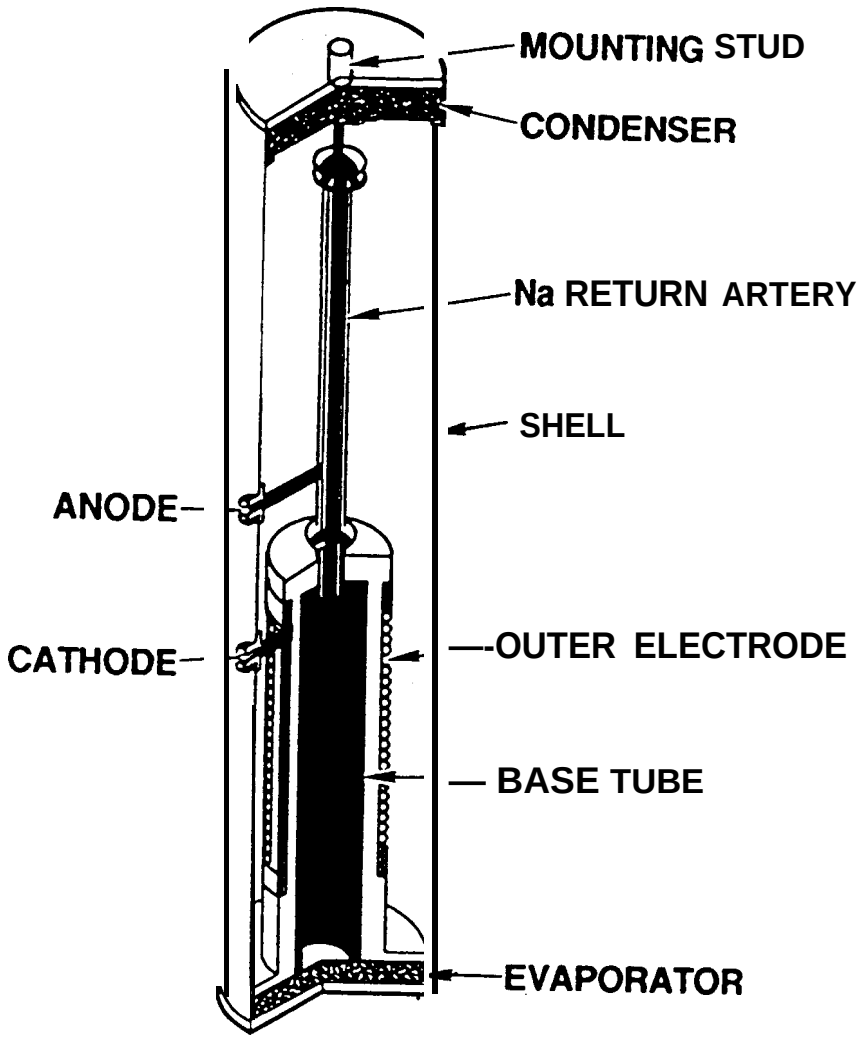

AMTEC CELL

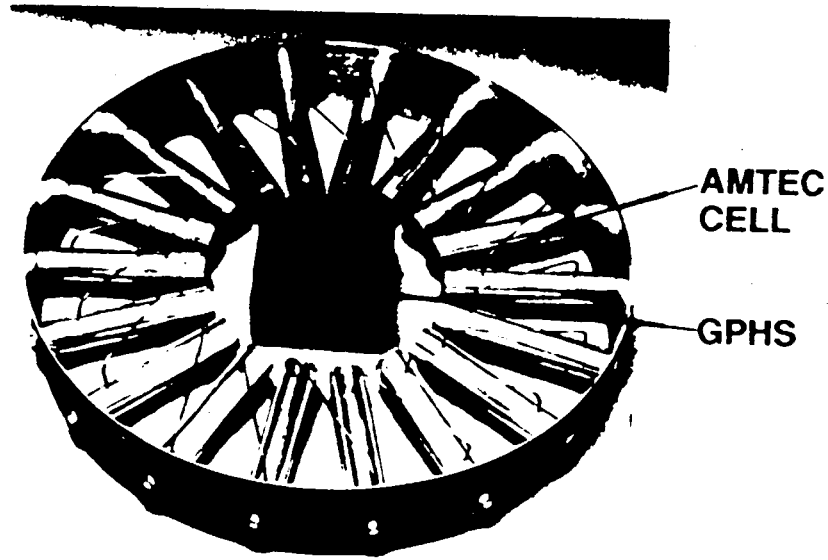

MINI AMTEC/GPHS ARRAY

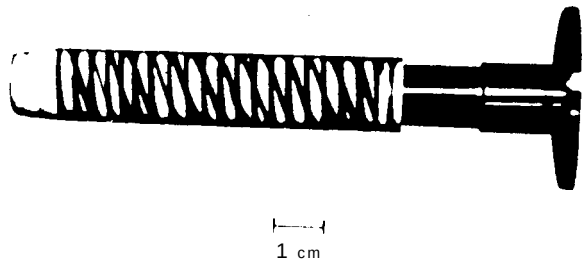

PHOTODEPOSITED MOLYBDENUM GRIDS ON BRAZEN β" ALUMINA TUBE

TPV Systems Design

- **Performance Parameters:**
  - Technology: Current Advanced
  - Radiator Diameter (m): 1.0-1.3 0.8-0.9
  - Mass (kg): 11.1 8.6
  - # GPHS: 3 2
  - BOM Power Output (W_e): 89 95
  - Efficiency: 12% 19%
- **Key technologies:**
  - GaSb photovoltaics
  - Bandpass filter
  - Reflective cavity

JPL TPV System Concept

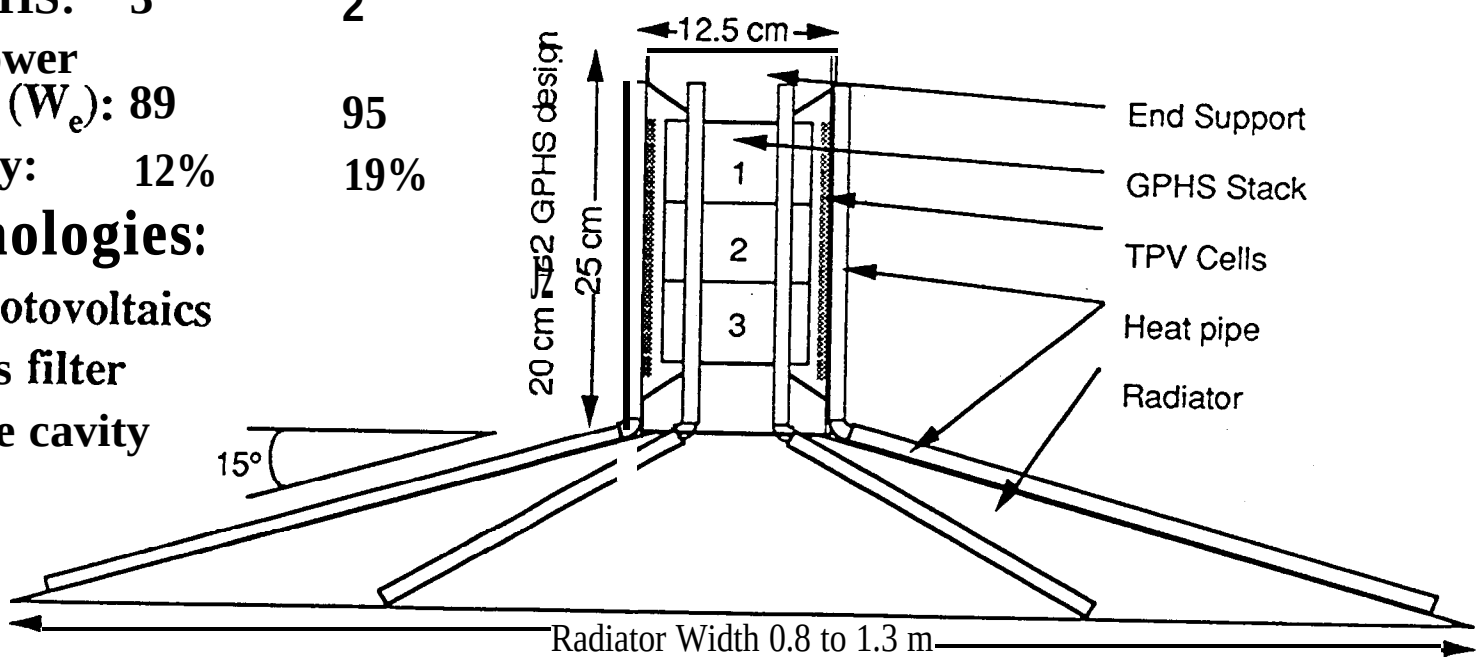

TECHNOLOGY INSERTION

- Rapid, Low Cost Implementation
  - Flight System Testbed
    - » Verify new technologies in system environment
  - Team with industry; use commercial products when possible
- Low Cost Mission Operations
  - High Performance Solar Arrays and Batteries
    - » Greater *POWER* Margins allow Instruments to be turned on and left on
    - » Reduces costly sequence generation, telemetry and monitoring functions