file: UPDATE ARTICLE

An Update on NASA K_a-Band Propagation Measurements

Faramaz Davarian
Jet Propulsion Laboratory
California Institute of Technology
Pasadena, California 91109

1. Introduction

Reference [1] provides an introduction to K_a-band propagation studies supported by the NASA Propagation Program at the Jet Propulsion Laboratory (JPL). Updates of these activities are presented in this article. Recent and current K_a-band propagation efforts are centered around two space platforms of opportunity, namely, European Space Agency's (ESA's) Olympus and NASA's ACTS[1] satellites. The U.S. Olympus measurements were carried out by the Virginia Polytechnic Institute and State University (Virginia Tech) at Blacksburg, VA, from 1991 to 1993. The measurement phase of that experiment ended in early 1993, and the data analysis phase was completed in December 1993. The ACTS propagation campaign began its data collection phase in December 1993 at several north American sites and will continue for two years and may be extended to three or four years.

The goal of K_a-band propagation studies at JPL is to enable the satellite communications industry to combat channel propagation anomalies, and, hence, develop a reliable service at this band [2]. To define the objectives of the experimental campaigns, JPL relied on the views of the users in industry, academia, and government agencies. Interested parties were invited to the ACTS Propagation Studies Workshop (APSW) to outline the objectives of NASA/JPL K_a-band activities [3]. Table 1 illustrates these objectives.

To make the best use of the available funds, the participants of APSW focused on the urgent needs of the communications community. It was believed that due to the under utilization of the K_a-band at the present time, dual-polarized systems will not be used in the near future. Consequently, to save cost, a depolarization effects study was not recommended for current experiments.

---

[1]ACTS is an acronym for NASA's Advanced Communications Technology Satellite.

Table 1. K_a-Band Propagation Campaign Objectives and Approach

OBJECTIVE	APPROACH
1 Provide a base of 20/30-GHz slant-path propagation data	Make long-term beacon measurements at multiple sites
2 Improve the existing rain-climate maps	Make long-term meteorological measurements at geographically diverse sites
3 Improve the existing rain-attenuation models	Use a team of propagation experts to collect and analyze data
4 Develop frequency-scaling models	Make dual frequency measurements
5 a) Study large-baseline diversity effects. b) Study diversity effects.	a) Collect data at sites separated by 1000 kilometers or more. b) Use sites separated by tens of kilometers.
6 Develop fade compensation algorithms	Collect first and second order statistics
7 Study scintillation effects	Collect data at adequate sampling rates
8 Characterize the mobile channel	Make mobile measurements
9 Archive and disseminate data	Use ACTS Propagation Data Center

2. New Results from the Olympus Experiments

The Olympus propagation payload consisted of three beacons at 12, 20, and 30 GHz. The measurement site at Blacksburg was equipped with three beacon receivers and radiometers at Olympus frequencies. In addition to the three main terminals, there was also a diversity terminal at 20 and 30 GHz. Blacksburg is in ITU-R rain-climate region K, and its elevation angle to Olympus was 14°.

Since a comprehensive account of the results of the Olympus propagation measurements at Blacksburg is beyond the scope of this article, only a few of the findings of the Olympus effort are reported here. Interested readers are referred to [4] and [5] for more information. Due to a three-month loss of signal from Olympus in 1991, measurements taken in 1991 had to be augmented with those in 1992 to produce 12 months of data. Therefore, the analysis year of the Olympus campaign included periods January to May 1991, June to August 1992, and September to December 1991.

Figure 1 shows the one-year statistics of attenuation with respect to clear air (ACA) for 20 and 30 GHz frequencies. This figure is obtained from Reference [1].

Attenuation ratio (RA) is the instantaneous attenuation ratio between a higher frequency and a lower one. For the Olympus 20/30 GHz experiment, it is given as

$$RA(t) = \frac{ACA_{30}(t)}{ACA_{20}(t)}$$

where t denotes the time dependence of the effects, and subscripts 20 and 30 refer to Olympus 20- and 30-GHz signal frequencies, respectively. This ratio is sensitive to rain-drop-size distribution, and not only it does vary from storm to storm, it also changes throughout a single storm [6]. For example, the Blacksburg measurements have shown RA variations from about 1.5 to 5.5 in a single storm. One-year Blacksburg measurements have resulted in a median value of 1.93 for RA. This figure was derived from rain-induced fade data by using measurements with $ACA_{20}(t) > 1$ dB.

Note that the median value of RA is a function of ACA_{20}. The median values of RA were also calculated for 1-dB binned 20-GHz attenuation values (i.e., 1 to 2 dB, 2 to 3 dB, 3 to 4 dB, etc.) by Virginia Tech researchers [4]. Then a linear regression was performed on these median values to arrive at an average value of 2.1 for RA. The ITU-R model value for 30/20 GHz attenuation ratio is 1.96, which is between the above values of 1.93 and 2.1.

The statistical attenuation ratio (RAS) is defined as the quotient of two statistical values of ACA at 30 and 20 GHz. It is interesting to note that this ratio, which can be obtained from Figure 1, closely approximates the median value of RA for different levels of ACA_{20} (see Figure 2).

The topic of fade duration statistics has been treated in [5]. A model has been developed that can be used for ITU-R climate region K at 14° elevation angle. This model is given as

$$FT_f = 89004(-8.899 + 0.915f - 0.008f^2)e^{(-1.315A + 0.118A^2 - 0.004A^3)} \qquad (1)$$

where FT_f is the cumulative fade time in seconds for fade duration intervals between 30 and 60 s, f is frequency in GHz (12 GHz $\leq f \geq$ 30 GHz), and A is the attenuation in dB. This model can be extended to other fade durations using the scaling ratios given in Table 2. It should be used with caution, however, because it is based on one-year data from a single site. It is hoped that Equation 1 will be further developed as more data become available from the ACTS campaign.

Table 2. Scaling ratios for different fade duration intervals relative to the 30 to 60 s fade duration interval, which is normalized to a value of 1 at each frequency.

Fade Duration Interval (s)	12 GHz	20 GHz	30 GHz
30-60	1	1	1
60-120	2.18	2.8	2.29
120-300	4.93	5.86	6.72
300-1200	9.9	12.77	15.69

3. ACTS Propagation Campaign

The Olympus campaign has been very successful in substantially enhancing the European K_a-band propagation data base [7]. Due to the location of the spacecraft over the Atlantic Ocean (19° west), Olympus can be viewed only from the eastern region of North America and at low elevation angles. For this reason, only two sites in North America used Olympus for propagation data collection, the U.S. site in Blacksburg and a Canadian site in Ottawa.

The North American K_a-band propagation data base will, however, experience a large expansion due to the ACTS propagation campaign. The satellite payload includes K_a-band transponders and two propagation beacons. The ACTS beacons will provide the signal source for fixed propagation experiments at 20 and 27 GHz, and its high-EIRP 20-GHz downlink will be used in mobile propagation experiments.

The ACTS satellite was successfully launched in September 1993. After the required in-orbit tests, it was declared ready for use on December 1, 1993. This date marks the start of ACTS propagation measurements.

3.1 ACTS Measurement Sites

The ACTS Propagation Campaign employs a variety of terminals for collecting propagation data. This set includes the ACTS Propagation Terminal (APT) delivered by NASA to the experimenters, a mobile propagation terminal, and a few others.

The APT uses a small dual-frequency antenna and a front end shared by the beacon and the total-power radiometer receivers. The RF front-end enclosure is carefully temperature controlled to ensure radiometer stability. A simplified block diagram of the APT is shown in Figure 3. The salient features of the terminal are as follows:

- 1.2-m common antenna for both 20- and 27-GHz beacons
- Digital beacon receiver with 15-Hz detection bandwidth
- Total-power radiometers with sensitivity of 1 K
- PC-based data collection system

Figure 4 is a photo of the APT. There are seven APTs installed at ACTS measurement sites, as shown in Table 3. Although other fixed terminals will also be used to extend the range and amount of the collected data, the seven APTs constitute the backbone of the ACTS propagation campaign.

Table 3. ACTS Propagation Terminal Sites

LOCATION	ITU-R Rain Zone	Path Elevation in Degrees
Vancouver, BC	D	30
Ft. Collins, CO	E	43
Fairbanks, AL	C	9
Clarksburg, MD	K	39
Las Cruces, NM	M/E	51
Norman, OK	M	49
Tampa, FL	N	52

The sites in Table 3 were carefully selected to represent different rain-climate zones in North America. Figure 5 shows the position of these sites. Weather margin is in excess of 25 dB for these sites. One exception is the site in Alaska that is located at the edge of the beacon coverage area with only 15-dB weather margin.

3.2 Mobile Propagation Terminal

The mobile receiver system is depicted in Figure 6, showing a microwave spectrum analyzer and frequency synthesizer at the heart of the RF subsystem. Other main functional components are the antenna tracker system, a low noise frequency downconverter, an IF stage with automatic frequency control (AFC), and a PC-based data acquisition system. Ancillary sensors give vehicle speed and direction.

The receiver uses an open-loop tracking system for maintaining satellite direction during field measurements. Two sites, Maryland and Alaska, have been selected for making the measurements. Depending on the availability of funds, more sites may be included in this endeavor in the future. The salient features of the receiver are given in Table 4.

Table 4. Salient Features of the ACTS Mobile Propagation Terminal

FEATURE	VALUE
Signal frequency and polarization	19.9 GHz; Vertical
Antenna diameter, gain, and beamwidth	15 cm; 28 dBi; 6.8 deg
System noise temperature (nominal)	430 K
Beacon EIRP Maryland Alaska (Fairbanks)	 65 dBW 56 dBW
Carrier-to-noise ratio (in 400 Hz) Maryland Alaska (Fairbanks)	50 ~~58~~ dBW ~~47~~ dBW 40

3.3 Other Terminals

Propagation data may also be acquired from a host of ground stations employed in the ACTS communication experiments. Examples include the NASA ground station in Cleveland, Ohio; the network of ACTS Very Small Aperture Terminals (VSATs); and the ACTS Mobile Terminal at JPL. The mobile terminal at JPL is a two-way communications terminal and should not be confused with the mobile propagation terminal mentioned earlier. Comsat Laboratories is planning a diversity test where the APT and a terminal provided by Comsat will be used together for the experiment. A similar experiment will also be conducted by Florida Atlantic University.

The NASA ground station in Cleveland will produce data similar to the APTs with the exception of radiometric and weather data because this station is not equipped with radiometers and rain gages. The VSATs will provide only downlink fade and outage information. It is hoped that data from as many stations as possible will be used to augment data from ACTS propagation experiments to increase the resolution of the resulting climate maps and rain-fade models.

3.4 ACTS Propagation Data Center

The ACTS Propagation Data Center is a key element of the ACTS propagation campaign. The Data Center will receive raw and preprocessed data from ACTS propagation experimenters every month. The received data will be checked for validity before being added to the data bank . Faulty data will be flagged and immediately reported to the corresponding experimenter to prevent the collection of bad data.

In addition to the propagation experiments, the Data Center is planned to receive data from JPL's AMT measurements, as well as other experiments. In

collaboration with the experimenters, the Data Center will publish a compendium of campaign results at the end of the experiment period. The preprocessed data will be available from the Data Center on CD-ROM disks at the end of the campaign for the users of propagation data in industry, academia, and elsewhere.

4. Summary

Olympus and ACTS propagation campaigns constitute the core of NASA's K_a-band propagation efforts. Data and models resulting from these campaigns will enable technical development and business growth in new satellite-communications applications. In addition to the satellite communications industry, other important beneficiaries are regulatory agencies, e.g., ITU and FCC, and researchers in academia.

5. Acknowledgment

The research conducted for this paper was funded by the Jet Propulsion Laboratory, California Institute of Technology, under a contract with the National Aeronautics and Space Administration.

6. References

1. D. Chakraborty, F. Davarian, and W. Stutzman, "The K_a-band Propagation Measurement Campaign at JPL," *IEEE Antennas & Propagation Magazine,* Vol. 35, No. 1, Feb. 1993, pp. 7-13.

2. F. Davarian, "New Challenges in Earth Satellite Propagation Research", *IEEE Communications Magazine*, Apr. 1994.

3. F. Davarian, editor, *Presentations of the First ACTS Propagation Studies Workshop (APSW I),* Santa Monica, CA, JPL D-6918, Dec. 15, 1989.

4. J. Laster and W. Stutzman, *Attenuation Scaling by Frequency in the K_u/K_a-Bands Using the Olympus Satellite*, Satcom Report No. 93-16, Virginia Tech, Sep. 1993.

5. H. Ajaz and A. Safaai-Jazi, *Fade and Inter-Fade Durations in K_u- and K_a-Band Frequencies Measured from the Olympus Satellite Beacons*, Satcom Report No. 93-17, Virginia Tech, Oct.1993.

6. G. Ortgies, et al, "Effect -Specific Analysis of Propagation Parameters," *Proc. the 16th NASA Propagation Experimenters Meeting (NAPEX xvi) and ACTS Propagation Studies Miniworkshop*, Houston, TX, Aug. 1992, pp. 143-154.

7. *Proceedings of Olympus Utilization Conference*, Seville, Spain, Apr. 20-22, 1993, pp. 509-679.

BIOGRAPHY

Faramaz Davarian received his Ph.D. degree in electrical engineering from the University of Southern California in 1975. In the same year he joined the College of Science and Technology, Narmak, Iran, where he taught until 1979. He was with Lincom Corporation, Los Angeles, from 1979 to 1982.

Dr. Davarian joined JPL in 1982 to work on the Mobile Satellite Experiment (MSAT-X). During his participation in that project, 1982-86, he made many contributions to the development of mobile satellite technologies. His main areas of contribution were propagation, channel simulation, modulation, and systems engineering. During that period, his efforts gained him three technology patents.

Currently, Dr. Davarian supervises the Spectrum Engineering Group and manages the NASA Propagation Program at JPL. As the Propagation Program manager, he has initiated a number of studies and experiments to improve our knowledge of radio wave propagation in satellite communications. Since 1986 he has been a part-time faculty member of the engineering department of Loyola Marymount University (LMU), Los Angeles, where he teaches graduate courses in communications.

Fig 1

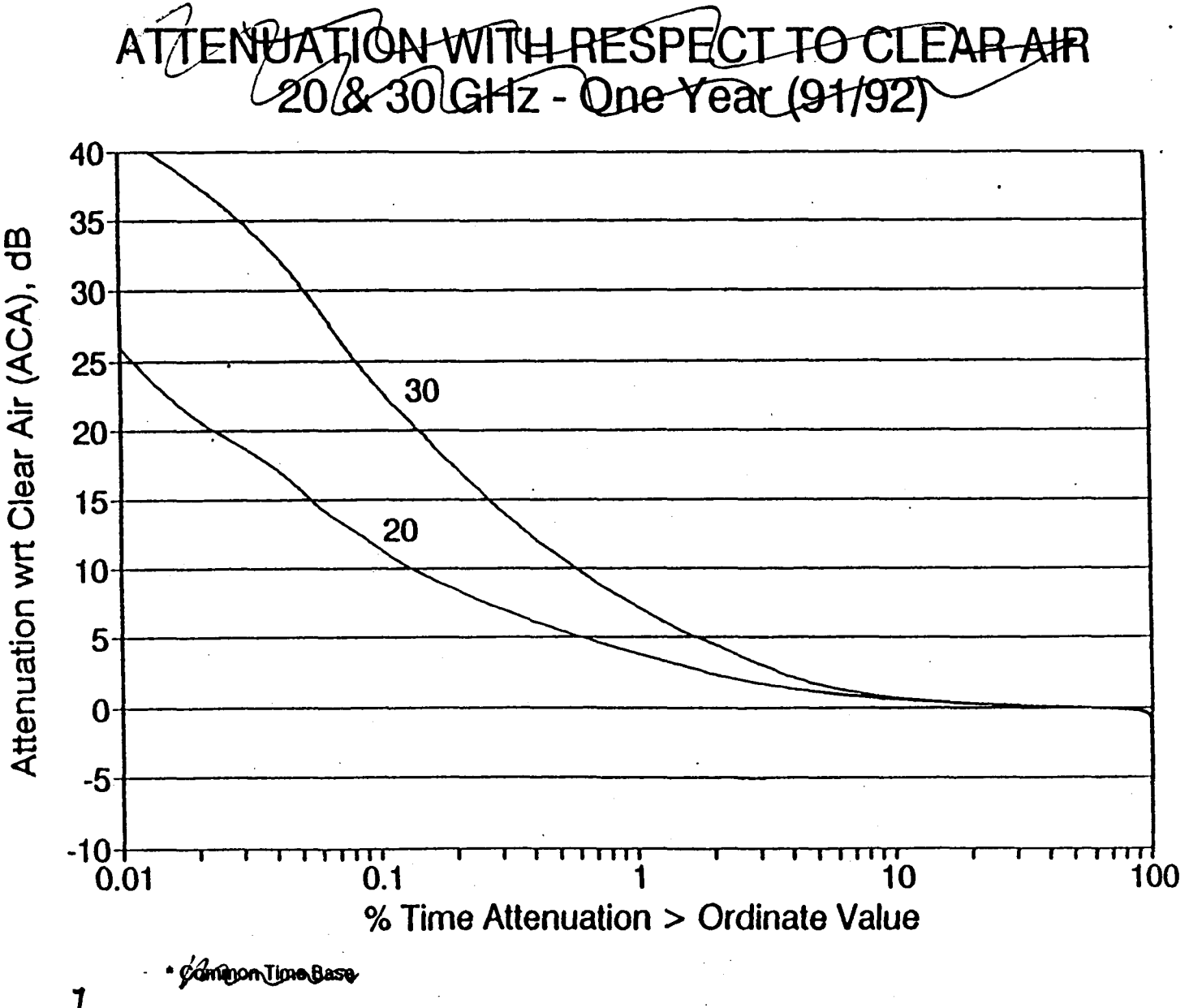

Figure 1 Attenuation with Respect to Clear Air, 20 & 30 GHz - One Year (91/92)

Fig 2

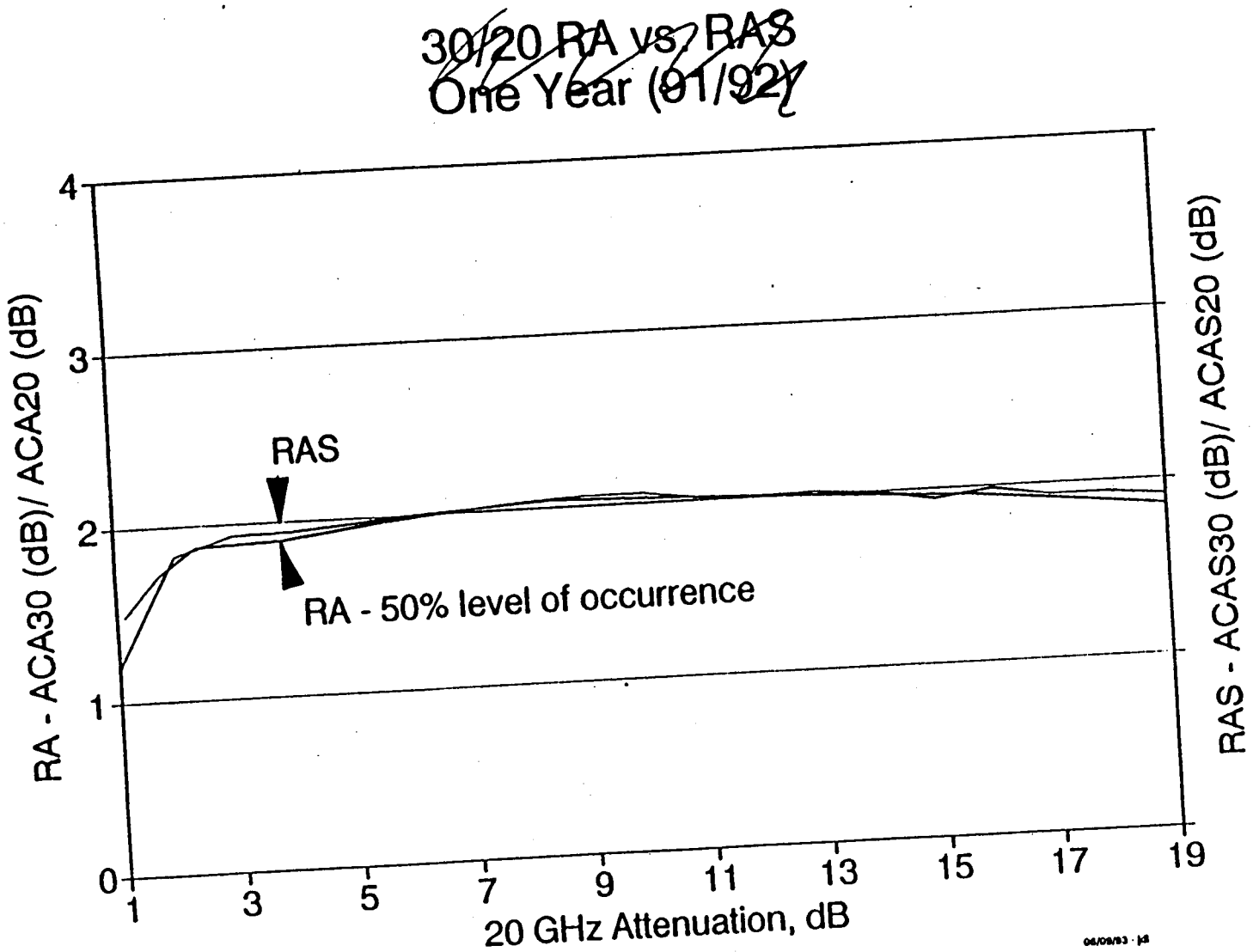

Figure 2 30/20 *RA* 50% Level of Occurrence & *RAS* vs. ACA20 - One Year (91/92)

ACTS PROPAGATION TERMINAL

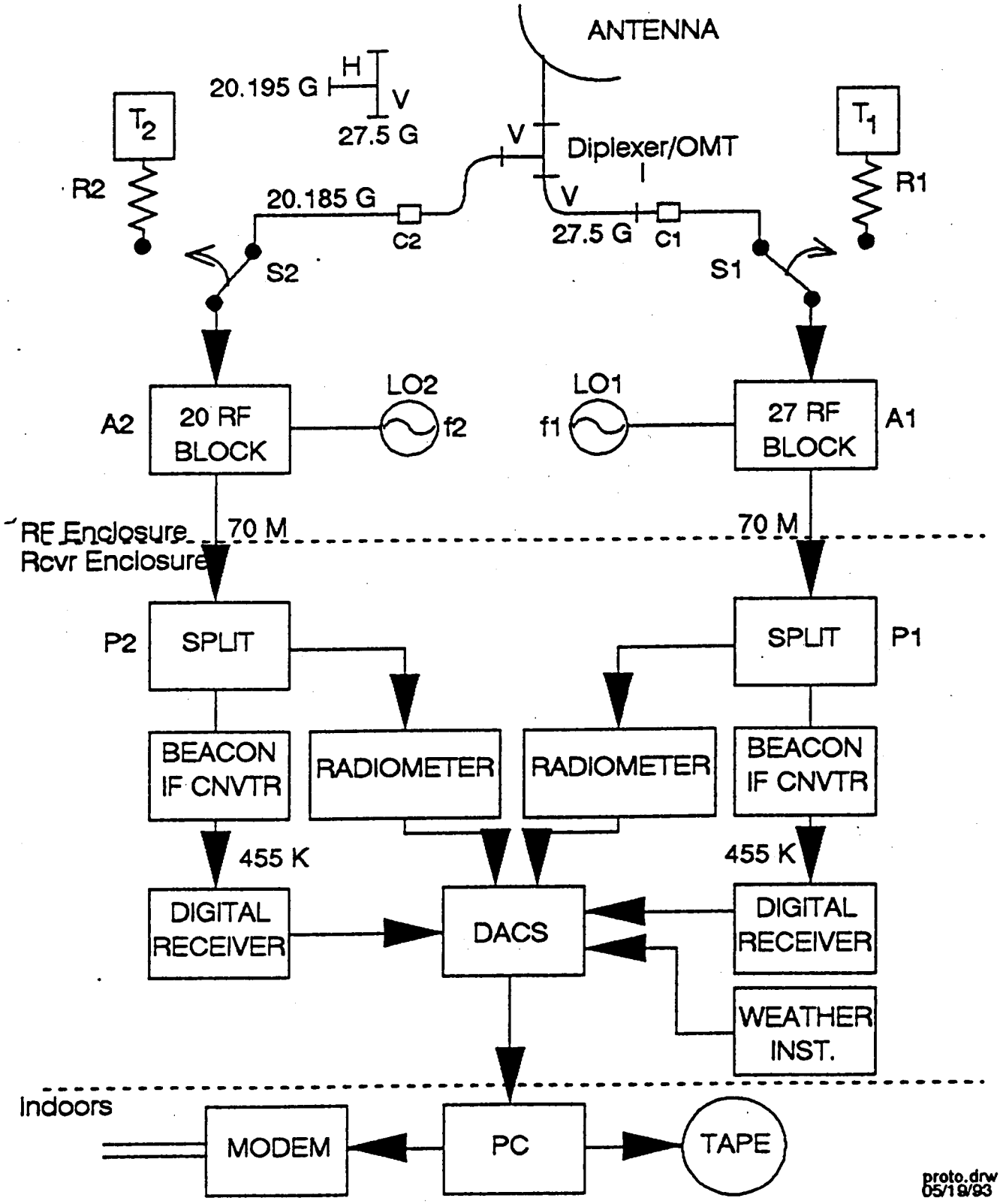

Fig 3. ACTS Propagation Terminal Block Diagram

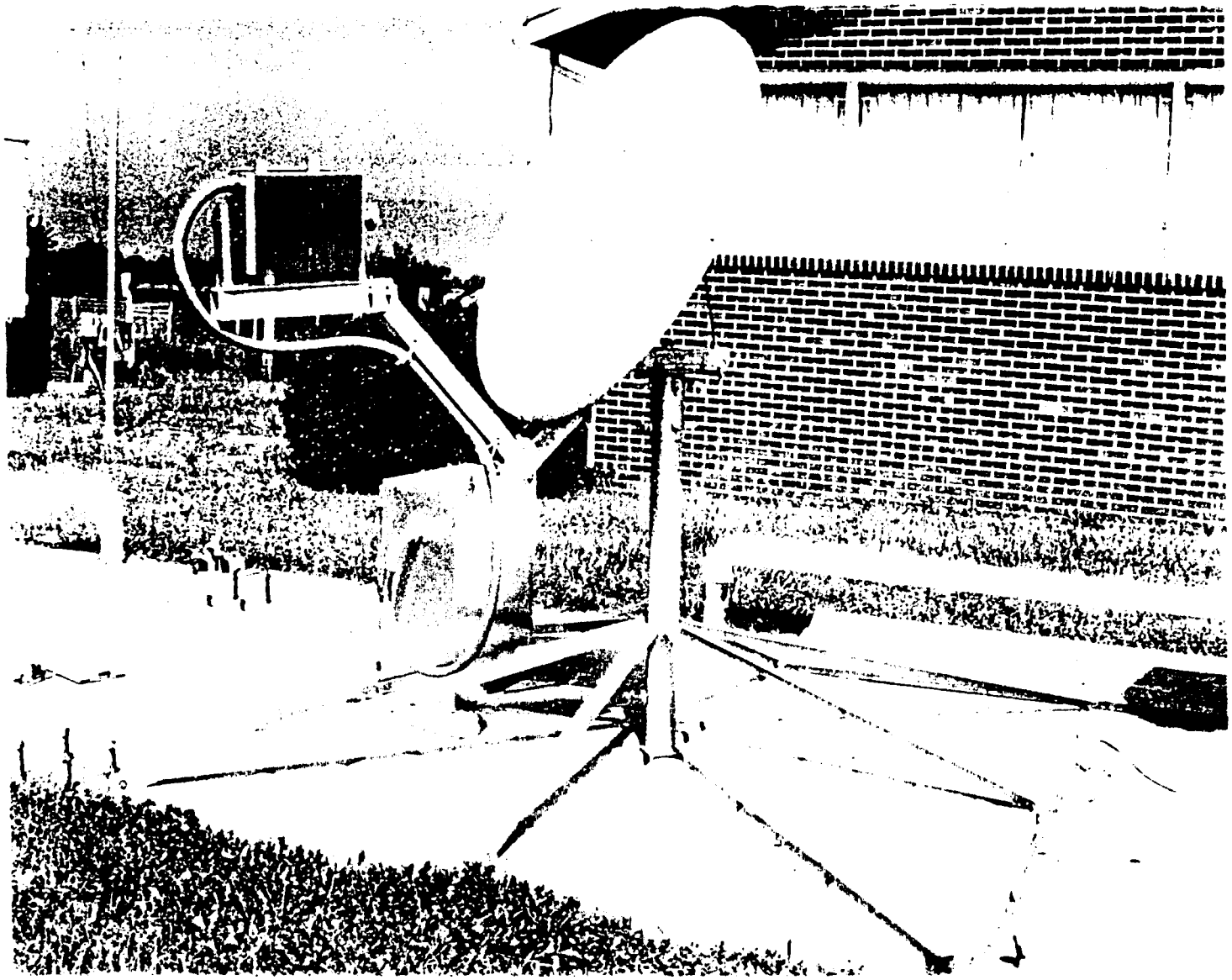

Fig 4. The ACTS Propagation Terminal (APT)

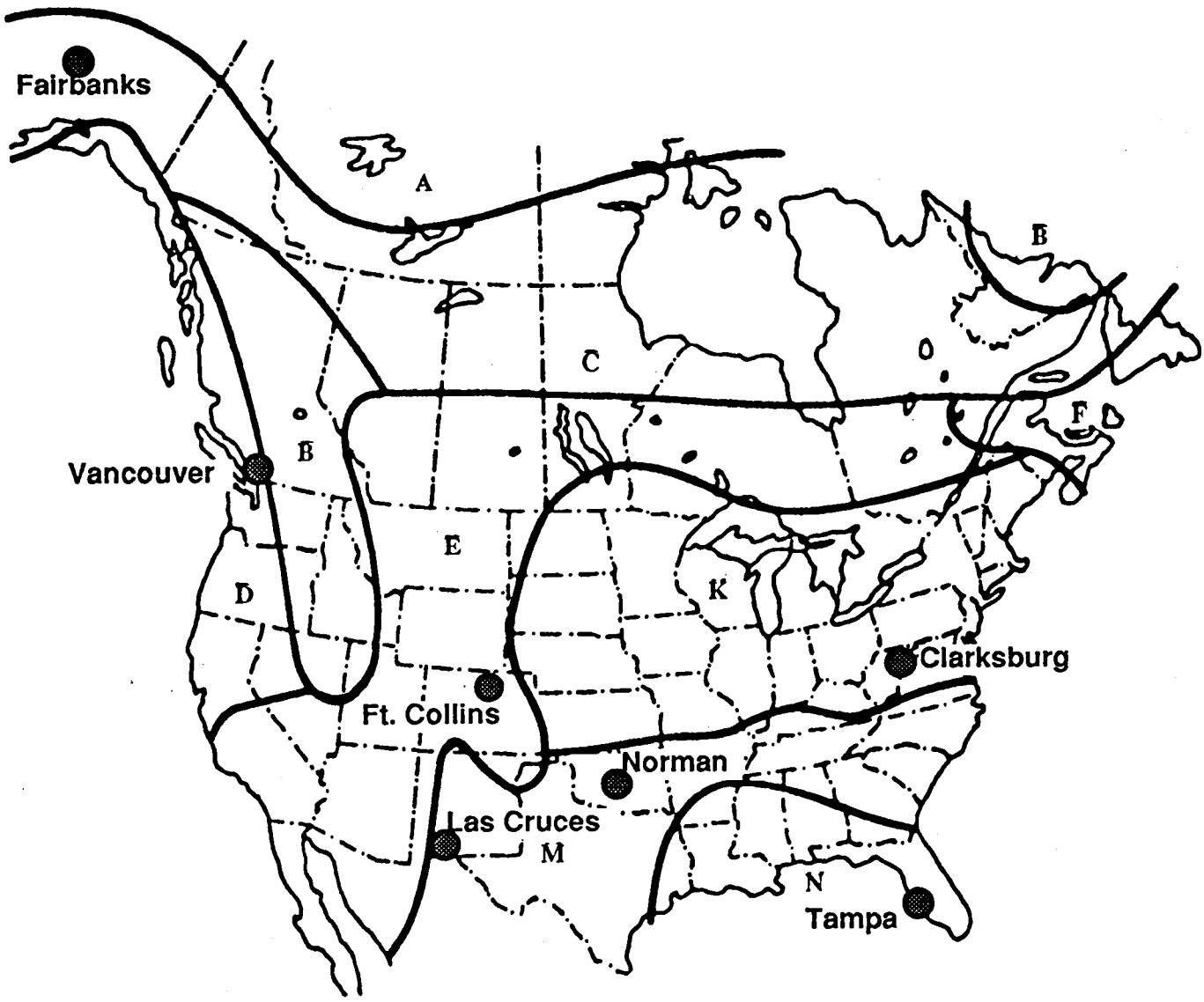

Figure 5. ACTS Propagation Experiment sites and the ITU-R Rain Climate Zones

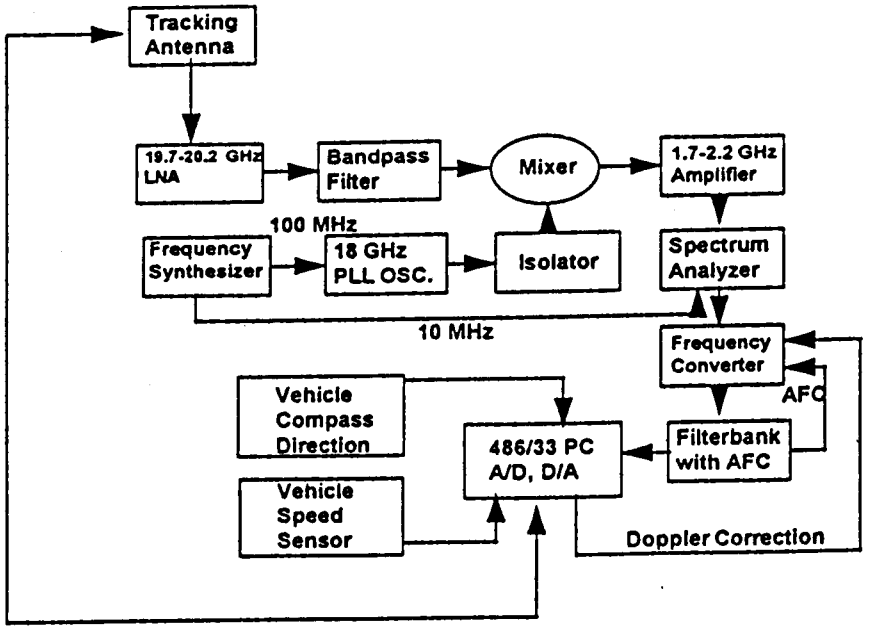

Figure ~~7~~ 6. Block diagram of the mobile receiver system.