THE NEW MILLENNIUM PROGRAM: AN OVERVIEW

E. Kane Casani
Jet Propulsion Laboratory, California Institute of Technology
4800 Oak Grove Drive, I 80-404
Pasadena, California 9 I I 09
818-354 -')023

Abstract

The National Aeronautics and Space Administration (NASA) has established the New Millennium Program (NMP), a science-driven technology-validation program that is designed to accelerate the availability of technology needed for NASA's science missions of the 2 1st century. Through a series of deep space and Earth orbiting flights, NMI' will validate suites of advanced technologies in order to help lower the risks and costs to future missions that use them. Since its inception less then two years ago, the NMP has moved ahead quickly to create implementation elements and processes to identify, develop, deliver, and validate these advanced technologies for flight, and has so far defined the first two deep space and the first Earth orbiting flights, which are currently in the design and development process.

INTRODUCTION

The objectives of the New Millennium Program are to enable 21 st-century science missions through the identification and validation of advanced technologies selected for flight application. The NMP will focus on new, breakthrough technologies that contribute significantly to reducing tbc cost while increasing the relative scientific capabi lit y of future space and Earth science missions. NMI' technology-validation flights will also provide opportunities to capture meaningful science by demonstrating technologies in a manner that emulates their intended scientific USC. New technologies will be infused into the nation's commercial base, and significant benefits to US industrial competitiveness will be realized through the joint development program. The New Millennium Program will also pioneer new ways of' partnering with industry, nonprofit organizations, academic institutions, and other government agencies.

'1 he program will focus on affordable future science missions through an emphasis on:

- Reduced development costs through the use of validated technologies and enhanced processes, including streamlined management and system engineering practices
- Reduced launch costs through lowering, spacecraft mass and payload
- Reduced operations costs through greater spacecraft autonomy
- Enhanced scientific capability

PROGRAM IMPLEMENTATION STRUCTURE

The New Millennium Program is unique among technology validation programs in that it follows a science-driven vision. A team of scientists, known as a science working group, was created to articulate NASA's science vision of space exploration and Earth observation for the 2 1st century. The scientists have identified the capabilities required by future missions to enable them to achieve this vision. After the capabil it ies are ident ified, advanced technologies are selected from a national "pipeline," which consists of technology programs of NASA, other government agencies, industry, nonprofit organizations, and academia, and are developed and delivered for flight by New Mill ennium Program integrated product development teams.

The program management responsibility has been assigned by NASA to the Jet Propulsion Laboratory (JPL,), which has created and organized the program's implementation structure and its participation] with other NASA centers, particularly the Goddard Space Flight Center (GSFC), government agencies, industry, and academia. The program validates technologies needed for both the future space science as well as future Earth science missions of

NASA, and GSFC's role is primarily to implement NMP S Earth orbiting flights and develop the capabilities needed by NASA's Office of Mission to Planet Earth's future missions.

Science Working Group (SWG)

The SWG articulates a vision and formulates the needs for NASA's missions of the 21st century by assimilating information from the plans of the NASA space science programs: The Solar System Program, the Origins Program, the Sun-Earth Connection Program, and the Structure and Evolution of the Universe Program. The SWG provides this information to the NMP S integrated product development teams and the architecture development team, which then defines and develops an initial set of candidate technology validation flights that will serve as "test vehicles" for the technologies. The SWG then assesses the potential science return of these flights and their value to future science missions, making further recommendations. NASA Headquarters, however, makes the final selection of the technology validation flights that NMP will implement. The SWG will also assist in the transfer of technologies validated on the NMP flights. Flight project-specific science advisory teams and mission science teams, which are appointed later in the selection process, when the flights are better defined, assist in evaluating the technologies to be flown, in the design of the validation flight itself, and in transferring the validated technologies to the potential users.

The NMP has developed a process for defining and selecting the technology validation missions see Figure 1 below). This process is driven by the output of the SWG, the integrated product development teams. and the architecture development team.

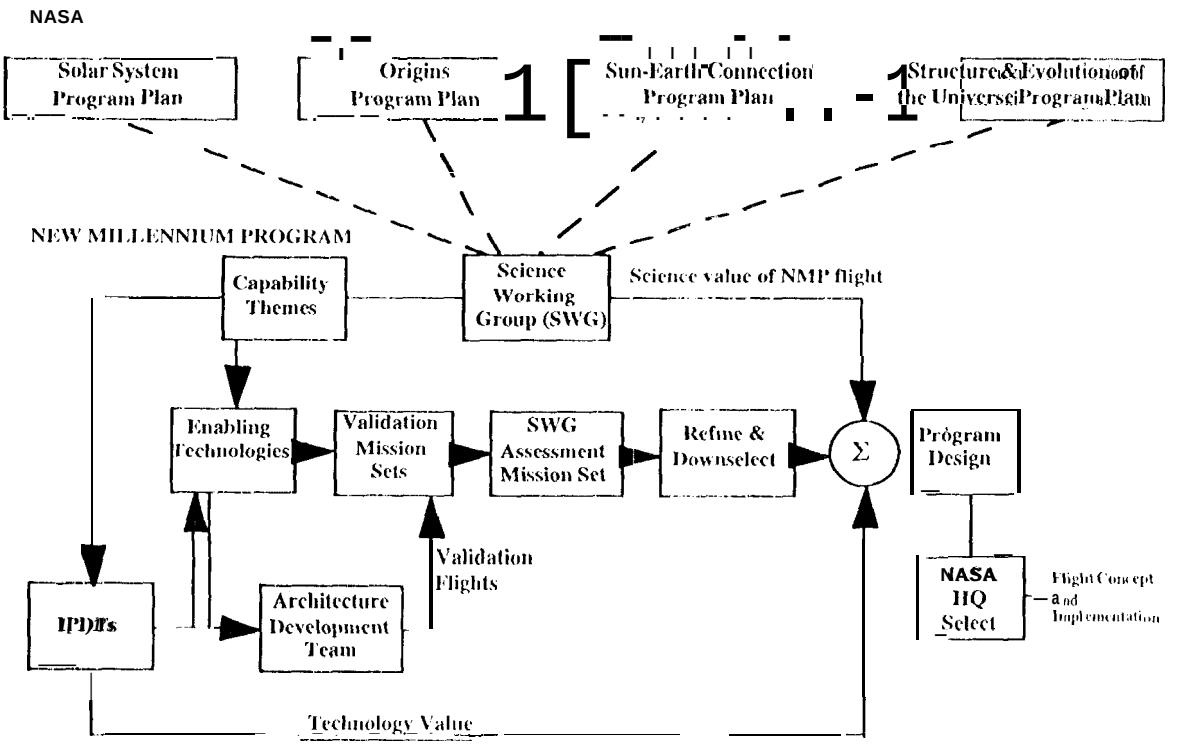

FIGURE 1. Science Working Group Participation in the Mission Selection Process.

Integrated Product Development Teams (IPDTs)

Integrated Product Development Teams have been formed around six key technology areas that the New Millennium Program is focusing upon: 1) Autonomy, 2) Microelectronics, 3) Communications, 4) In situ Instruments and Microelectromechanical Systems, 5) Instrument Technologies and Architectures, and 6) Modular and Multifunctional Systems. The IPDTs have a membership made up of individuals from government, industry, and academia, and the teaming concept serves as a vehicle to bring representatives from these three fields together

with the common goal of identifying high pay-off technologies, developing a roadmap---a phased technology development plan needed to achieve a required capability---for each technology under their area of development (Casani 996), advocating technologies for flight validation. and performing the validation of technologies selected for flight. They will also assist in the transfer of technologies validated by the NMP

Today these 11'1)'['s have been operating cooperatively for more than one year and have overcome organizational and cultural obstacles, which could have negatively infected this teaming arrangement. Instead, the benefits of government, industry, aod academia working together as an integrated team have proven to far outweigh the shortcomings Of such a concept, since the members of each team are working toward a higher goal than jest their owo "local" area of interest. Participation in the teams is proving to be mutually beneficial to all parties. Industry gets a close look early on io the technology-development process at what drives the government technology needs, government can shape or slightly modify its requirements for a better alignment with industry's commercial direction; and academia cao bring its intellectual and research perspective to the technology-development process sooner and in a more application-oriented environment.

The IPDTs' membership will be modified periodically as technologies are validated and priorities evolve reflecting advances in the technology and science vision.

Architecture Development Team (ADT)

The Architecture Development '1'earn creates candidate validation flights, based on input from the IPDTs and [Ire SWG, which will serve as "test tracks" for suites of advanced technologies. These flights arc designed to exercise the selected technologies as thoroughly as possible and in a manner that is similar to what might be required of thcm during a future science mission. '[hough the flights arc designed primarily to demonstrate the technologies, they will also attempt to gather science information (Ridenoure 1996).

FLIGHT PROJECTS

The Flight Projects arc charged with executing the validation flights for the NM I', and they have end-to-end mission design, spacecraft design, launch, and operations responsibility. J})l. will implement the deep space flights, and GSFC will implement the Earth orbiting flights. NMP's goal is to launch a deep space aad Earth orbiting fli.gilt every 12 to 18 months, starting in I 998 for the deep space program and in 1 999 for the Earth orbiting program. Each flight project will select a primary industry partner to work with to implement the project,

Deep Space Flight One

The first of the Ncw Millennium deep spare nights, currently known as DS1, will fly by the asteroid McAuliffe aod

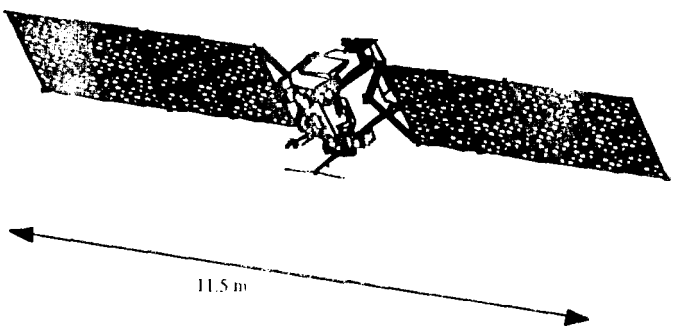

FIGURE 2. DS1 in Flight Configuration - Asteroid-Comet Flyby

the comet Kohoutek-West-Ikemura. It is being developed by JPL in partnership with Spectrum Astro, inc. and is scheduled for launch in July 1998 on a Delta 7326 (see Figure 2). Among the advanced technologies to be tested on DS1 are a solar electric propulsion system that, once validated, will allow the use of smaller launch vehicles anti enable shorter trip times for future missions, high power solar concentrator arrays (SCARLET), a miniature integrated imaging camera and spectrometer, a miniature integrated ion and electron spectrometer, a small deep space transponder for telecommunications, a Ka-band solid state power amplifier, a 3D-stack computer, a multifunctional structure, and various types of onboard autonomy, such as one that enable autonomous guidance, navigation and control (i .chman 1996).

Deep Space Flight Two:

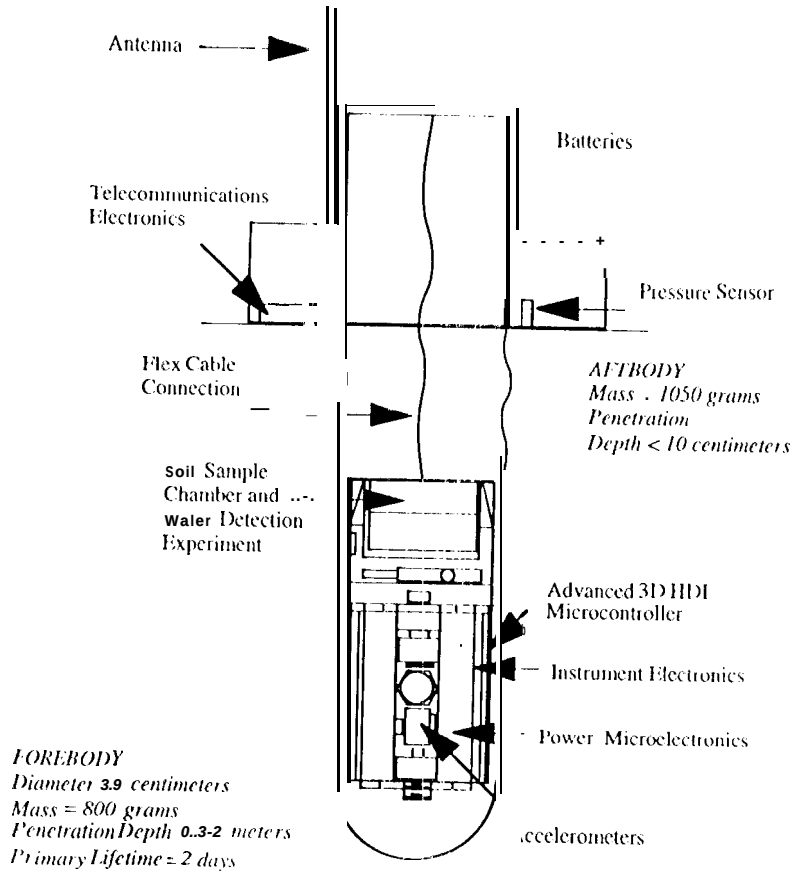

FIGURE 3. DS2 - Mars Microprobes

The second deep space flight will demonstrate planetary micropenetrator technologies. Two microprobe, each consisting of a very low mass aeroshell and penetrator system, are planned to launch in January 1999 and arrive at Mars in December 1999. They will be carried "piggyback" on the Mars Surveyor Lander spacecraft. The kilogram probes will separate from the Lander upon entry into Martian atmosphere and punch through the aeroshell upon impact on the Martian surface. They will separate into a forebody and aftbody system, connected by a flex cable (see Figure 3).

Among the highly-miniaturized advanced technologies to be validated on the microprobes for future micropenetrator networks are primary batteries, power electronics, control and data handling microelectronics, telecommunications equipment, an antenna, and a science payload package (Gavit 1996). Lockheed Martin Electro-

Optical Systems has just been selected as the primary industry partner for participation in the integration and testing program for the Mars microprobes.

Earth Orbiting Flight One (EO1)

The first Earth orbiting flight, which is being implemented by the Goddard Space Flight Center, features a multi-component land-imaging instrument known as an Advanced Land Imager (ALI). It is expected to launch during the first half of' I 999 and has as its primary industry partners Swales & Associates, Inc. (SAI) and Litton Amecom (Litton), whose technological capabilities complement each other and together represent a total spacecraft development and integration capability.

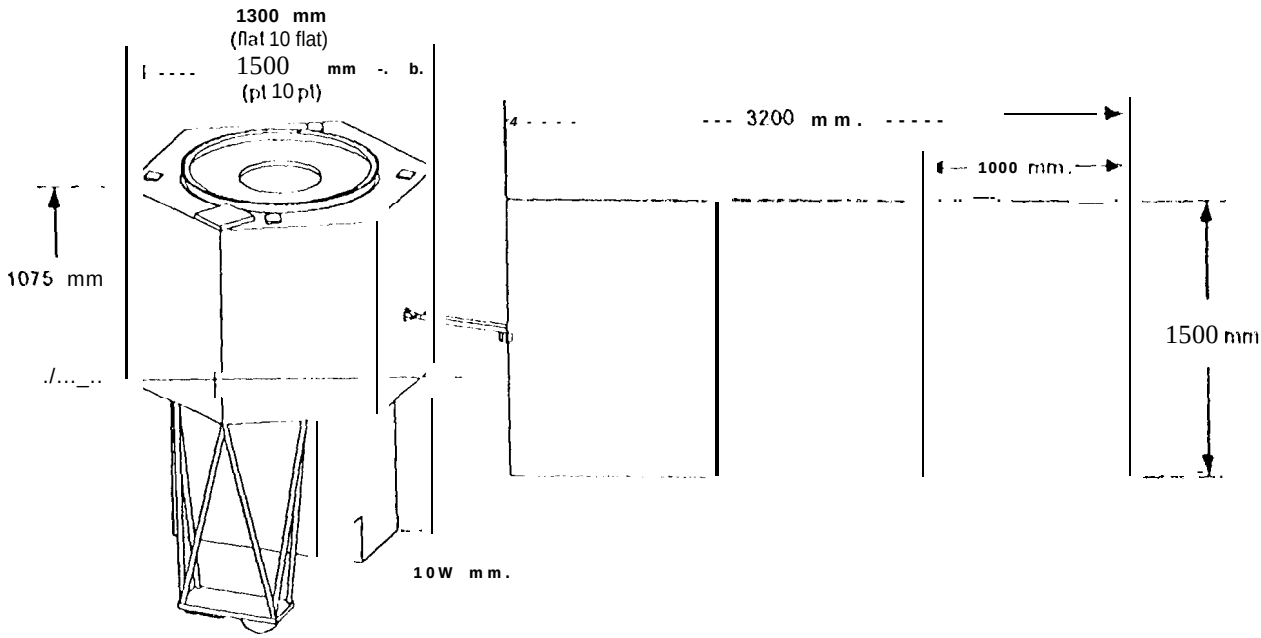

FIGURE 4. EO I - Advanced Land Imager Deployed Spacecraft Configuration

The ALI instrument will serve multiple purposes, such as providing remote-sensing measurements of the Earth that arc consistent with data collected by the Landsat "series of satellites. Among the advanced technologies that it will demonstrate and flight validate arc a grating image spectrometer, an atmospheric corrector, a carbon-carbon radiator, a pulsed plasma thruster, a lightweight solar array, and an X-band phased array transmitter. EO1 will launch a few months after the Landsat 7 satellite and will autonomously maintain a position approximately one minute behind Landsat 7 with the same groundtrack as Landsat 7. Once in orbit, EO I will provide 100-?.00" paired scene comparisons with the Landsat 7 to establish the suitability of the ALI multispectral technology for incorporation into future Landsat follow-on missions.

CONCLUSION

NASA's New Millennium Program will serve as a catalyst for the development of advanced technologies needed for the ambitious space and Earth science missions of the next century, missions that NASA expects to be launched more frequently, return a higher rate of science information, and be lower in cost. NMP will implement a series of validation flights in which these technologies will be demonstrated and validated, and in which some science data is expected to be returned. The program is also doing business in a new way, following the "faster, better, cheaper" approach to space exploration, and is working closely together with industry and academia towards a joint goal that

will be beneficial for the nation through increased US economic competitiveness and lower costs to the public for the space program.

Acknowledgment

The work described in this paper was carried out by the members of tbc New Millennium Program at the Jet Propulsion Laboratory, California Institute of Technology and the Goddard Space Flight Center, under a contract with the National Aeronautics and Space Administration.

References

Casani, Ii K., B.A. Wilson, et. al (1996) *New Millennium Microspacecraft Technology*, JPL I)-13879, AIAA 34th Aerospace Sciences Meeting, Reno, NV

Ridenoure, R.W. (1996) "Key Architectural Trade-Offs for the New Millennium Advanced Technology-Validation Missions," in *New Millennium Microspacecraft Technology*, JPL I)- 13879, A IAA 34t h Aerospace Sciences Meeting, Reno, NV

Lehman, 1).1 1. and M.[). Rayman **(1996)** "NASA's First New Millennium I)cci~-Space Technology Validation Flight," in *I* 'me. *Second IAA International Conference on Low-Cost Planetary Missions*, I AA - L-0502, International Academy of Astronautics, Laurel, Maryland, 16-19 April 1996

Gavit, S.A. and G.E. Powell (1996) "The Mars Microprobe Mission: A Unique Solution for Network Science," in *Proc. Second IAA International Conference on Low-Cost Planetary Missions*, I AA- 1,-0906, International Academy of Astronautics, Laurel, Maryland, 16-19 April 1996