Total Variance: a Progress Report on a New Frequency Stability Characterization*

D. A. Howe†
Nat'l Inst. of Standards and Technology
325 Broadway, Boulder, CO 80303
E-mail: dhowe@nist.gov

C. A. Greenhall‡
Jet Propulsion Laboratory (Caltech)
4800 Oak Grove Dr., MS 298-100, Pasadena, CA 91109
E-mail: Charles.Greenhall@jpl.nasa.gov

November 18, 1997

Abstract

We give results of recent work on a newly developed frequency stability characterization, called Total variance, whose main advantages are improved confidence at and near the longest averaging time of half the data duration, and lower sensitivity to drift removal. Properties given here, for the standard FM noise types, include mean, degrees of freedom, frequency response, and empirical distribution function.

1 Introduction and Conclusions

This paper is about characterizing common, difficult to characterize frequency noise modulations found at long-term averaging time τ in the output signal of many laboratory frequency standards. It assumes a familiarity with the Allan variance and its characterizations of white, flicker, and random walk FM noise models (WHFM, FLFM, and RWFM) [1].

*Contribution of the U.S. Government, not subject to copyright.

†This author is with the Time and Frequency Division.

‡The work of this author was performed at the Jet Propulsion Laboratory, California Institute of Technology, under a contract with the National Aeronautics and Space Administration.

A shortfall of the currently recommended [2] Allan variance for τ, denoted here by Avar (T), is that the usual estimators of it are highly variable at large τ [1, 3, 4] and are sensitive to the method of drift removal [5]. We report statistical properties of a new kind of frequency variance, inherently dependent on measurement duration T as well as T, called Total variance anti denoted hereafter by Totvar (T, T) (pronounced tōt´-vär). We quantify the improvement in the uncertainty on frequency-stability estimation from the use of Totvar (τ, T) rather than Avar (τ) in the presence of FM noises. The square root of this variance, called Total deviation and denoted by Totdev (τ, T) or the! recommended [2] notation $\sigma_{y,\mathrm{TOTAL}}(\tau)$, can be interpreted like the Allan deviation $\sigma_y(\tau)$ but with improved confidence at long-ter'in τ, as pointed out in earlier papers [6, 7] and quantified in this paper for FM noises. Not addressed here is the important property that Totvar (T, T) appears to have considerably less sensitivity to the method of drift removal than Avar (τ) [8].

The main advantages of Totvar over Avar are improved confidence at and near the longest averaging time of $\tau = T/2$, and lower sensitivity to drift removal. By theory and simulation we have computed its mean, variance, and empirical probability distribution in the presence of the three FM noises. Variance results are given in terms of equivalent degrees of freedom [9]. In the presence of white FM noise modulation, Total variance is an unbiased estimate of the Allan variance for all τ, yet has three degrees of freedom instead of one at $\tau = T/2$. For all three noise types, the mean and edf of Totvar arc given by simple exact or empirical formulas. A comparison of the empirical distribution of Totvar($T/2, T$) with the appropriate chi-square distribution indicates that confidence intervals based on chi-square levels are conservative.

In the established tradition of time and frequency statistics, frequency stability is described in terms of finite-difference variances that are ensemble or infinite-time averages of stationary, ergodic increments of phase [12, 13, 14]. In particular, the theoretical Allan variance is a number that depends only on τ, While! its conventional estimators arc! random variables that depend 011 both τ and T, the largest possible τ being $T/2$. Total variance is a random variable that, alo ıg with all its properties, inherently depends on both τ and T. Moreover, Total variance can report values beyond the usual Allan variance last-τ value of $\tau = T/2$; its values at $\tau > T/2$ might be used to augment the normal last-τ value of frequency stability reported at $\tau = T/2$.

We compute the frequency response of Total variance as a function of τ by averaging the squares of the Fourier transforms of Total variance

sampling functions, and find that it resembles the frequency response of Allan variance. The results of these investigations indicate that Total variance, while it has an interpretation like that of the Allan variance, also has lower variability and less sensitivity to drift removal.

2 Equations for Totvar (τ, T)

The purpose of this section is to give a precise definition of Totvar (τ, T) for an N-point time deviation record with sample period τ_0. In the following description, the indices m, n, and N ate related to time by $\tau = m\tau_0$, $t = t_0 + n\tau_0$, and $T = N\tau_0$, where t_0 is the time origin and without loss may be made equal to zero.

Start with time-deviation data x_n, for $n = 1$ to hr. Define a new, longer virtual data sequence x_n^* as follows. For $n = 1$ to N let $x_n^* = x_n$; for $j = 1$ to $N - 2$ let

$$x_{1-j}^* = 2x_1 - x_{1+j}, \quad x_{N+j}^* = 2x_N - x_{N-j}.$$

This operation, depicted in Figure 1, is called *extension by reflection about both endpoints.* The result of this extension is a virtual data sequence $\{x_n^*\}$ of length $3N - 4$, whose index n now runs from $3 - N$ to $2N - 2$.

Now define

$$\text{Totvar}(m, N, \tau_0) = \frac{1}{2(m\tau_0)^2(N-2)} \sum_{n=2}^{N-1} (x_{n-m}^* - 2x_n^* + x_{n+m}^*)^2 , \quad (1)$$

for $1 \leq m \leq N - 1$, i.e., τ can go to $(N - 1)\tau_0$ instead of the usual limit of $\lfloor (N-1)/2 \rfloor \tau_0$. The previous notation Totvar (τ, T) is to be regarded as equivalent to (1) with the dependence on τ_0 suppressed. Totvar can also be represented in terms of extended fractional frequency fluctuation averages as

$$\text{Totvar}(m, N, \tau_0) = \frac{1}{2(N-2)} \sum_{n=2}^{N-1} (\bar{y}_n^* - \bar{y}_{n-m}^*)^2, \quad (2)$$

where $\bar{y}_n^* = (x_{n+m}^* - x_n^*)/\tau$.

It can be verified that Totvar, like Avar and its estimators, is invariant to an overall shift in phase and frequency, i.e., if a first-degree polynomial $c_0 + c_1 n$ is added to the original data set x_n, then Totvar does not change.

We expect the Total variance to be applied mostly to long phase records in which the FM noises dominate the PM noises (white and flicker PM). In this case it is convenient for theoretical purposes to approximate

Totvar (m, N, τ_0) by a continuous-time analog called Totvarc (T, T), in which the sum in (1) is replaced by an integral, and dependence on τ_0 is eliminated. The time deviation is now a continuous-time process x (t), given for $0 \leq t \leq$ T. Extend $x(t)$ to $x^*(t)$ as follows: for $0 \leq t \leq T$ let $x^*(t) = x(t)$; for $0 < 21 < 7'$ let $x^*(-u) = 2x$ (o) $- x(u)$ and $x^*(T + u) = 2x(T)$ --z' $(T - u)$. *Then* $x^*(t)$ is given for $-T \leq t \leq 2T$. The continuous analog of Totvar is defined by

$$\text{Totvarc}(7_, T) = \frac{1}{2\tau^2 T} \int_0^T [x^*(t - \text{T}) - 2x^*(t) + x^*(t + \tau)]^2 \, dt, \quad (3)$$

for $0 < \tau \leq T$.

The expressions above are quite different from their equivalent Allan variance expressions. Mainly, Totvar (T, T) reports a value for an interval T within data length T based on more samples of the! second-difference of phase (or first-difference of average frequency) using a rearranged and extended series of the original data series $\{x_n\}$. It does this by a multiple sample on the phase using a larger, virtual set of data which is an odd, or reflected, extension at the beginning and end (left and right) of tile original real set. Figure 1 illustrates the extension and, hence, the resulting; circular or repeating representation.

Analyzing a larger virtual data set built from the original data set has been a tool in frequency-domain signal processing for many years. A n assumption of periodicity replaces the recurrent behavior (in a time-series sense), a consequence of the ergodic principle [15]. In particular, a range of frequency values (Fourier components) from $0 < f < f_h$ can be extended by a mirror reflection through $f = 0$ so that "negative frequencies" are added to an original data set, resulting in $-f_h < f < f_h$. In the context of time-series analysis, rather than doing extensions of the original vector $\{x_n\}$ and applying the straight second-difference, we alternatively can resample within the original vector; see Section 4 for an algorithm that requires no extension of the data array.

3 Totvarc (τ, T) as an Estimator of Avar (τ)

3.1 Mean and Variance

As mentioned above, for computing theoretical moments it is convenient to use the continuous-time random variable Totvarc (T, T) as a surrogate for the discrete-time random variable Totvar (T, T), for the same reason that the calculus of integrals and derivatives is less intricate than the calculus

of sums and differences. 'he mean and variance of Totvarc (T, T) in the presence of the three standard power-law FM noises were computed by the generalized autocovariance method [4] under the assumption of Gaussian, mean-zero second differences of phase; no frequency drift or drift removal is allowed. The mean E[Totvarc (T, T)] is compared to Avar (T); the variance is most conveniently communicated through the equivalent degrees of freedom (edf), defined for a random variable V by

$$\text{edf (v)} = \frac{2(EV)^2}{\text{var}(V)}. \tag{4}$$

The results, some of which are exact and some of which are empirical fits to numerically computed results, can be expressed as follows.

$$\frac{E[\text{Totvarc}(\tau, T)]}{\text{Avar}(\tau)} = 1 - a\frac{\tau}{T}, \quad 0 < \tau \leq \frac{T}{2}, \tag{5}$$

$$\text{edf}[\text{Totvarc (T, } T)] = b\frac{T}{\tau} - c, \quad 0 < \tau \leq \frac{T}{2}, \tag{6}$$

where a, b, and c are given in Table I. These results were checked by simulations of Totvar (m, N, To), with N = 101.

Table I

Noise	a	b	c
WHFM	0	3/2	0
FLFM	1/(3 111(2))	24 $(\ln(2)/\pi)^2$	0.222
RWFM	3/4	140/151	0.358

The simple, exact form (5) for the mean of Totvar can be interpreted as a scaling property of power-law noise. It turns out this way because tile shapes of the sample functions for Totvar and Avar (see Section 4) depend only 011 T. For 2"/2 < $\tau \leq T$ the sampling function shapes depend also 011 T; yet, it is noteworthy that (5) persists all the way to T, but only for white FM and random walk FM. The edf results are empirical, with an observed error below 1.2% of numerically computed values; for white FM, though, the edf result appears to be exact, although this is unverified.

For white FM noise processes, Total Variance is an unbiased estimate of the traditional Allan Variance (frequency-change-squared vs. τ) for all averaging times (T's). Its primary advantage as surmised from (6) and Table I is a considerable improvement in the confidence of that estimate at longer averaging times. For example, 10,000 seconds of frequency measurements means that T can't go beyond 5,000 seconds ($T/2$) to get one single

estimate of frequency-change over the data duration (last half minus first half) using Allan. The above edf result (6) for white FM shows that one obtains the equivalent of three independent estimates (edf = 3) by using Total and its multi-sampling function, which is discussed in the next section. The improvement of edf in the presence of FLFM and RWFM (2.097 and1.514, respectively) is not as dramatic, but substantial nevertheless. For $\tau = T/4, T/8$, etc., the confidence measures of Allan and Total confidence approach each other, until they are essentially the same at $T/16$. For small values of τ/T, the time-deviation record is extended only a short distance at both ends, and hence Totvar (τ, T) differs little from tile fully overlapped estimator of Avar (τ) [9].

3.2 Distribution Functions

In the tradition of time and frequency statistics, it is customary to derive confidence intervals for frequency stability 011 the basis of the assumption that the probability distribution of a frequency stability estimator V, when scaled appropriately, follows the chi-square distribution) with the same edf as *V; see [9].* The chi-square assumption has been investigated in a limited way for conventional estimators of Allan variance [10, 11]; in view of the greater complexity of Total variance, some investigation of its distribution is appropriate.

Let V denote the Totvar estimator of Allan variance σ^2, for some τ, and let $r = E(V)/\sigma^2$, $\nu =$ edf (V), which are presumed known from the previous results. Then the random variable

$$X = \frac{\nu V}{r\sigma^2}$$

has the same mean and edf as clews a χ^2_ν, namely, ν. If X had the χ^2_ν distribution, then one could derive confidence intervals for σ^2 based on one observation of V.

We carried out a brief investigation of the chi-square assumption for the most important case of $\tau = T/2$. One thousand independent trials of Totvar (50,101) were simulated for the three FM noise types, and the empirical distribution functions of X were plotted along with the theoretical chi-square distribution functions. It turned out that the chi-square distributions were good fits to the empirical distributions except at the lower tails, expanded views of which are shown in Figure 2. The empirical tail always lies below the chi-square tail. Thus, for a probability $p \leq 0.2$, if $x_\nu(p)$ is the chi-square level for p, and $x^*_\nu(p)$ the level of the scaled Totvar X, we

have x_ν (p) < x^*_ν (p). Because the upper end of a true confidence interval for σ^2 is proportional to $1/x^*_\nu(p)$ for an appropriate value of p, the use of $x(p)$ for this purpose gives a conservative confidence interval. For example, suppose we wish to have a 90% confidence interval for σ^2 at $\tau = T/2$ based on V = Totvar (2"/2, T) and a white-FM noise assumption. Then r = 1, ν_0 = **3;** the 5% and 95% χ^2_3 levels are 0.352 and 7.81; and a 90% confidence interval for σ^2 based on chi-square is [3 V/7.81, $3V/.352$] = $[0.384V, 8.52\,V]$. (Take square roots for σ.) The more realistic value of 0.60 for the 5% Totvar level from Figure 2(a) reduces the upper end of the confidence interval to $5.0V$.

4 Sampling Functions and Frequency Responses

The procedure of extending by reflection an original $\{x_n\}$ vector at both ends ancl then applying a second difference can be equivalently represented as four different types of differencing on $\{x_n : n = 1, \ldots . N\}$ directly. 'he summand of Totvar (m, N, τ_0) in the following equation takes on four forms that depend on the relationship of n to a given m and N:

$$\text{Totvar}\ (m,\ N, \tau_0) = \frac{1}{2(m\tau_0)^2(N-2)} \sum_{n=2}^{N-1} D_n^2, \tag{7}$$

where

$$\begin{aligned}
D_n &= x_{n-m} - 2x_n + x_{n+m} &&: \quad m - n \geq 1,\ m + n \leq N,\\
D_n &= 2x_1 - x_{2-n+m} - 2x_n + x_{n+m} &&: \quad m - n < 1,\ m + n \leq N,\\
D_n &= x_{n-m} - 2x_n + 2x_N - x_{2N-n-m} &&: \quad m - n \geq 1,\ m + n > N,\\
D_n &= 2x_1 - x_{2-n+m} - 2x_n + 2x_N - x_{2N-n-m} &&: \quad m - n < 1,\ m + n > N.
\end{aligned}$$

From these expressions we can derive the frequency sampling funcions associated with Totvar (τ, T), i.e., how its terms act on $y_n = x_n - x_{n-1}$, ancl contrast them with the simpler sampling function associated with Avar (T) (see Figure 3), Which gives the change in average frequency from one T interval to the next [7]. The augmentation incorporated in Totvar (τ, T) combines the sequential sampling function with other ones which makes its sample technique rather bizarre, but nevertheless shown in Figure 4.

Although the time-domain presentation of the action of Totvar on frequency residuals seem to give little insight, one can use the Fourier transform of these sampling functions to derive frequency responses that perhaps

convey more meaning. The continuous analog version of Totvar(τ, T) can be written in the form

$$\text{Totvarc}(\tau, T) = \frac{1}{2\tau^2 T}\int_0^T dt \left[\int_0^T du\, y(u)\, h_y(u;\ t, \tau)\right]^2, \tag{8}$$

where $h_y(u; t, \tau)$ is the sampling function for $\nabla_\tau^2 x^*(t)$ (for the extended $x^*(\cdot)$ record) in terms of $y(u) = dx(u)/du$, $0 < u < 2'$. Let $H_y(f; t, \tau) = \int_0^T h_y(u; t, T)\, e^{-i2\pi fu} du$. One can show that the expected value is given in terms of $S_y(f)$, the one-sided spectral density of y (t), by

$$E[\text{Totvarc}(\tau, T)] = \int_0^\infty W_y(f; \tau, T)\, S_y(f)\, df, \tag{9}$$

where

$$W_y(f; \tau, T) = \frac{1}{2\tau^2 T}\int_0^T |H_y(f; t, \tau)|^2\, dt. \tag{10}$$

It follows that $W_y(f; \tau, T)$ can be regarded as the mean frequency response of Totvar as an action on y (t). Figure 5 shows this frequency response plotted against $f\tau$ for τ/T = 0.1, 0.2,... ,0.5. The frequency response of Allan variance (clotted curve) is the limit of Totvar response as τ/T + O. Also shown (clashed curve) is the frequency response of 2. Totvarc (T, T), regarded as an estimator of Avar $(T/2)$ (see Section 5 below).

Totvarc (T, T) has an approximate Allan-like response; more importantly Totvar hasn't the deep nulls encountered with Avar(τ) near $\tau = T/2$, consequently it has less variability, hence better confidence as indicated by an increased edf. We showed that the estimate (*vis-à-vis* E[Totvarc (T, T)]) *is* an unbiased estimate of Avar(τ) for WHFM noise and slightly biased for FLFM and RWFM noise. This may be somewhat evidenced by noting the slight reduction in the amplitudes of the main lobes of the frequency responses in Figure 5.

5 Properties of Totvarc (T, 7')

Although we have defined Totvar for τ all the way up to $(N - 1)\tau_0$, one can realistically expect to obtain meaningful frequency stability results only $\tau \leq T/2$. Nevertheless, we computed the mean and edf of Totvarc (T, T) for T/2 < $\tau \leq T$. For white and random walk FM, it turns out that twice Totvarc(T, T) is unbiased for Avar (T/2), and is almost unbiased (within a factor of 2/(31xI(2)) = 0.9618) for flicker FM. This result was motivated by

comparing the frequency responses Of 2. Totvarc (T, T) and Avar $(T/2)$, as seen in Figure 5. Unfortunately, Totvarc $(T$, T) has a smaller edf (1.5, 1.126, and 1.029 for WHFM, FLFM, and RWFM) than Totvarc (T/2, T) does, ancl hence the mean-square error (i.e, bias^2 -t variance) of 2. Totvarc (T, T) as an estimator of Avar (T/2) is greater than that of Totvarc (T/2, T), so that one might still prefer Totvarc (2"/2, T), or perhaps some linear combination of the two. This possibility has yet to be investigated, but other work indicates that Total variance coefficients beyond $\tau_0 = T/2$ could justifiably be incorporated in the last T/2 value usually reported. It has been shown that summing all the familiar "power-of-2" τ-values in a Total variance plot leads to exactly twice the standard sample variance much in the same way that integrating an estimate of a spectrum also yields the sample variance [18].

References

[1] D.B. Sullivan, D.W. Allan, D.A. Howe, and F. L. Walls (Editors), *Characterization of Clocks and Oscillators,* NIST 'Technical Note 1337 (1990; available from NIST, 325 Broadway, Boulder, CO 80303- 3328).

[2] E.S. Ferre-Pikal, J.R. Vig, et al., "Draft Revision of IEEE Std 1139-1988: Standard Definitions of Physical Quantities for Fundamental Frequency ancl Time Metrology- Random Instabilities," *Proc. 1997 IEEE Int. Freq. Cont. Symp.*, 338 357 (1997; in revision).

[3] D.A. Howe and D.B. Percival, "Wavelet Variance, Allan Variance, and Leakage," *IEEE Trans. Instrum. Meas.*, **IM-44**, 94 97 (1995).

[4] C.A. Greenhall, "A Structure Function Representation Theorem with Applications to Frequency Stability Estimation," *IEEE Trans. Instrum. Meas.*, **IM-32**, 364-370 (1983).

[5] M.A. Weiss and C. Hackman, "Confidence on the Three-Point Estimator of Frequency Drift," *Proc. 24th Ann. PTTI Meeting, 451-460 (1992).*

[6] D.A. Howe, "An Extension of the Allan Variance with Increased Confidence at Long Term," *Proc. 1995 IEEE Int Freq. Cont. Symp.* , 321-329.

[7] D.A. Howe, "Methods of Improving the Estimation of Long-term Frequency Variance," *Proc. 1997 European Frequency and Time Forum, 91-99.*

[8] D.A. Howe and K.J. Lainson, "Effect of Drift on TOTALDEV," *Proc. 1996 IEEE Intl. Freq. Control Symp.* 883 889.

[9] D.A. Howe, D.W. Allan, and J.A. Barnes, "Properties of Signal Sources and Measurement Method s," *Proc. 35th Freq. Cont. Symp.*, 1–47 *(1981;* reprinted in [1]).

[10] K. Yoshimura, "Characterization of Frequency Stability: Uncertainty Due to the Autocorrelation of the Frequency Fluctuations," *IEEE Trans. Instrum. Meas.*, IM-27, 1-7 (1978).

[11] W.V. Prestwich and T.J. Kennett, "The Statistical Properties of Allan Variance," *Canadian J. Physics 69, 1405 1415* (1991).

[12] J.A. Barnes, "Atomic Timekeeping and the Statistics of Precision Signal Generators," *Proc. IEEE* 54, 207-220 (1966).

[13] J.A. Barnes, A. H. Chi, L.S. Cutler, D.J. Healy, D. B. Leeson, T.E. McGunigal, J.A. Mullen, Jr., W. L. Smith, R.L. Sydnor, R.F.C Vessot, G.M.R. Winkler, "Characterization of frequency stability," *IEEE Trans. Instrum. Meas.*, **IM-20**, 105 120 (1971).

[14] J. Rutman, "Characterization of Phase and Frequency Instabilities in Precision Frequency Sources: Fifteen Years of Progress," *Proc. IEEE* **66**, 1048-1075 (1978).

[15] D.A. Howe, "Circular Representation of Infinitely Extended Sequences," *Proc. 1995 IEEE Intl. Freq. Cont. Symp. 337-345.*

[16] D.W. Allan, M.A. Weiss, and J.L. Jespersen, "A Frequency-domain View of Time-domain Characterizations of Clocks and Time and Frequency Distribution Systems," *Proc. 45th Freq. Cont. Symp.*, 667-678 (1991).

[17] D.A. Howe and K.J. Lainson, "Simulation Study Using a New Type of Sample Variance," *Proc. 1995 PTTI Meeting*, 279 *290.*

[18] D.B. Percival and D.A. Howe, "Total Variance as an Exact Analysis of the Sample Variance," *Proc. 1997 PTTI Meeting, this issue.*

Figure 1: (a) Extension of a phase record by reflection at both ends; (b) circular representation of extended phase record

Figure 2: Expanded views of the lower tails of empirical Totvar distribution functions (lower curves), and the corresponding chi-square distribution functions (upper curves)

Figure 3: Usual sampling given by Avar for values of m and n when $N=10$, $m < (N - 1)/2$

Figure 4: Sampling given by Totvar for values of m and n when $N=10$; note that m is not restricted to $m \leq (N-1)/2$ as with Avar

Figure 5: Mean frequency responses of Avar and Totvar as operations on $y(t)$

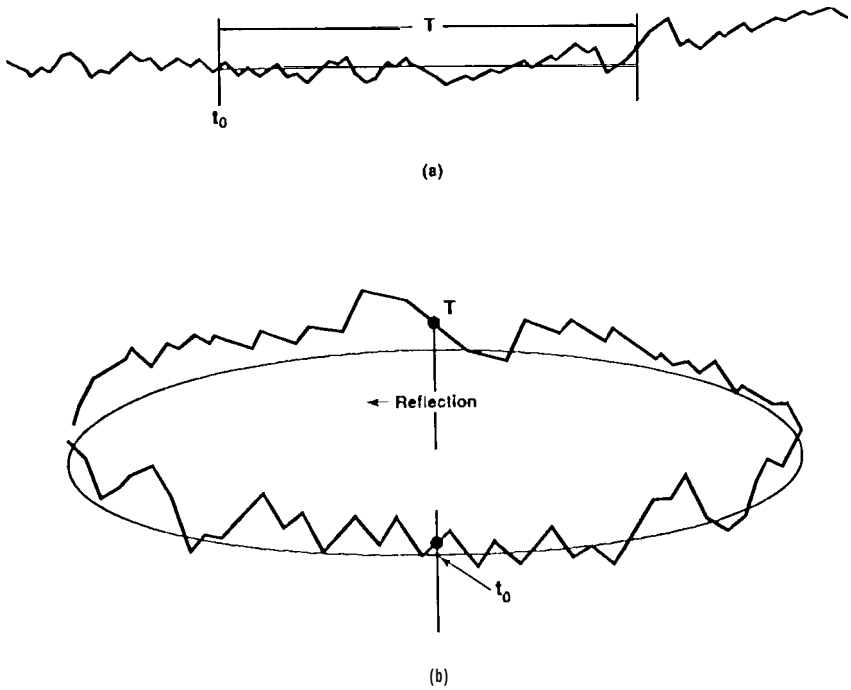
T
t_0
(a)
T
Reflection
t_0
(b)

Fig. 1

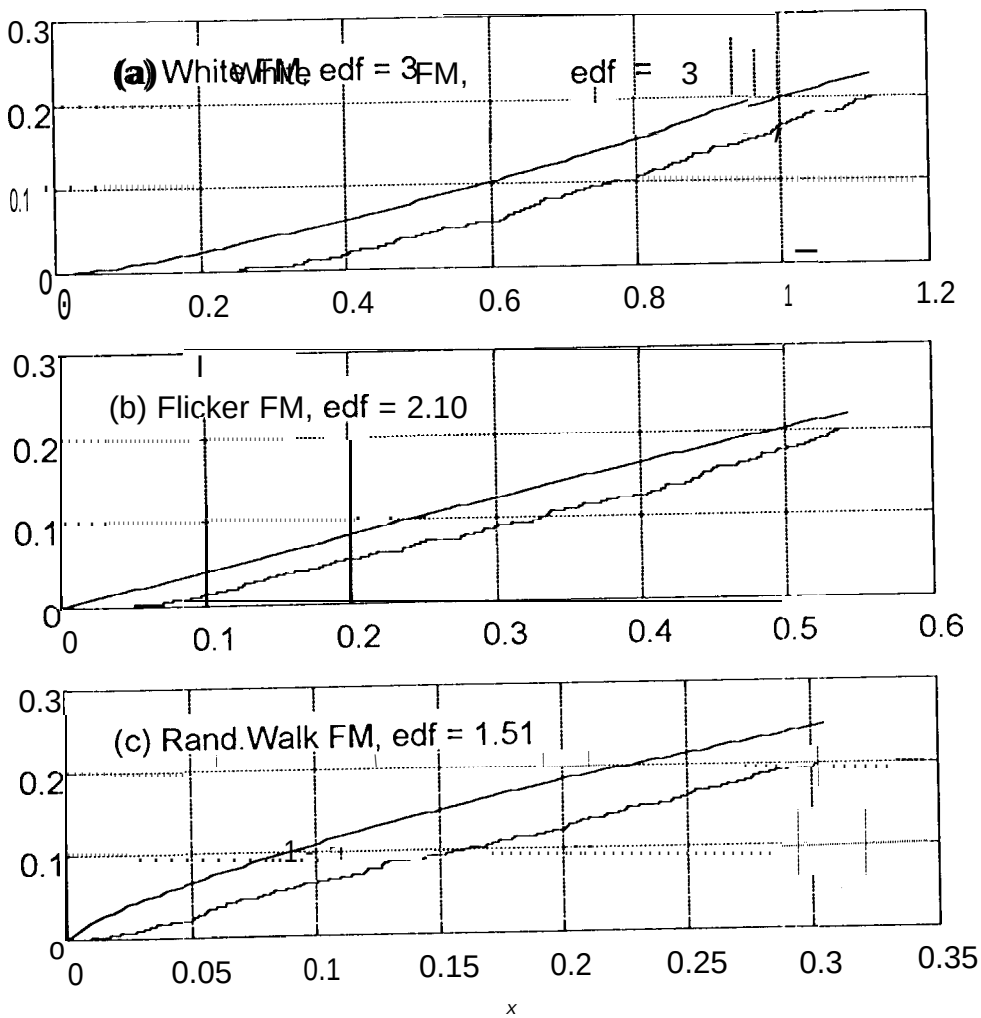
(a) White FM, edf = 3
(b) Flicker FM, edf = 2.10
(c) Rand.Walk FM, edf = 1.51
0.3
0.2
0.1
0
0.2
0.4
0.6
0.8
1
1.2
0.1
0.2
0.3
0.4
0.5
0.6
0.05
0.15
0.25
0.35
x

Fig. **2** P

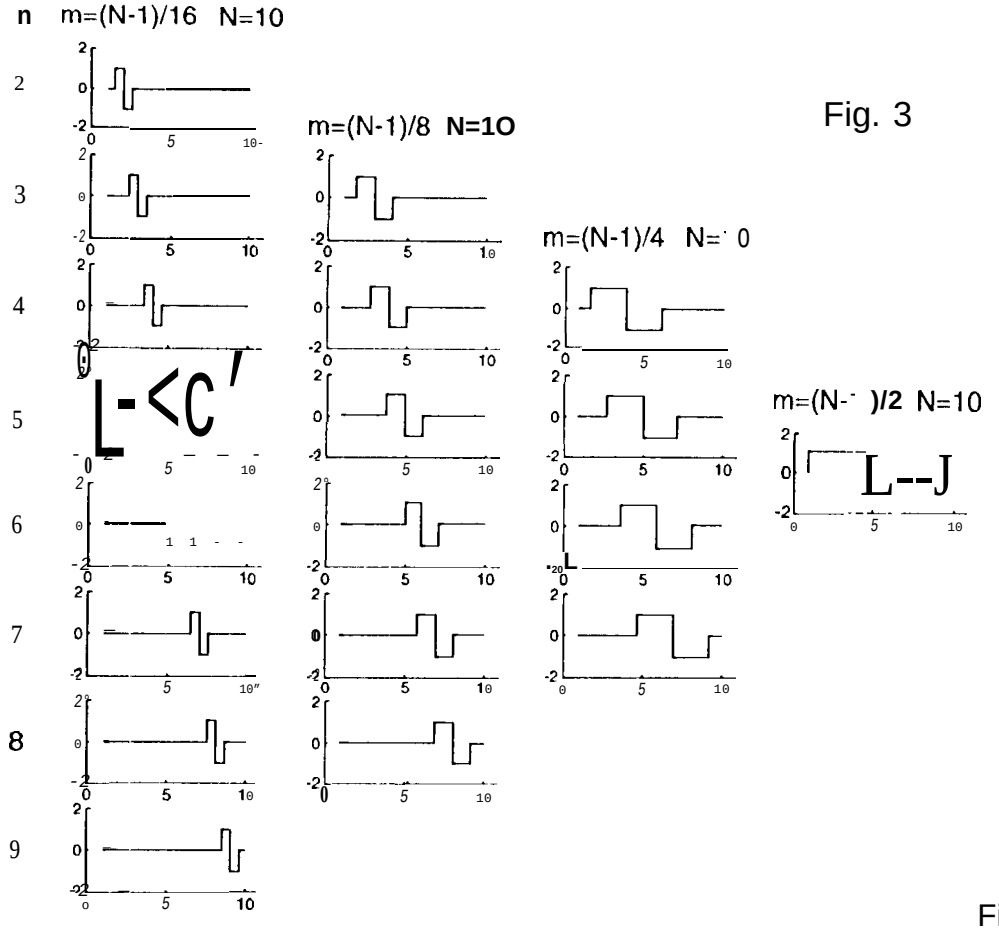
n
m=(N-1)/16 N=10
m=(N-1)/8 N=1O
m=(N-1)/4 N=10
m=(N-1)/2 N=10
2
3
4
5
6
7
8
9

Fig. 3

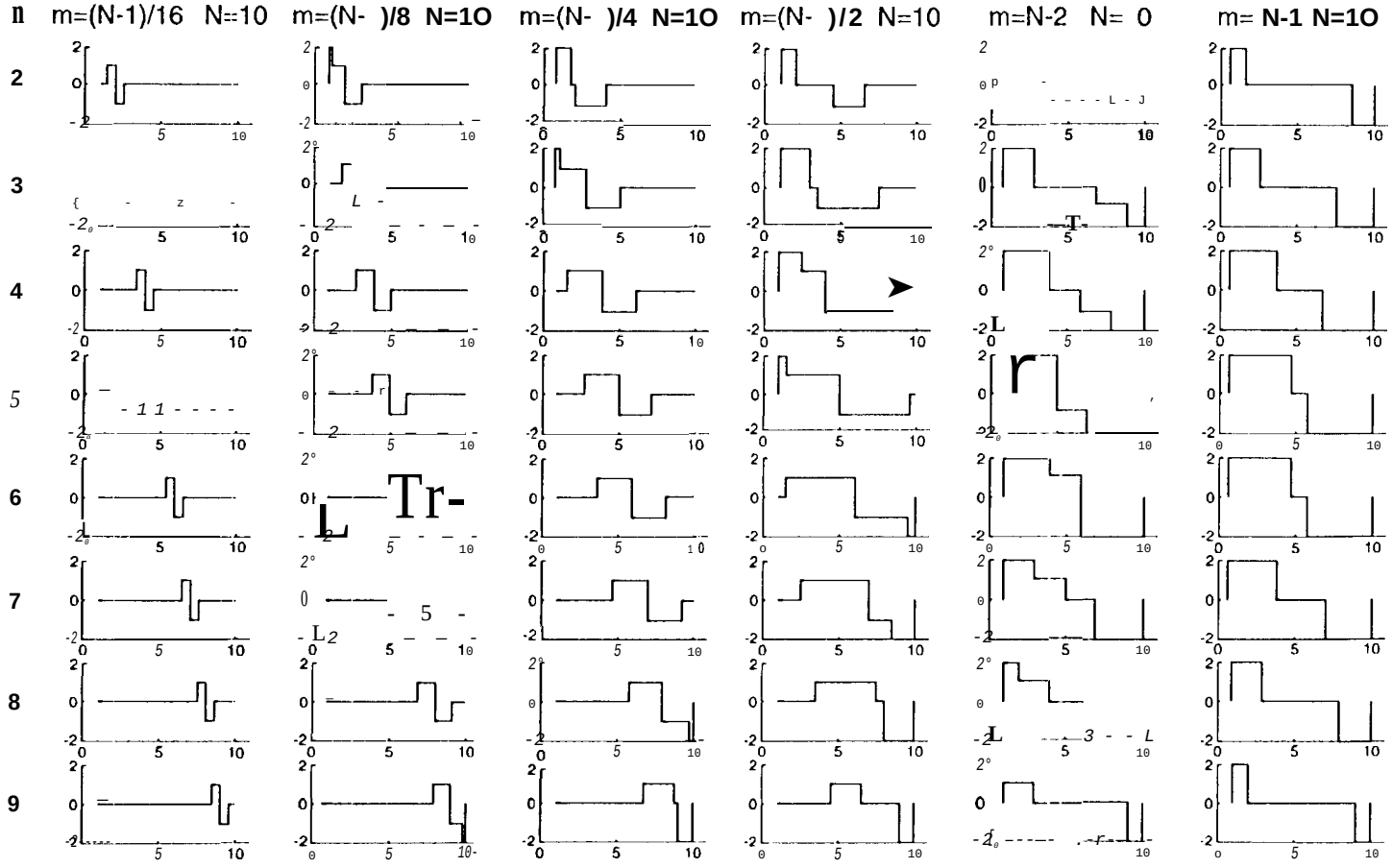
n
m=(N-1)/16 N=10
m=(N-1)/8 N=1O
m=(N-1)/4 N=1O
m=(N-1)/2 N=10
m=N-2 N=10
m= N-1 N=1O
2
3
4
5
6
7
8
9

Fig. 4

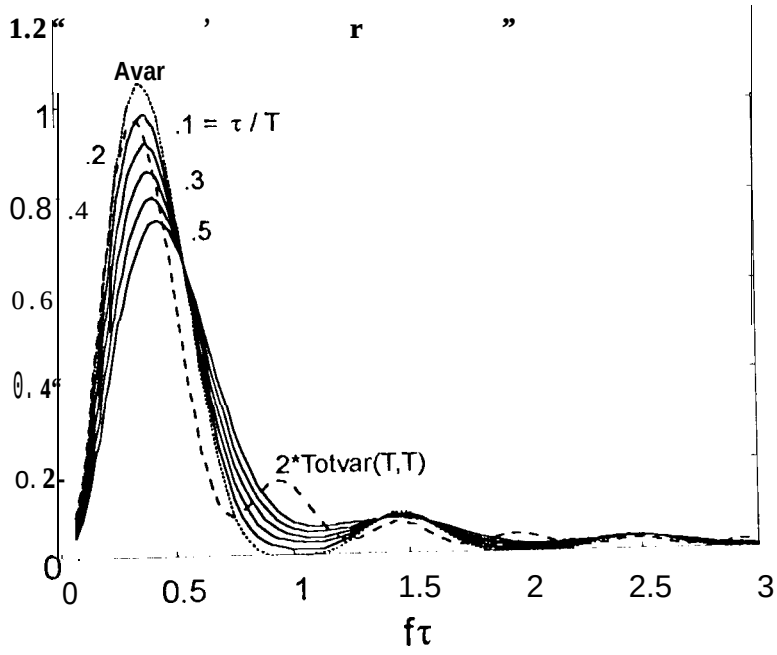

Fig. 5