THE GALILEO SPACECRAFT ARCHITECTURE

W. J. O'NEIL
Jet Propulsion Laboratory, California Institute of Technology, Pasadena, Californ io, USA

1. Introduction

This paper provides an overview of the architecture of the Galileo spacecraft. The mission overview is provided in ()'Neil (1997), and early results of this truly historic mission arc given in papers throughout this volume. The Galileo Spacecraft was comprised of a Jupiter Atmospheric Entry Probe and a Jupiter Orbiter. The mission was created to make the first ever *in-situ* measurements of the atmosphere of Jupiter below the veiling cloud layers that prevent measuring the constituents remotely, and to make long-term observations in the Jupiter system, including particularly close encounters with the Galilean satellites. The Probe would be delivered to Jupiter by the first Jupiter Orbiter. The Orbiter would release the Probe on a ballistic trajectory to its entry corridor al bout five months before arrival. The five-month solo flight time was dictated by Probe battery capacity and entry control accuracy vs. propellant required for the Orbiter deflect ion. The Orbiter was to target, the Probe with an accuracy of 4.1.6° and ± **4.5°** in entry flight, path angle and angle of attack, respectively. (Ultimately, these specifications became 1.4° and 7.0 °.) The Orbiter would precisely adjust the Spacecraft trajectory and then reorient the spin axis parallel to what would be the atmosphere-relative retry velocity vector at Jupiter and spinup to 1(1 rpm prior to release. '1'bus, the 1 'robe would be spin-stabilized for its flight, to Jupiter to control the entry angle of attack. The Probe itself would require no attitude or flight path control system. There would be no communication link with the Probe after release until the atmospheric descent. The Orbiter would deflect itself several days after release to target to the required Probe overflight and initial conditions for its Jupiter Orbit Insertion (JOI) maneuver. Following entry and on the main parachute, the Probe would transmit its data at L-band over a 56 circular beamwidth for nominally 60 minutes. The Orbiter would receive the Probe signal through

a dedicated 1.1 m antenna and dedicated receivers. The Probe "relay" data would be interleaved with Orbiter data and transmitted to Earth in real-time over the Orbiter 4.8-m High-Gain Antenna (HGA) at X-band. The Orbiter would be the first dual-spin planetary spacecraft. A spin function was required for Probe delivery and for the Orbiter fields and particles observations. A three-axis, stable platform was required for Orbiter remote sensing. The dual-spin Galileo design provided superb and elegant support for all these functions.

2. The Probe

Comprehensive discussion of the Probe design is available in Vojvodich *et al.* (1983) and Givens *et al.* (1983). As seen in Figure 1, the Probe consisted of a descent module encapsulated in a heat shield. Jupiter entry speed is

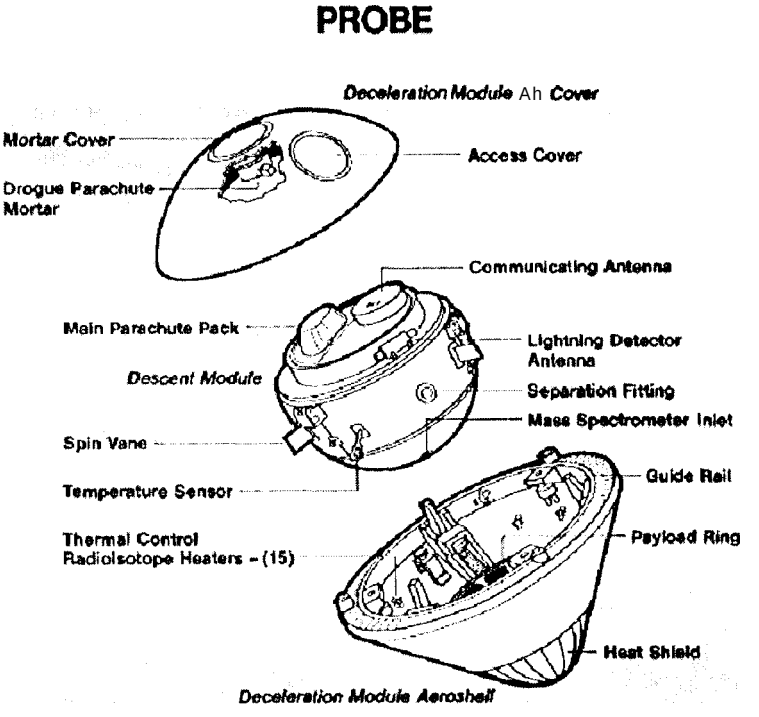

Figure 1. Galileo Probe

by far the highest planetary entry speed in the solar system. The final design requirement was for 47.8 km/sec and 350 g's. The Probe was designed

and built by Hughes Space and Communications Company under contract to NASA's Ames Research Center. The entry system was built by General Electric under contract to Hughes. Gas temperatures in front of the Probe would reach 25,000° F. The heat shield design is illustrated in Figure 2. Ablation detectors were built into the forebody at key points. Figure 3 shows that ablation near the nose was considerably less than expected, whereas very little protection was left along the conical section. It is estimated that 82 kg of the 152 kg heat shield was ablated. Probe temperature control during the interplanetary phase was provided by blanketing as shown in Figure 4, 1-W Radio-isotope Heater Units (RHUs), and Orbiter heat.

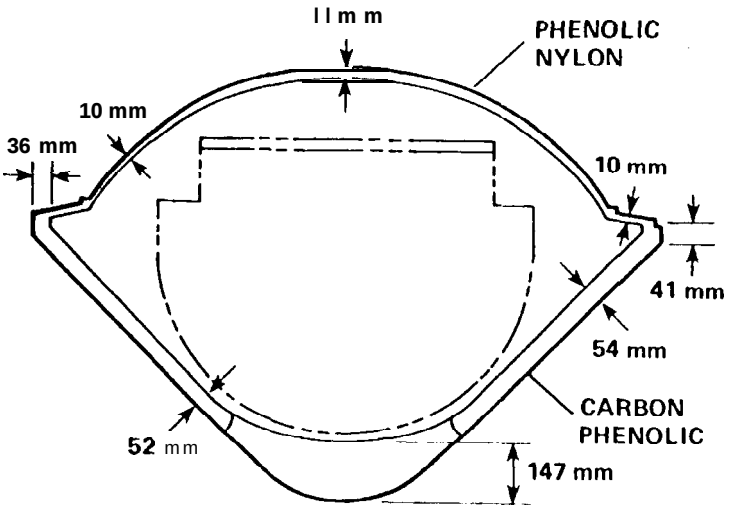

Figure 2. Heat shield design

Note in Figure 1 that the Deceleration Module aft cover contained a drogue parachute and mortar that pulled the aft cover off and deployed the main parachute as illustrated in Figure 5 These events occurred in a matter of seconds, as indicated in Figure 6, concluding with the release of the heat shield. The Probe onboard computer sequenced these events. Initiation was based on signals from "quad"-redundant accelerometers. One accelerometer provided low set and reset signals; another provided high set and reset signals. Only one of the four signals was required to initiate the deploy sequence, albeit suboptimally. Nominally the timing of all four signals was used in the sequence logic to deploy the parachute at the best time based on the "sensed" atmospheric density implied by the timing of the accelerometer low/high set/resets. Apparently due to cross-wiring of the accelerometers,

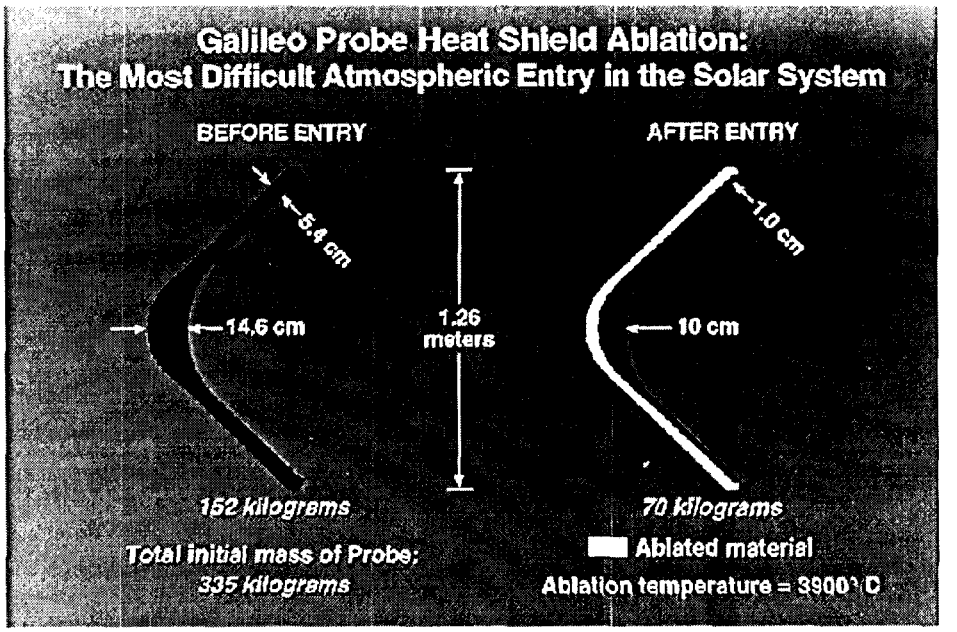

Figure **3.** Galileo Probe heat shield ablation.

the deployment was 53 seconds late, which resulted in loss of the highest altitude (0.1 to 0.3 bar) measurements but had no other adverse effects. The deceleration profile measured by the Atmospheric Structure Investigation accelerometers is shown in Figure 7 with the deployment accelerometers set,/msct, points indicated.

The Probe Descent Module carried seven scientific instruments, as illustrated in Figure 8: the Neutral Mass Spectrometer, Nephelometer (cloud particle measurements), Net Flux Radiometer, and Atmospheric Structure Instrument from the United States, and the Lightning and Radio Emissions Detector, Energetic Particle Instrument, and Helium Abundance Detector from Germany. All the instruments provided excellent data.

The packaging of the instruments and engineering subsystems within the Descent Module is shown in Figure 9. Electrical power was provided by lithium sulfur dioxide ($LiSO_2$) batteries that were not rechargeable once manufactured; i.e., the Orbiter could not recharge the Probe batteries. Power for Probe and instruments checkouts inflight was supplied by the Orbiter. The Probe main batteries powered the coast timer and entry g-switches from just before release. The coast timer was set via Orbiter command to time out six hours before entry. This initiated turn-on of minimum Probe equipment and LRD/EPIand AS1 to ~K:l'for'in pre-entry and entry

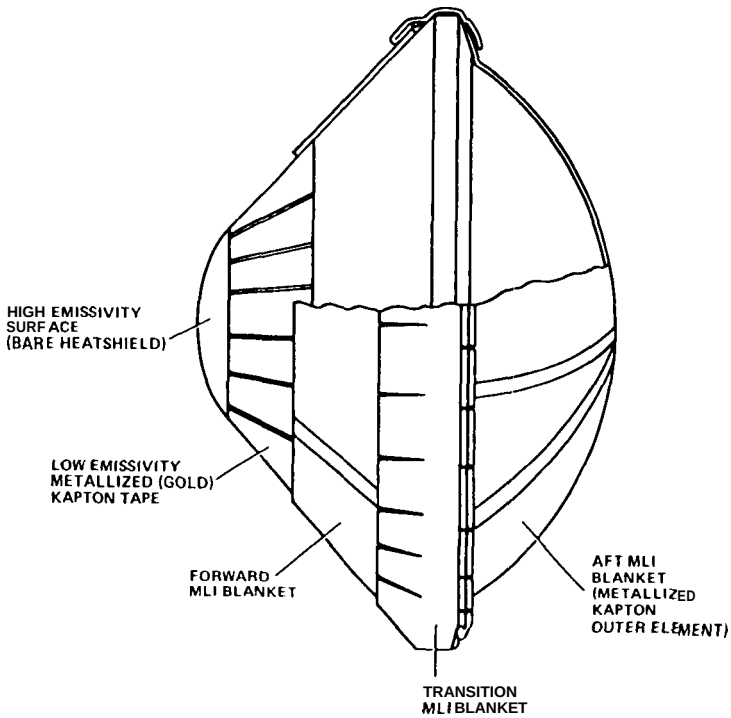

Figure 4. Deceleration module thermal blanket design

science beginning three hours out. It is emphasized that the timer had nothing to do with initiating the deployment and descent sequences. The main batteries powered all functions except the pyro devices for staging following entry; these were powered by dedicated thermal batteries.

As illustrated in Figure 10, the Probe was dual string in data and command handling, including two separate RF signals to the Orbiter Relay Receiving Antenna tilt'ougll to two Orbiter-mounted Probe Receivers. Although not entirely redundant, the most important data were available on either string. If one string was found to be faulted during an inflight checkout, it was possible to disable that, string via Orbiter command before release. T] ıe Probe also had a %lf-test" to disable a clearly faulted string at entry. No such contingencies occurred; everything was normal. Probe and instrument sequencing was almost entirely in "firmware." By design, there was very little pre-release commanding possible.

At 57.6 minutes after start of transmission, the Probe signal was lost. The end of the Probe mission was caused by overheating of the Probe transmitters. Indeed all Probe equipment exceeded qualification limits near the

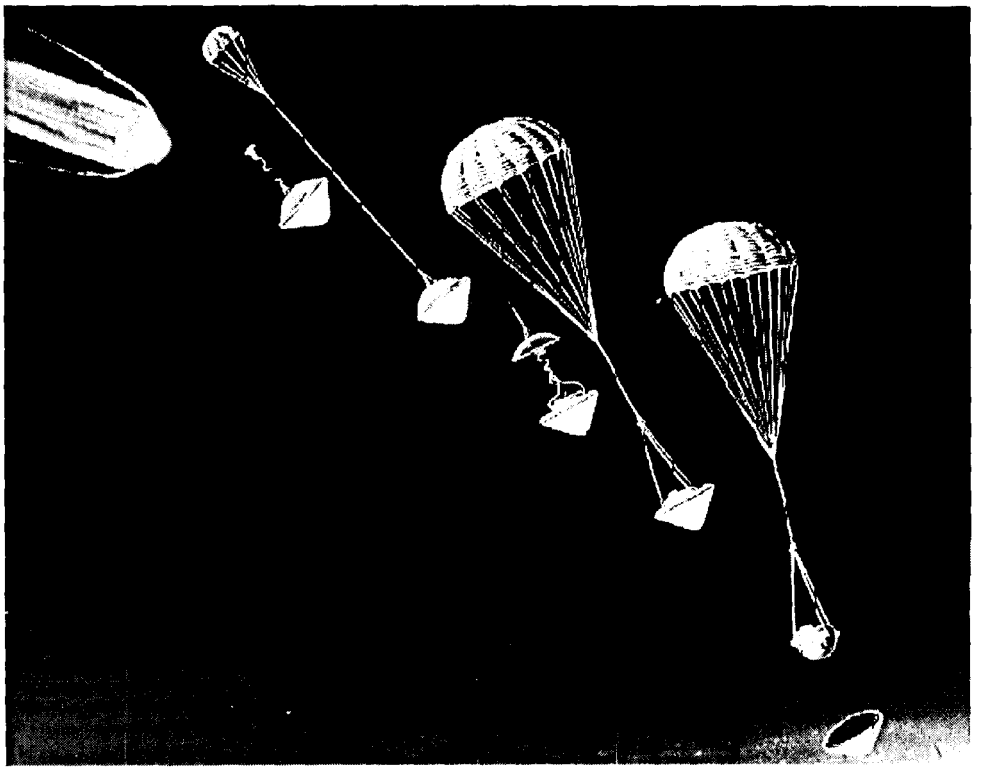

Figure 5. Galileo Probe descent.

end of mission, as indicated in Figure 11. The Descent Module was vented toward the rear, and temperatures were highest there. The cavity tracked the outside temperature much faster than the design intended. Perhaps a torn thermal blanket allowed the atmosphere to enter the cavity more rapidly. The telemetered Probe transmitters' power output is shown in Figure 12. It is seen that Transmitter B failed about ten minutes before Transmitter A.

At loss of signal, the Probe was at 23 bar pressure depth more than twice the mission requirement of 10 bars. At 10 bars the equipment temperatures were close to the qualification limit of 50° C. Presently ongoing recalibration of spare instruments in the principal investigators' labs for the elevated temperatures promises to provide good data for the very deepest measurements. Regardless of the recalibration, the Galileo Probe Mission was a tremendous success, providing excellent data from all instruments well beyond the 10 bar requirement. Figure 13 depicts the entry and descent events.

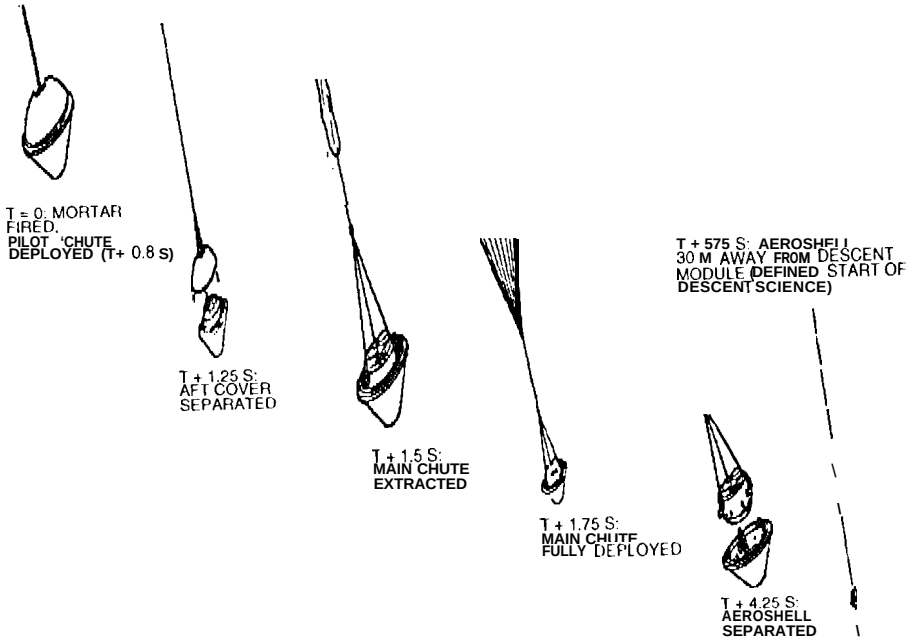

Figure 6. Parachute deployment.

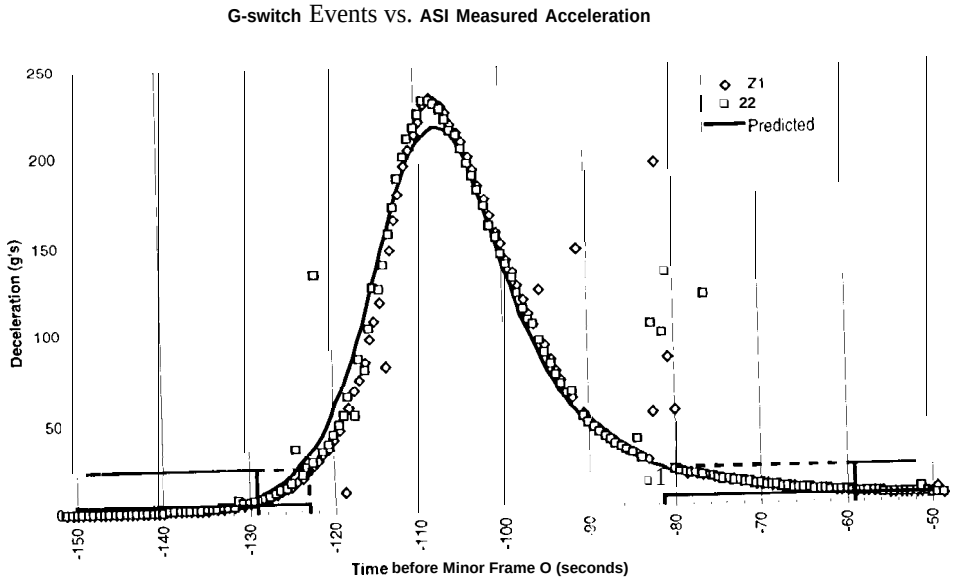

Figure 7. Deceleration

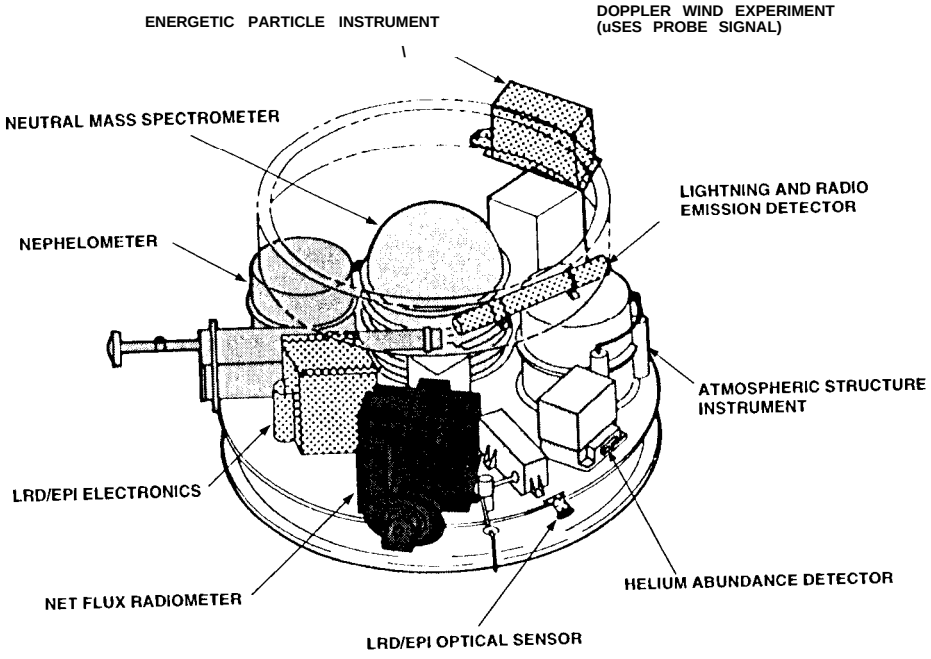

Figure 8. Probe instruments.

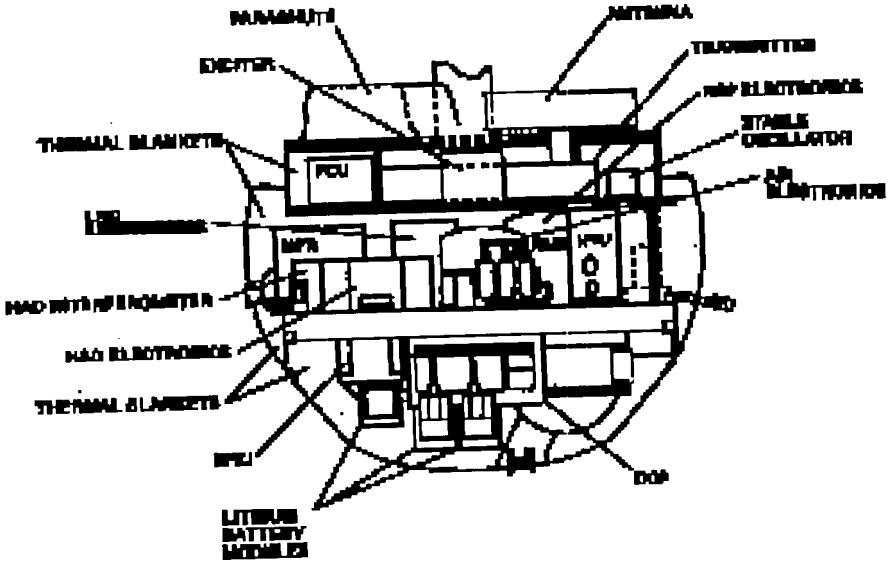

Figure 9. Descent module internal arrangement.

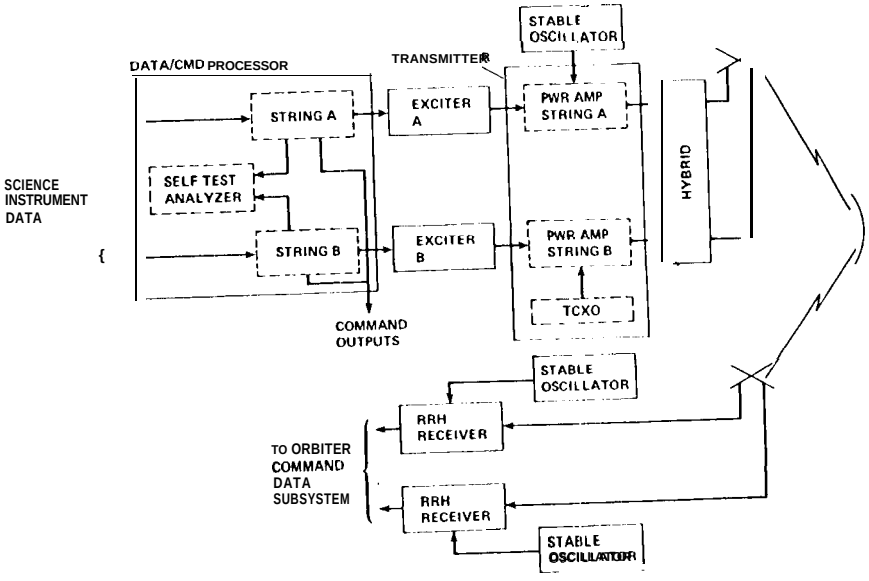

Figure 10. Telemetry and command redundancy scheme.

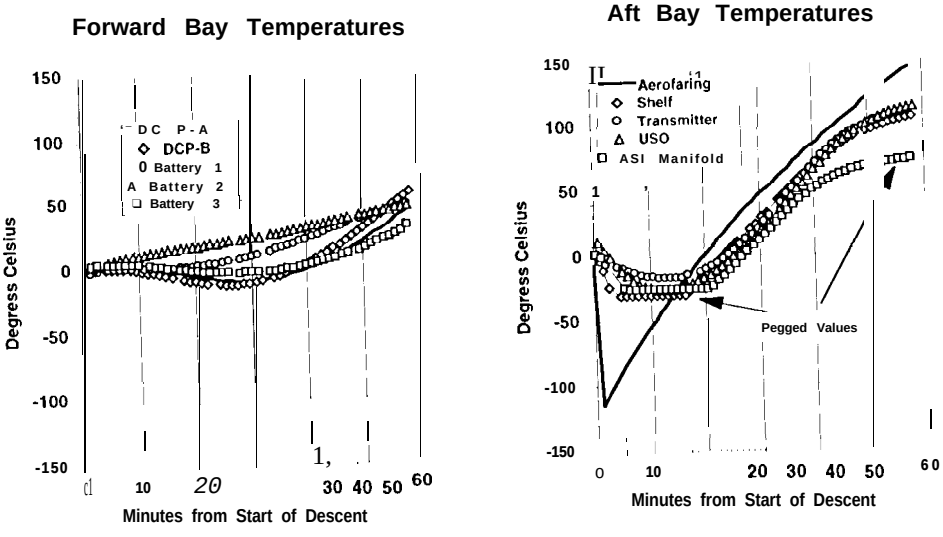

Figure 11. Probetemperature.

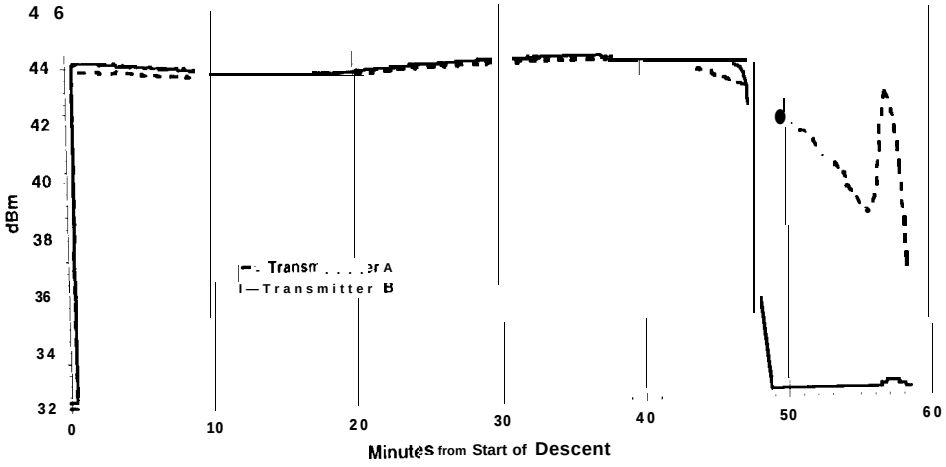

Figure 12. Transmitted power

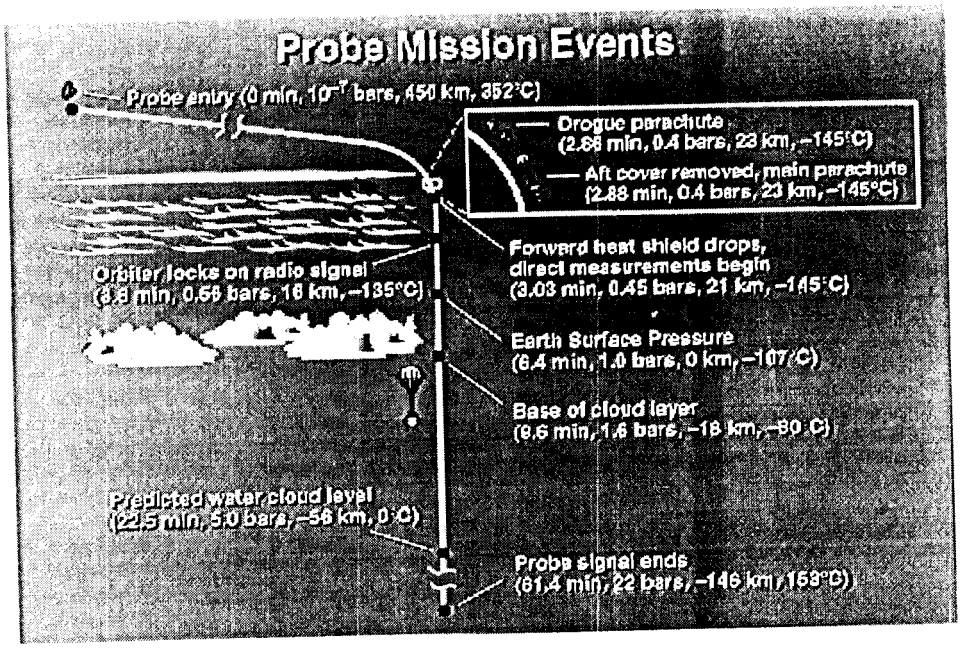

Figure 13. Probe mission events

Color Figures O'Neil-14 and O'Neil-15, shows the Descent Module being prepared for encapsulation at Kennedy Space Center and the complete Deceleration Module in flight configuration.

3. The Orbiter

The Galileo Orbiter is the first and only dual-spin planetary spacecraft. It is the most sophisticated and capable planetary spacecraft ever flown. Color Figure O-Neil-1 6 shows the Orbiter during an early assembly in the JPL Spacecraft Assembly Facility (SAF). The extent of the Magnetometer Boom can be appreciated in this view. Also, color Figure O 'Neil-l 7 shows the completed Orbiter in the KSC Vertical Processing Facility (VPF) being lifted for mating to the Upper Stage.

Figure 18 illustrates the spun and de-spun sections. The bottom section (gray) is de-spun. The Spin Bearing Assembly (SBA) on the centerline provides the dual-spin function. Electric motors in the SBA drive the lower section at the same rate as the upper section is spinning, but in the opposite direction. The result is that the lower section remains 3-axis stable while the upper section spins, typically at 3.15 rpm. In "cruise mode," the AACS uses optical encoders between the sections to determine the motor current to maintain the constant roll attitude of the de-spun section. In the high pointing accuracy "inertial mode," a pair of two-axis gyros at right angles on the scan platform are used by AACS to control the SBA and the orthogonal platform elevation axis controller to hold the platform inertially fixed and allow the rest of the spacecraft to "wobble" with respect to the platform as dynamic disturbances occur. Point-to-point slewing is accomplished with high accuracy in this mode. This is particularly important for mosaicing and for providing the second spatial dimension "push-broom" style for the Near-lllframcl Mapping Spectrometer (NIMS).

The SBA uses rotary transformers for command and data across the spinning interface. Slip rings and brushes are used for power and status/fault signals for the Command and Data Subsystem (CDS). The CDS has modules on both sections.

An '(all-spin" mode was required for a few functions such as Probe Release and 400 N main engine burns. In all-spin, the AACS maintains the lower section spinning at the same rate as the upper by limiting the relative displacement of the sections as seen via the encoders. All-spin is maintained by an active control loop; there is no locking mechanism between the sections.

The dual-spin attitude control of Galileo has been superb, as particularly evidenced by visible and infrared images and the Probe delivery and data return. The Probe Relay Receiving antenna was mounted on the de-

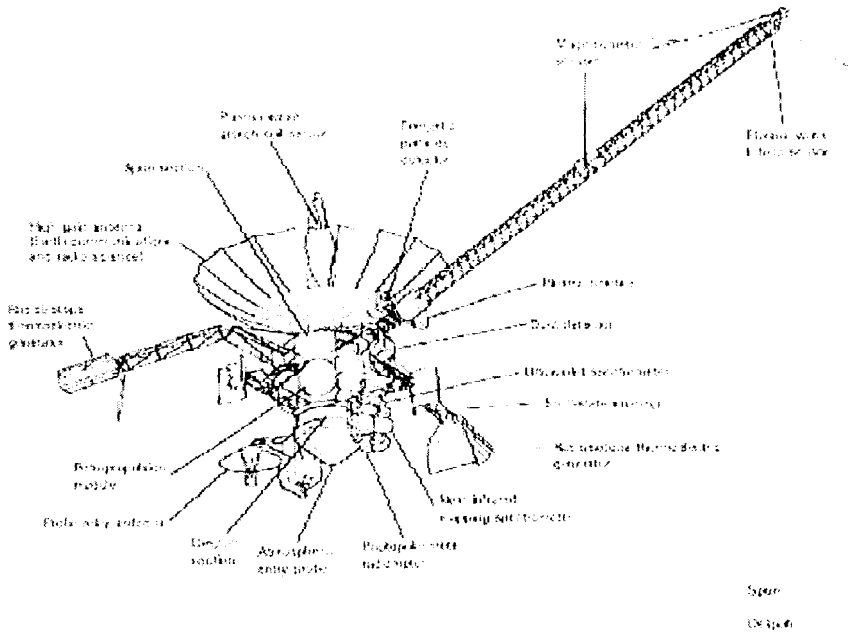

Figure 18. Spun aud despun section of Galileo spacecraft.

spun section with an elevation axis that was stepped four times to "track" the Probe in cone (elevation) angle while clock (azimuth) angle was AACS controlled in inertial mode. Two successive AACS contingency modes were programmed to autonomously take over to maintain azimuth pointing in the event of a gyro failure during relay, but no failure occurred.

From early 1 991 to late 1993, nine unnecessary spacecraft safings occurred due to a combination of SBA brush debris 10W-1CVC1 (i loo" ma) shorts and brush bounce that erroneously indicated a CDS fault. This has not occurred since 1993, apparently because of fortuitous '(wear-ill.')

The A ACS uses a star scanner for celestial reference. Typically, t hree stars are loaded in the star map, but as few as two or as many as six can be used. The elevation and timing of star sightings are used to derive spacecraft attitude. When stars are available in inertial mode, the celestially derived attitude! is periodically used to update the gyros.

Figure 19 shows the instruments and other salient equipment on the Orbiter. Note. that the Probe was carried in the idly of the Orbiter and that the scan platform and relay antenna are mounted on opposite sides of the de-spun section. Above the de-spun interface, moving upward, is the Rocket Propulsion Module (l{ I'M), the electronics bus with booms attached, and

the HGA. The RPM was provided free of charge to NASA by the Federal Republic of Germany as the most major contribution of their partnership in Project Galileo. It was designed and built by Messerschmitt-Bölkow Blohm (now DASA) under contract to the German Space Agency (DARA). It is a bi-propellant (MMH and NTO) pressure-fed, hypergolic system with six 10 N thrusters in a cluster at the end of each of the short symmetrical booms. Two separate plumbing branches exclusively feed three thrusters in each cluster. Either branch with its six thrusters can provide all required attitude control torques and propulsive delta-V in the event of a problem with the other branch. One branch is better for torque and the other better for lateral delta-V, and this has been the mode throughout the flight, since no problems dictated otherwise. Landano (1997) and Killinger (1997) give further details. The key exception to the above is that a 400 N engine on the centerline was absolutely required to perform the J01; it was also used for the Orbiter Deflection Maneuver following Probe Release and for the Perijove Raise Maneuver at the first apojove since the higher Isp of the 400 N engine saved considerable propellant. The RPM performance has been excellent throughout the mission. Indications of potential problems with the pressurization check valves required special system temperature and pressure management to minimize risk of propellant mingling in the pressurization lines. Figure 20 shows the RPM at MIBB (IDASA); note the thruster orientations on the cluster and the 400 N nozzle on the centerline.

Immediately above the RPM is the electronics bus housing most of the engineering subsystems, including the CDS, AACS, the tape recorder, radio equipment, etc. (Parts of the CDS and AACS and the relay radio equipment are in the despun electronics box opposite the scan platform.) Attached to the electronics bus are the two RTG booms and the science boom with its extension, the magnetometer boom. The two Radioisotope Thermoelectric Generators (RTGs) in combination presently output about 480 W; that nominally leaves about 40 W of power margin, which is hardwire shunted to the propellant tank heaters. The tip of the magnetometer boom is 11.0111 from the centerline, providing excellent sensing position for the outboard MAG sensor. All three booms must be properly deployed for spacecraft balance; otherwise a stable spin would not be possible. In fact, the RTG Booms are occasionally rotated around their hinge points with linear boom actuators to dynamically re-balance the spacecraft as mass is expended; i.e., Probe Release and propellant expenditure. This keeps the (spin) principal moment of inertia axis aligned with the centerline, effectively eliminating spacecraft wobble.

The Orbiter carries eleven science instruments. Six fields and particles instruments are mounted on the spinning side: Magnetometer (MAG),

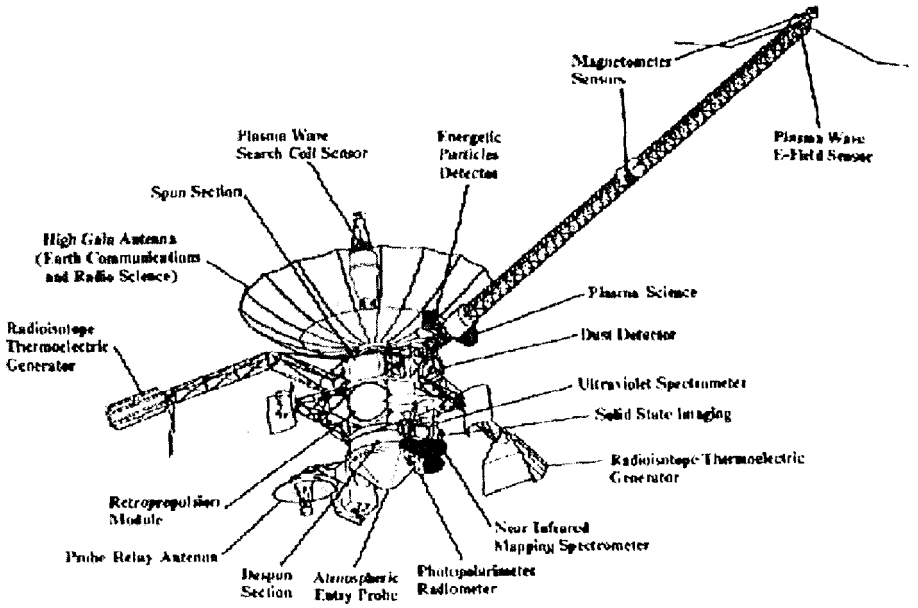

Figure 19. Galileo spacecraft

Plasma Wave (PWS), Plasma (PLS), Heavy-Ion Counter (111[;), Energetic Particle Detector (EPD), and Dust Detector (DDS). DDS and half of the EPD were provided by Germany (DAR A). Note that three of the six are mounted on the science boom, which also carries the 0.67 m canister from which the magnetometer boom deployed. Four remote sensing instruments-the Solid State Imaging (SS1), the Near-Infrared Mapping Spectrometer (NIMS), the Photopolarimeter Radiometer (PPRi), and Ultraviolet Spectrometer (UVS)-are mounted on the scan platform. A fifth remote sensor, the Extreme Ultraviolet Spectrometer, is mounted on the spinning side and used in a spin scan mode.

Above the electronics bus is the HGA, which did not deploy for reasons discussed in O'Neil (1991). All communications are via the Low-Gain (broad-beam) S-band antenna at the top of the HGA mast.

The spacecraft mass summary is given in Table 1. Propellant utilization is shown in Table 2 (mainly provided by L. A. D'Amario).

Figure 21 is a simplified block diagram of the Orbiter taken from Landano and Joins (1983). All receive and transmit S-band via the LGA, which has replaced the "SXA" (S-X Band Antenna) (also known as HGA), as the primary antenna. The Orbiter carries only S-band receivers. The X-S "Receiver" downconverter was added late in the design to provide an X-band

TABLE 1. Spacecraft mass

Component		Mass (kg)
Spacecraft to IUS Adapter		155
Orbiter Burnout Mass		1298
Orbiter Engineering	936	
Orbiter Science	118	
RPM Burnout Mass	216	
Probe Relay Antenna/Probe Adapter	28	
Usable Propellant		925
Atmospheric Probe		339
Total Launch Mass		2717

TABLE 2. Galileo propellant utilization summary, epoch: post-C3 (OTM-14, 11/10/96

Epoch: Post-G7 (OTM-24, 4/8/97)

	ΔV (m/s)	ΔM (kg)
Interplanetary ΔV	132.0	127.7
Interplanetary Attitude/Sl)ill Control		30.0
Interplanetary RPM Line Flushing		5.9
HGA Anomaly Activities		51.3
ODM	61.5	40.6
JOI	645.2	379.8
PJR	377.2	185.9
Tour ΔV[1,2]	80.9	41.5
Tour Attitude/S1)it~ Control[1]		13.0
Tour RI›M Line Flushing		1.8
Tour Science Turns[3]		9.0
Project Manager Reserves		13.0
Propellant Margin[1]		24.6
'rotal	1296.8	925.0

[1] Corresponds to 90% probability estimate.

[2] Includes 19.6 m/s of ΔV (10.3 kg of propellant) already expended.

[3] Corresponds to 20 kg of balanced turns.

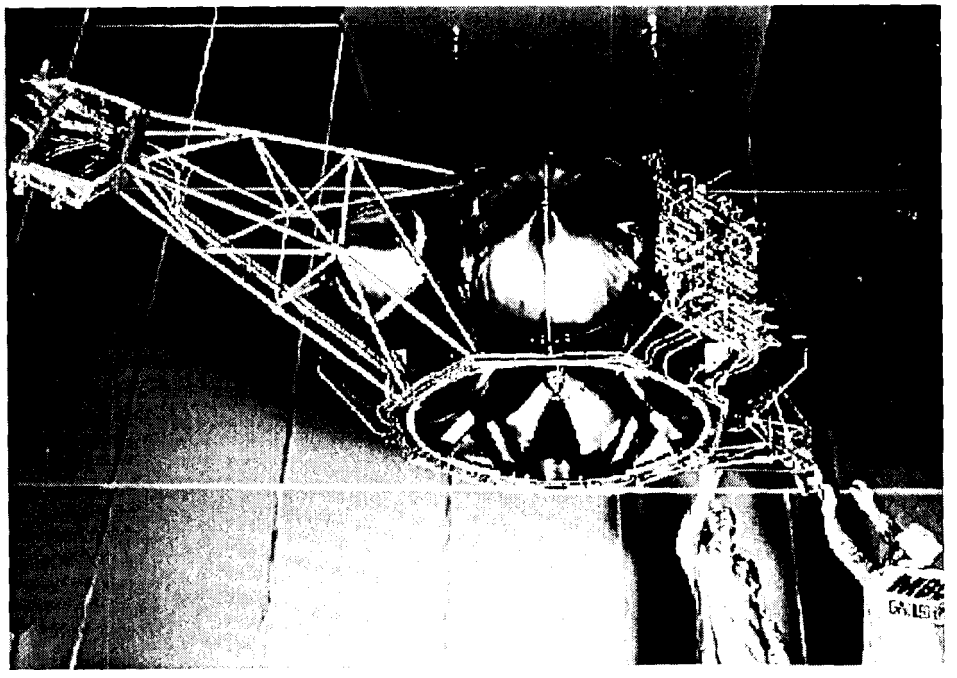

Figure 20. Galileo RPM

uplink for Radio Science; it is now superfluous without the HGA. The Radio Frequency Subsystem (RFS) interfaces with the telemetry/command Modulation/Demodulation Subsystem (MDS) that in turn interfaces with the Command and Data Subsystem (CDS). Galileo is the first planetary spacecraft designed with a distributed data system wherein most engineering subsystems and all science instruments interface with the CDS over dedicated command and reply lines and virtually all have microprocessors and their own memories. The CDS interface with the AACS is the most critical and is performed entirely on the spun side. Both CDS and AACS communicate with their de-spun elements independently of each other over the SBA, as indicated in the diagram. ACE and DEUCE refer to the spun and de-spun Attitude Control Electronics, respectively. Note that the AACS exclusively controls the RTM based on sequence instructions received from CDS. The CDS operates the DMS (Data Memory Subsystem); i.e., the tape recorder, as the only bulk (900 mb) data storage device on the spacecraft. STS refers to the interface with the Space Transportation System; i.e., the Shuttle launch vehicle.

Figure 22 is a simplified functional block diagram of the AACS, also obtained from Landano and Jones (1983). Most of the elements have already

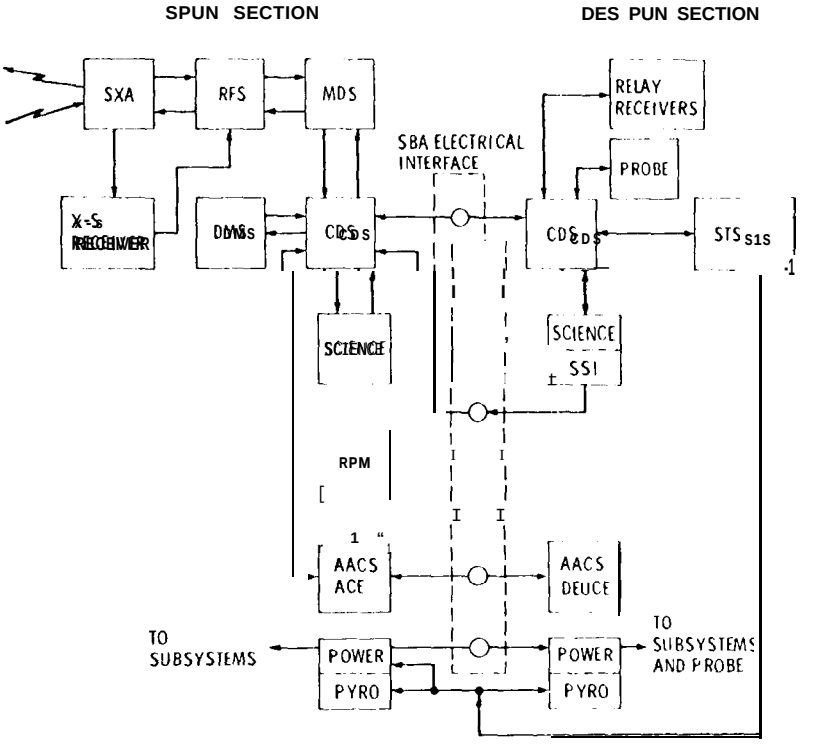

Figure 21. Orbiter simplified block diagram

been mentioned. The two accelerometers were used only for 400 N engine 1)11111 cutoffs; they were not redundant, but averaged. Timed backups were used to mitigate against anomalous under/overburns none occurred.

With very few exceptions, all critical engineering elements on the Orbiter were either block or functionally redundant. At this writing, no redundancy has been invoked.

The HGA functionality could not be protected with redundancy. The HGA deployment failure required a massive workaround to recover the Orbiter Mission using the LGA with a 10,000 times (40 db) weaker received signal at Earth. The HGA was to provide data rates up to 134,000 bps. The LGA could provide at lint, only 10 bps from Jupiter to Earth at maximum range (conjunction). By implementing new state:-c)f-tilt!-att software receivers under development at the time of the failure, additional downlink encoding, and arraying the 70 m antennas at Goldstone, California, and Canberra, Australia, during viewing overlaps, along with the 64 m Aus-

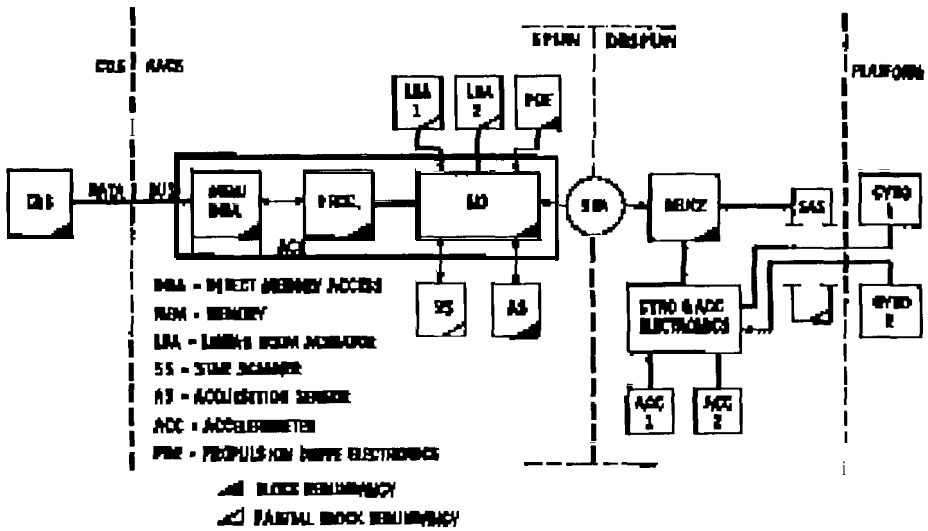

Figure 22. AACS simplified functional block diagram.

tralian Radio Astronomy Antenna at Parkes and two 34 m antennas at Canberra, the DSN was able to increase the LGA rate to 160 bps at best conditions. On average these improvements yield about one order of magnitude increase in data rate. The Project massively reprogrammed the CDS, part of the AACS, and virtually all instruments to do extensive editing and compression onboard to reduce the bit rate required to return information by another order of magnitude. 'Thus, the LGA information rate was increased by two orders of magnitude to effectively one kilobit per second. The tape recorder is an essential element in this recovery. All imaging and other high-rate data must be recorded to tape. The operating scenario is illustrated in Figure 23. During the seven-day encounter period of each orbit, images and other data are stored on the tape recorder. The encounter period encompasses Jupiter perijove and the flyby of the targeted Galilean satellite. During the cruise period of the orbit—the one to two months between the encounter periods—the tape recorder is incrementally readout in very small "gulps." As the gulp is being read, the imaging data are fed by the CDS to the AACS processor for ICT compression in "(real time" and the compressed data are returned to CDS for storage in an 80 kbyte buffer; the gulp stops when the buffer is full. Engineering data and mid-time (low rate) fields and particles data may also be filling the buffer. The buffer is being drained by the telemetry downlink. When it is nearly empty, another gulp is taken from the tape. The data equivalent of about 150 full-frame, full-resolution images can be stored on the tape. Typically not all this in-

formation can be returned from the tape between encounters, so a priority selection scheme is used to select and deselect the data to be returned and compression parameters as well. These priorities are stored in the CDS cm a weekly basis.

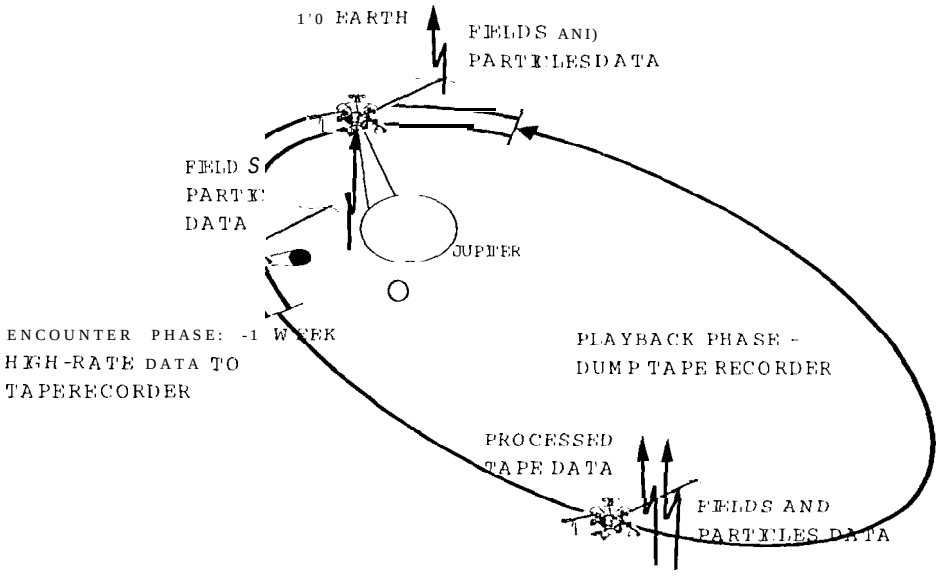

Figure 25'. Typical orbit

Originally, the single tape recorder was incorporated in the Orbiter design as a backup for the Probe relay data. The stow position of the Relay Receiving Antenna (RRA) was boresighted with the spin axis so that if the spin bearing failed the Orbiter would be re-oriented for relay to point the spin axis at the Probe. Thus, the RRA would capture the Probe signal, but there could be no mal-time transmission to Earth since the HGA would be way oft Earth-point. The Probe data had to be stool on the Orbiter until after the relay when the HGA could be re-pointed to Earth.

When the HGA deployment failed, recording on the tape recorder and subsequent playback over the LGA became the primary mode for return of the Probe data. As a partial backup to this new primary mode, CDS was re-programmed to stem a majority of the Probe data. A problem occurred with the tape recorder just two months before Jupiter arrival (O'Neil *et* al., 1996, and Johnson and Levanas, 1997). The problem was adequately resolved to record all of the Probe relay data and the fields and particles data perfectly, but high-rate recording required for imaging was prohibited pending a better understanding of the problem. Ultimately, after about four

months of investigation, new tape conditioning procedures and major additions to CDS software to safely operate the recorder were identified. The CDS additions became a late augmentation to the massive reprogramming to operate without the HGA, which had been in work since early 1993. All the new software was radioed to Galileo in May 1996 just in time for the first satellite encounter. The CDS was *completely* reloaded.

The Galileo Orbiter did an essentially perfect job of delivering the Probe and returning the Probe data to Earth. The Orbiter is performing its Jupiter System Orbital Tour superbly with four of the ten encounters completed as of this Conference. The recovery of the Orbiter Mission without, the HGA is absolutely stunning. With very few exceptions, the performance of every element of the Orbiter is excellent.

Generally, Orbiter operation is controlled by a "sequence" of instructions resident in the CDS. These sequences operate Galileo for intervals of one week to one month. They are prepared in a continuous process at JPL and radioed to the spacecraft as needed. Landano (1997) describes the process.

Acknowledgements

Project Galileo represents the work of thousands of people. They all deserve acknowledgment for the really accomplishments of Galileo to date and for the tremendous promise it is now fulfilling at Jupiter.

Thanks go to Tiffany Chiu and William Hoffman for illustrations, editing, and production of this paper. Special thanks to Charlie Sobeck (ARC) for help with some Probe figures. Also, thanks to Lou D'Amario and Jennie Johannesen for help with the navigation figures and data.

The research described in this paper was carried out by the Jet Propulsion Laboratory, California Institute of Technology, under a contract with the National Aeronautics and Space Administration and by NASA's Ames Research Center.

Reference herein to any specific commercial product, process, or service by trade name, trademark, manufacturer, or otherwise, does not constitute or imply its endorsement by the United States Government or the Jet Propulsion Laboratory, California Institute of Technology.

References

Givens, J. J., Nolte, L. J., and Pochettino, L. R. (1983) AIAA-83-xxxx.

Johnson, T. V. and Levanas, G. C. (Tape Recorder Paper 1997), presented at the Three Galileos Conference.

Killinger, R. (1997) this volume.

Landano, M. R. (1997) this volume.

Landano, M. R. and Jones, C. P. (1983) AIAA-83-xxxx.

0'Neil, W. J. (1991) IAF-91-468.
0'Neil, WT. J. (1997) this volume.
[) 'Neil, W. J., Ausman, Jr. N. E., Gleason, J. A. Landano, M. R, Marr, J. C., Mitchell, R. T., Reichert, R. J. and Smith, M. A. (1996) IAF-96-Q.2.01.
Vojvodich, N. S., Drean, R. J., Schaupp, R. W., and Farless, D. L. (1983) AIAA-83-0100.