AMMOS
Generic Planetary Mission Ops

Barbara Anderson

Ground Systems Architecture Workshop

February 1997

GENERIC MOS ARCHITECTURE

- Functional breakdown common across missions
- Reuseable software systems and components
- Table adaptation for telemetry and command
- Model additions for navigation, sequence planning, constraint checking
- Concurrent design of mission and operations
- Select and integrate to support new project
  - Initial capability to support spacecraft development
  - Incremental integration of functions through I&T, launch, cruise operations, orbital operations
- Support all planetary missions; Pathfinder, Discovery, Cassini

Standards-based Systems

- UNIX-based distributed systems; multi-platform
  - Common languages and COTS tools
  - Both legacy and new software components
  - Remote locations an integral part of mission operations
  - Single software source set for all platforms
  - Vendor independent; open competitive procurements
- Re USED functional software components
- New elements inserted : new technology, new functions, project unique, COTS replacements
- Standards simplify adaptation for new mission
- Spread Cost of New Technology and Automation
- Standard architecture would enable sharing across larger user community; ease evolution
  - Common architecture, mixed components, feasible across NASA, similar DoD operations, commercial satellites

Layered Mission Operations Architecture

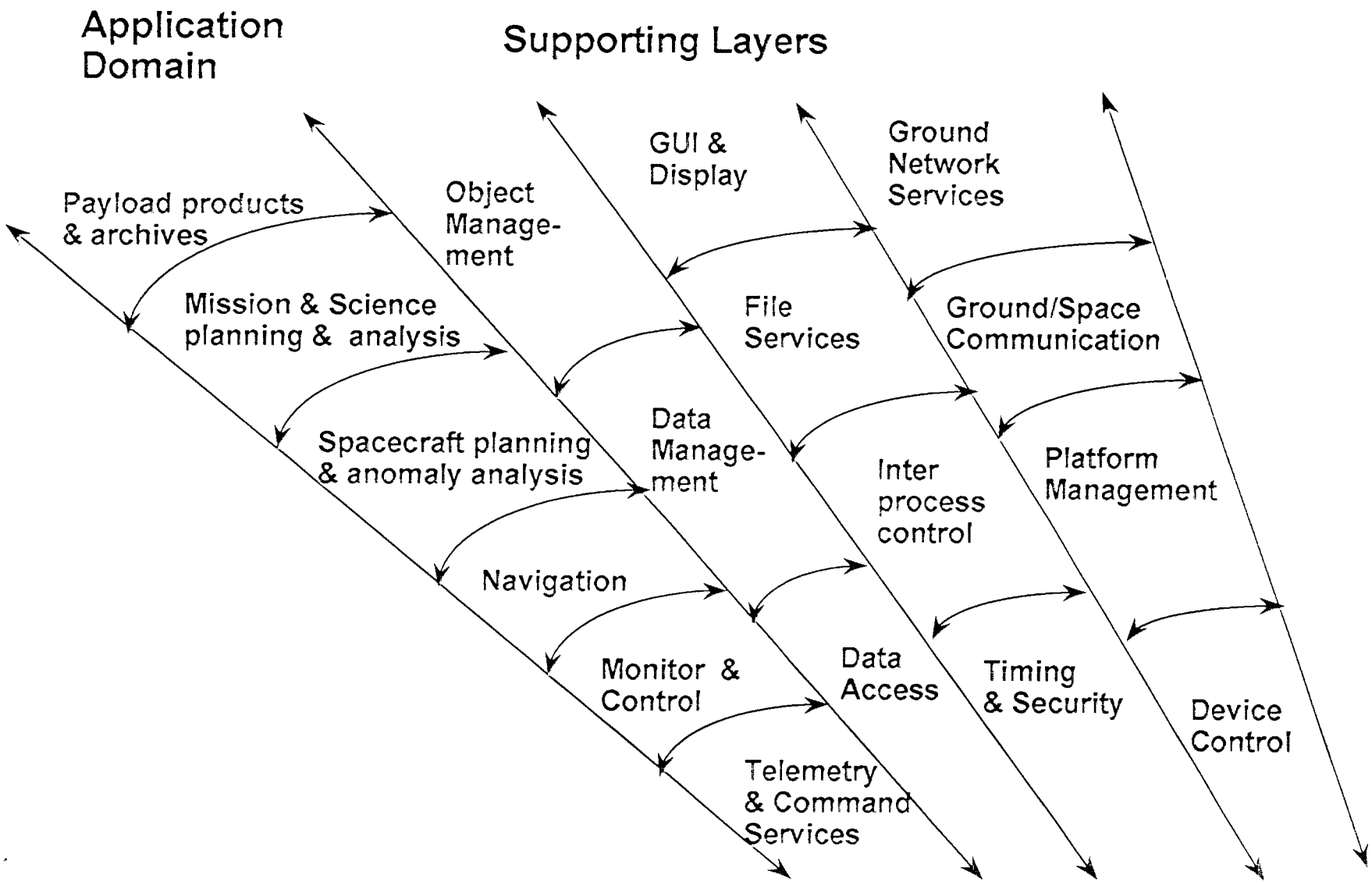

TELECOMMUNICATIONS and MISSION OPERATIONS DIRECTORATE

PLANETARY FLIGHT OPERATIONS SUPPORT

AMMOS MGDS Operations Network Diagram

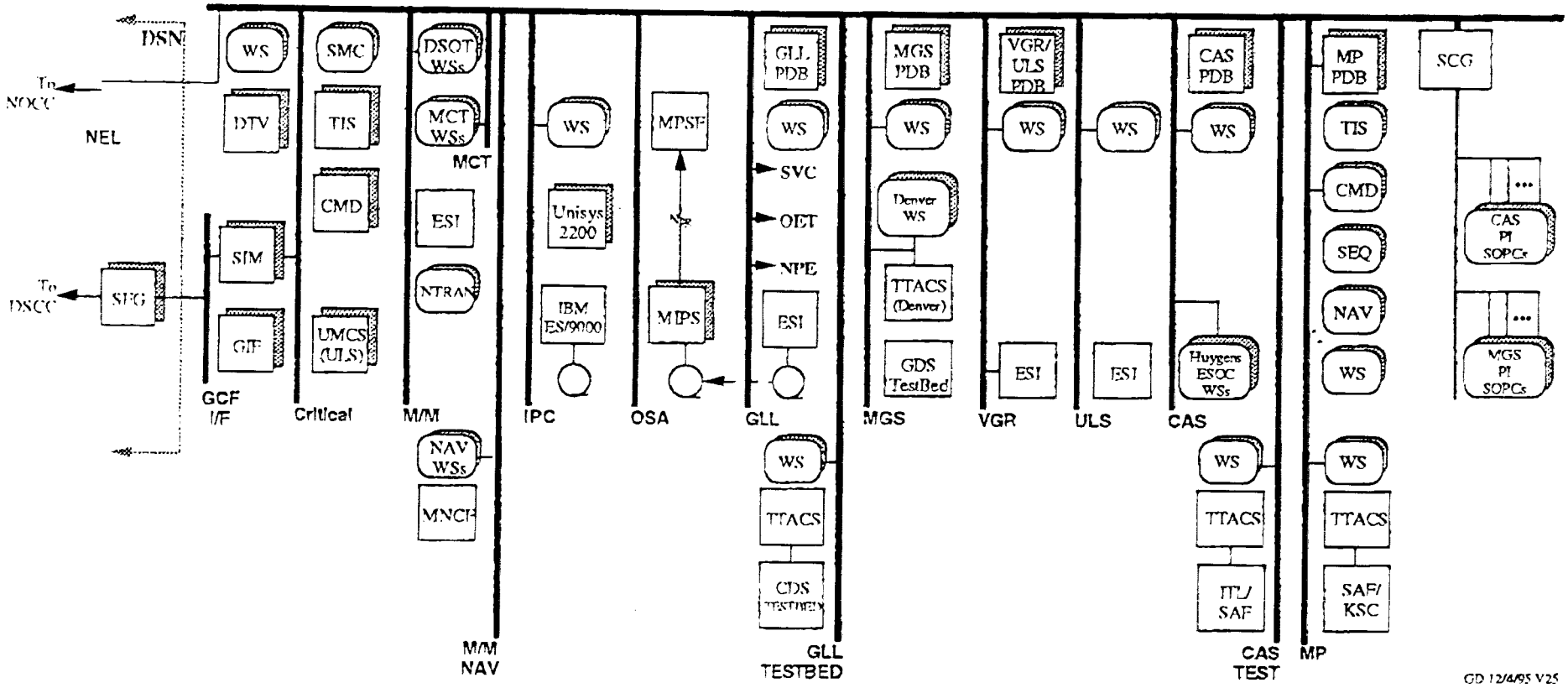

- FIVE MILLION LINES OF APPLICATION CODE
- THIRTY MILLION LINES OF COTS CODE
- MORE THAN SIX-HUNDRED WORKSTATIONS
- NODES LOCATED THROUGHOUT THE WORLD

EVOLUTION OF MULTIMISSION GROUND DATA SYSTEM (MEASURED AT LAUNCH)

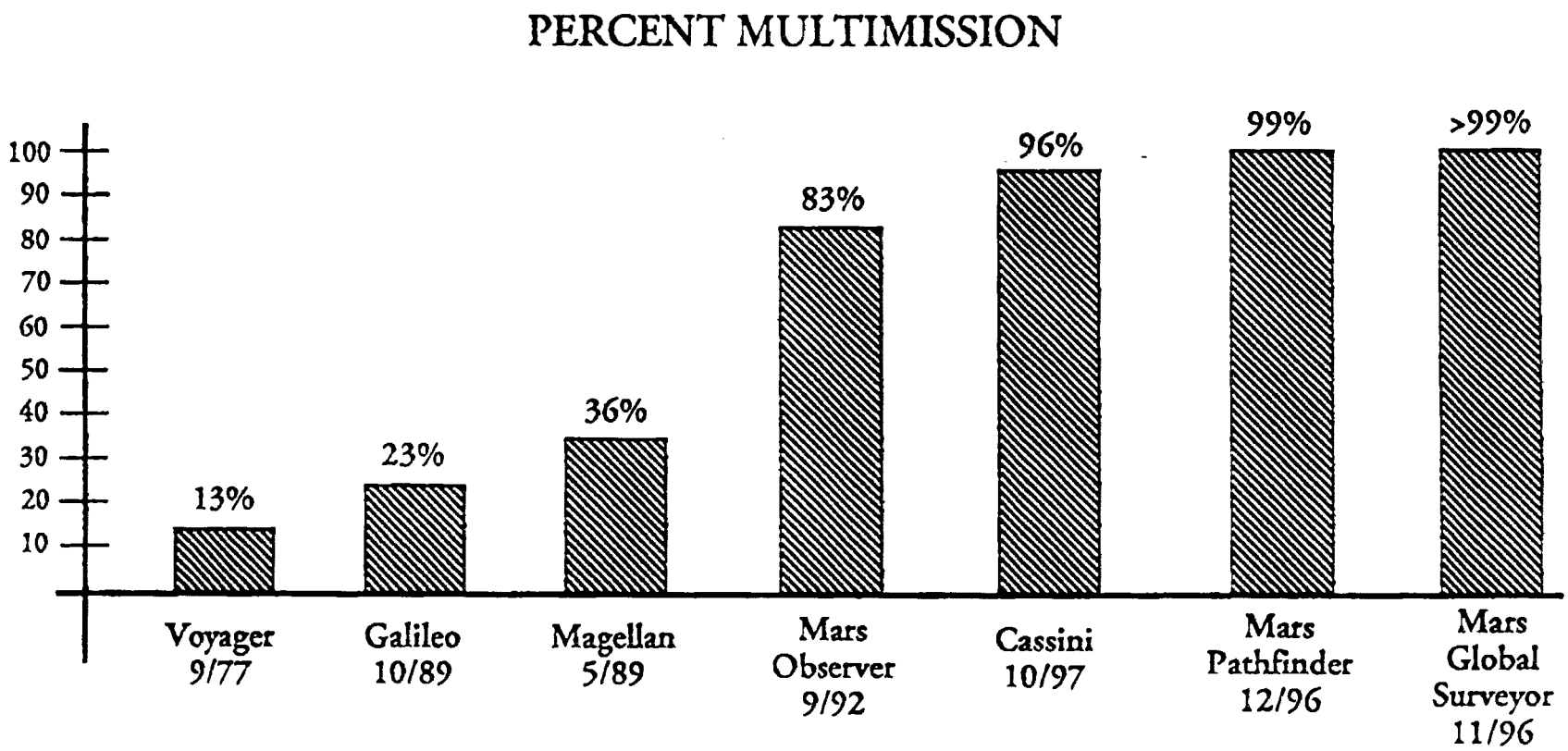

GROUND DATA SYSTEM DEVELOPMENT COSTS

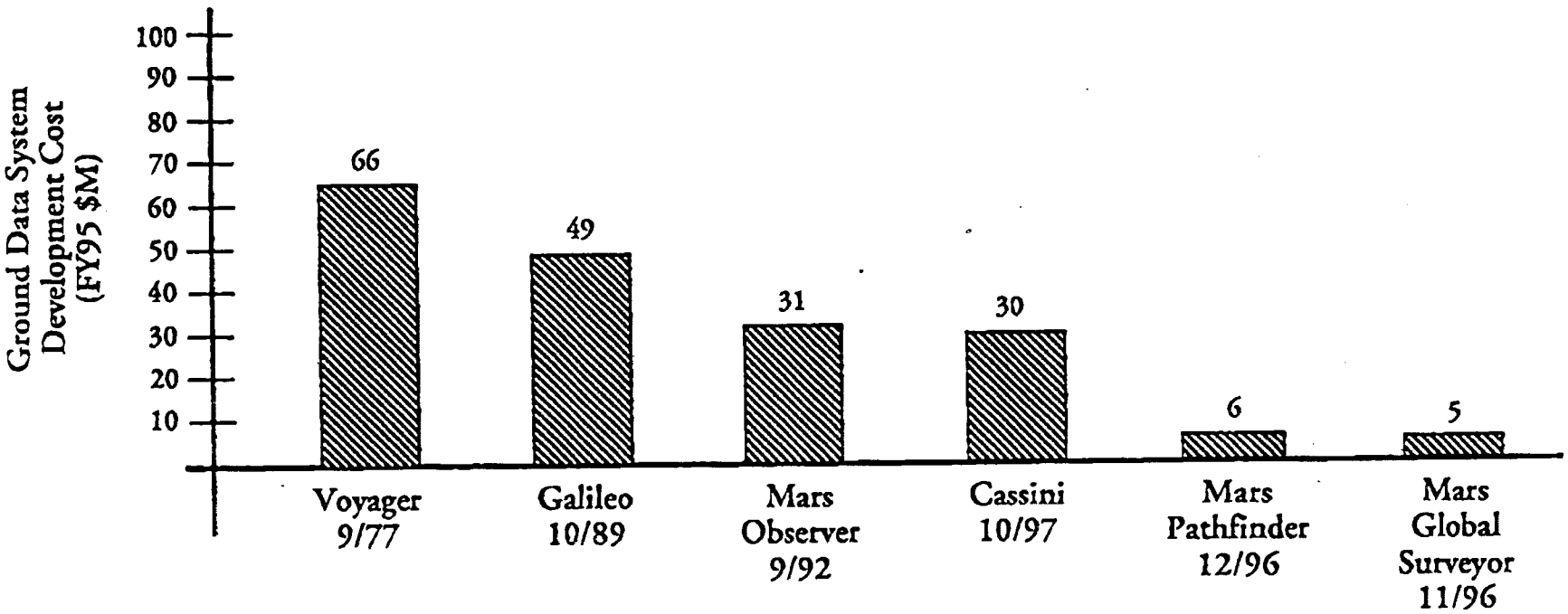

Future Mission Architectures

Barbara Anderson

Ground Systems Architecture Workshop

February 1997

FUTURE MOS VIEW

- Service agreements define WHAT is provided
  - Basis of requirements and Cost Negotiation
  - The operations user view
- Architecture : HOW to build service package
  - Developers view
  - Must allow re-use, mix and match
  - Objects are a start

LAYERED MOS ARCHITECTURE

JPL MGSO

- Ground systems and software, not just system
  - "plug and play" MOS applications, functions
  - alternative versions for varying service specifications
  - dynamic configuration changes, recovery
  - easy insertion of new technology components
  - share technology development across broad user base
  - use of mixed COTS, vendor independence
- "Matched" space and ground components within layered MISSION architecture
- MOS service components common between NASA, DoD and commercial satellites

Service System Architecture

JPL MGSO

Figure 3.4-1 TMOD SERVICE SYSTEM - LAYERED VIEW

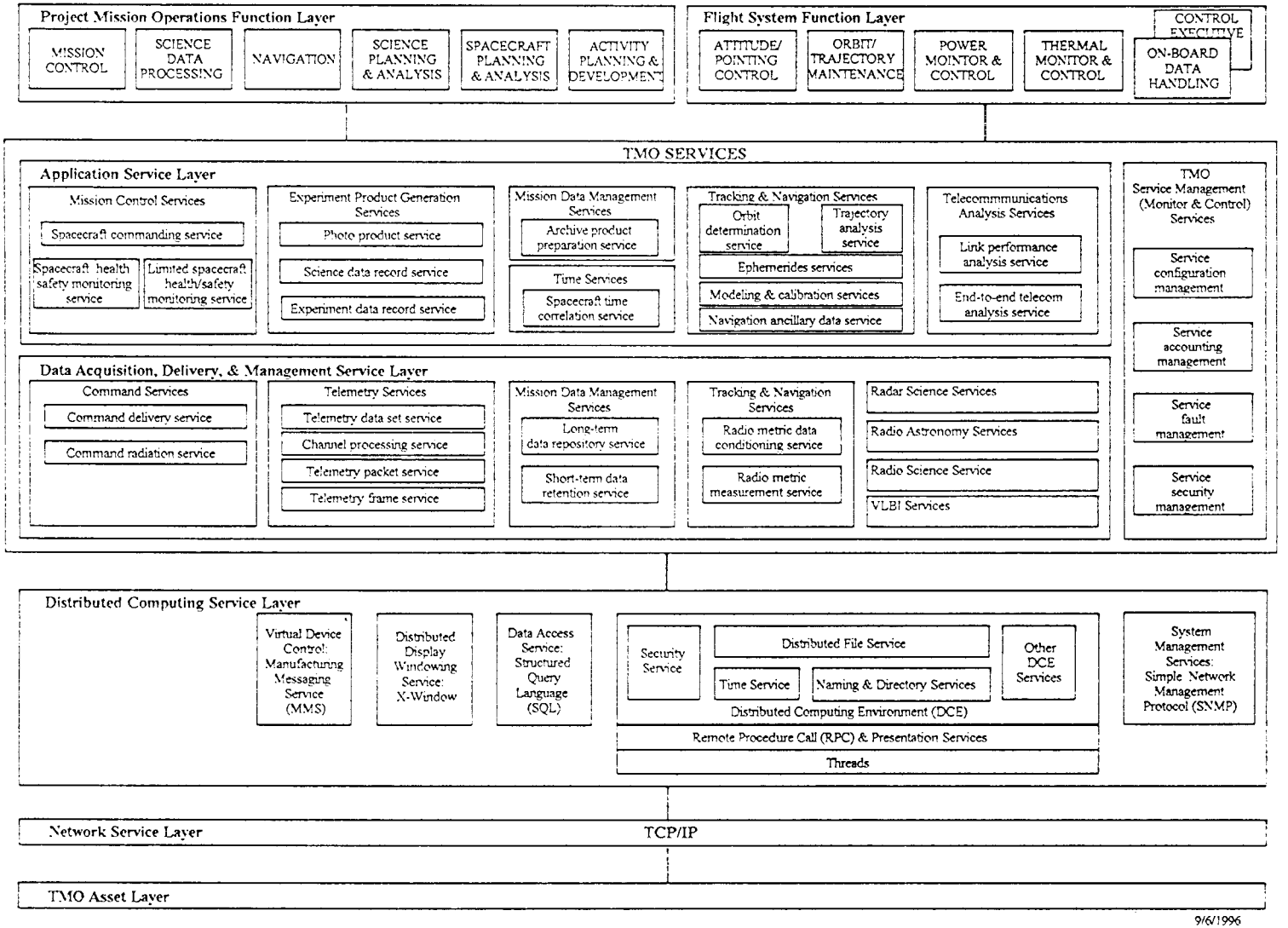

9/6/1996
Draft V.6 W. TAI

Trans-global Mission Architecture
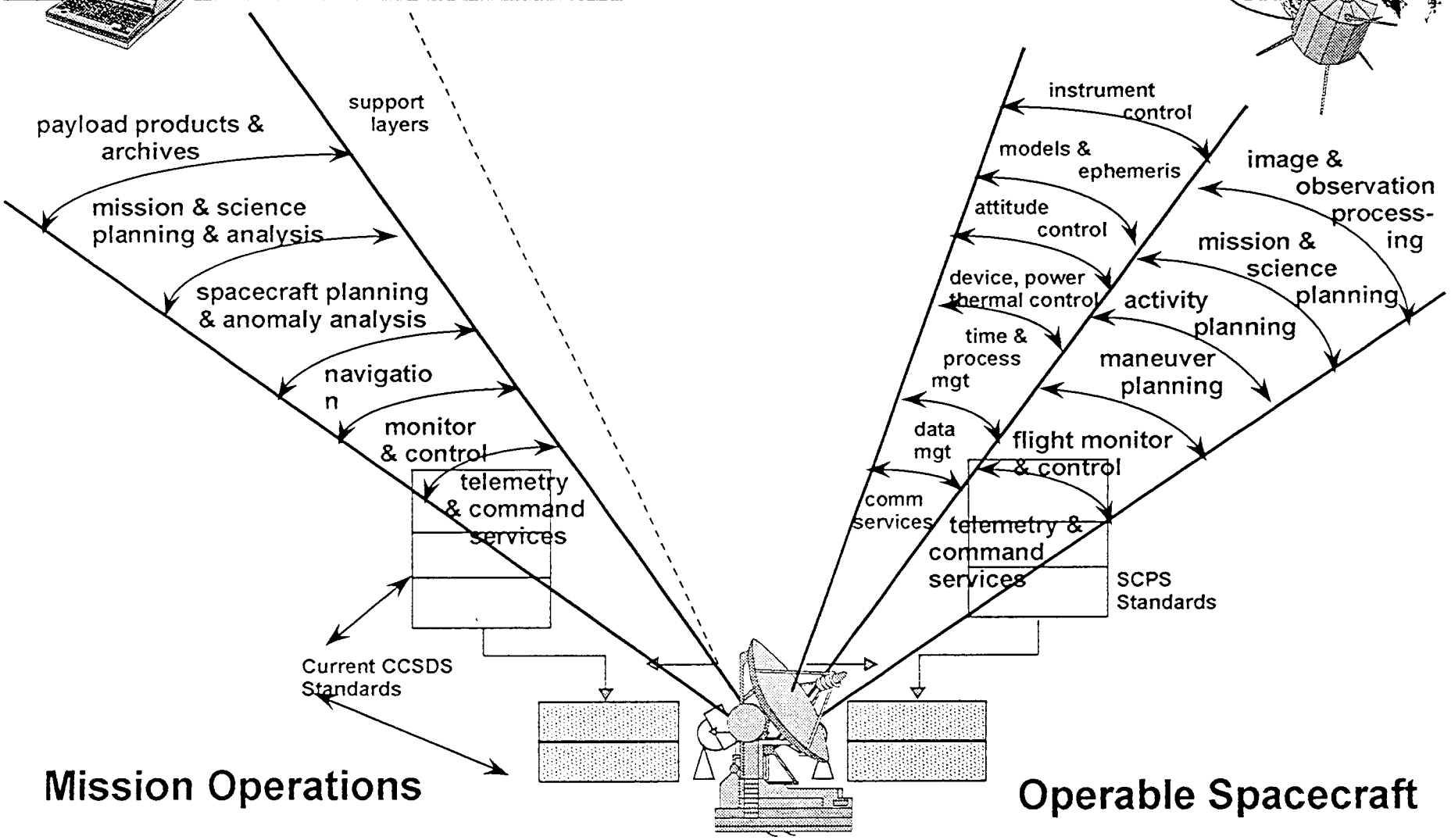
Parallel Layered Control