PUT YOUR OWN SPIN ON TECHNOLOGY

Editor: Thanks to Diane Fisher (writer) and Alexander Novati (illustrator) for this activity. The research described in this article was partially carried out at the Jet Propulsion Laboratory, California Institute of Technology, under a contract with the National Aeronautics and Space Administration (NASA).

NOTES TO THE TEACHER

Many of the inventions and materials that we take for granted in our everyday lives came about through basic research originally done to fulfill the needs of the space program. Attempting to do things that have never been done before is the best incentive for innovation. And what human endeavor is more trailblazing than going into space, whether it is to send people to the moon or to place spacecraft in orbit to study our own planet?

This activity introduces students to some of these useful, even life-saving products, as well as the process of designing them. Some of the products are technologies that start out to serve a particular purpose in space or aeronautics. But then clever inventors, engineers, and entrepreneurs find new uses. For example, excimer laser technology developed at JPL to study Earth's ozone layer has been further developed and adapted for use in laser angioplasty and vision correction surgery. Digital cameras, becoming almost common household items, use active pixel sensor technology developed by NASA for taking digital images in space.

After introducing the idea of space technology spinoffs, we give a few examples that may be familiar to most students, then invite students to come up with their own spinoff ideas, given an additional list of space technologies from which to choose.

The article, as printed on the following pages (minus this introduction), is suitable as a handout for upper middle school and high school students. The students could do the assignment individually or in pairs. A contest to invent the best spinoff could make it more fun and exciting. The activity can also be adapted for younger students. Small groups could work together. Or the whole class could brainstorm ideas and develop them. Questions are included at the end of the article to stimulate thinking and discussion.

This computer game joystick, made by ThrustMaster, Inc., uses technology developed for a Space Shuttle hand controller. The design for these toy gliders (AeroNerf Gliders), made by Hasbro, Inc., benefited from NASA wind tunnel and aerodynamic research.

More information about space program spinoffs can be found on JPL's Technology Applications Program web site at http://technology.jpl.nasa.gov/. Also, see the U.S. Space Foundation's web site at http://ussf.org and click on "Space Tech. Hall of Fame." For our activity, we tried to find technologies and spinoff products that children would find interesting. However, more advanced students may enjoy delving into the vast NASA searchable spinoff data base at http://www.sti.nasa.gov/tto/spinselect.html.

Other activities and interesting facts can be found at NASA/JPL's web site for children, The Space Place, at http://spaceplace.jpl.nasa.gov.

Put Your Own Spin on Technology

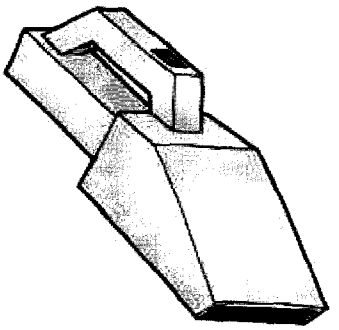

If you have ever seen anyone use a cordless drill, cordless power screwdriver, or cordless Dustbuster® vacuum cleaner, you know how handy they are. You don't have to worry about finding someplace to plug them in, or find an extension cord because the cord is too short to reach to where you need to use them (like outside someplace).

Another neat invention is barcoding. When you go to the supermarket, the checker just passes the items in front of a laser, which reads the special striped pattern on the item and feeds the information to the computer. The computer converts the pattern to numbers and finds the item in its database. Thus, the computer instantly knows what the item is, how much it costs, how many are left on the shelf, and when to order more.

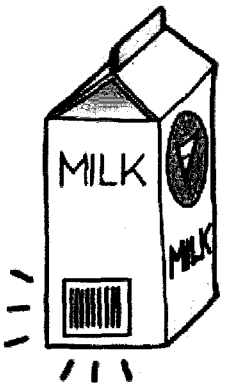

Did you know that both cordless appliances and barcoding were originally invented for the space program? The first cordless tools were used by the Apollo astronauts to drill into the moon's surface and collect soil and rock samples to bring back to Earth. Barcoding was invented initially to help NASA keep track of millions of spacecraft parts.

Here are some other space program spinoffs:

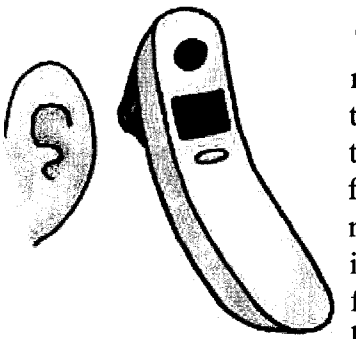

Ear thermometer: Takes an instantaneous reading of body temperature. No sticking a glass tube under your tongue for 2 or 3 minutes. (No more tricking your Mom into letting you stay home from school by drinking hot water first!) Great for checking on sick babies. The ear thermometer uses special infrared sensor technology developed to detect the birth of stars. Hot objects put out more infrared energy than cool objects. We cannot see infrared, but we detect it as heat.

Smoke detectors: Now used in most homes and other buildings, they were first used in NASA's Skylab orbiting space station in 1973.

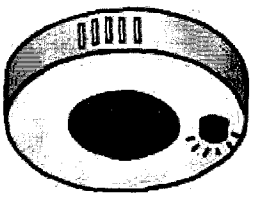

Medical imaging: Magnetic Resonance Imaging (MRI) and Computer Aided Tomography (CAT) are imaging technologies that allow doctors to see what is wrong inside their patients' bodies without doing invasive and painful procedures to find out. These technologies use digital signal processing and digital imaging technologies that were initially developed to make and process images from space. This amazing MRI image of the inside of a human head is from *The Basics of MRI*, J.P. Hornak (http://www.cis.rit.edu/htbooks/mri/) and is used with permission from the author.

Cold weather gloves and thermal boots: These gloves and boots have heating elements that operate on rechargeable batteries. They were adapted from a design originally used to keep astronauts warm or cool in the temperature extremes of the Apollo moon mission.

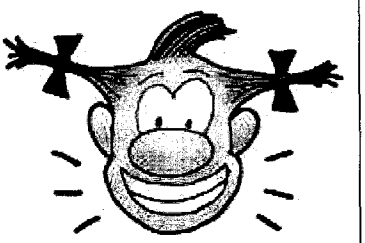

Invisible orthodontic braces: These teeth straightening braces use a ceramic material called polycrystalline alumina that was originally developed by NASA. The ceramic is used to make an almost invisible, tooth-colored bracket that is cemented to each tooth, and then connected to the other teeth by a very thin metal wire.

Inventors and Designers

In many cases, inventors have used a technology developed for the space program to come up with something entirely new, like the ear thermometer. In other cases, designers have used these new technologies (for example, barcoding) in new situations. Or, they have used new materials (such as the ceramics used in braces) to improve the designs of existing inventions.

Anyone can come up with a space technology spinoff. The materials and technologies developed for the space program belong to everybody, not just the engineers, scientists, and astronauts working in the space program. NASA often works with inventors, designers, and new companies to help make sure the new technologies get the widest possible use and benefit the greatest possible number of people.

We would like to invite you to think of some new uses for some of NASA's space program developments. We will describe some new materials and technologies developed for the space program. Think of some other uses these new technologies might have in such areas as health and medicine, the home, the environment, public safety, recreation, transportation, computer technology, and industrial productivity. Your ideas can be as far out as you want. Don't worry about how practical or impractical it might be to actually make your invention.

Here are some new technologies. Now, look for the possibilities!

- *Temper foam* is a "memory foam," so-called because it matches the contour of the body pressing against it and returns to its original shape once the pressure is removed. As a shock absorber, a three-inch-thick pad of temper foam has the ability to absorb the impact of a 10-foot fall by an adult.
- NASA research on *airfoil design* has greatly improved our understanding of how air and water flow over shapes. An airfoil is anything that is shaped so that air or water flowing over and under it causes it to lift like an airplane wing. Shapes like this are often used in things that need to flow smoothly through air or water, or things that need to go fast, or need to lift or get lighter in weight as they go faster.
- JARtool (JPL *Adaptive Recognition Tool*) is a computer program that can be trained to find a particular object in an image. The user trains the system by marking examples in a set of images using a mouse cursor on a computer screen. Then, the computer program is run on a new set of images and it picks out new instances of the object it has been trained to find.

- *Electroactive Polymers* are materials that bend or change stiffness properties when an electric current is applied to them. When the current stops, the material returns to its previous shape and characteristics. They are being developed and tested for use as artificial muscles. (See illustration.)

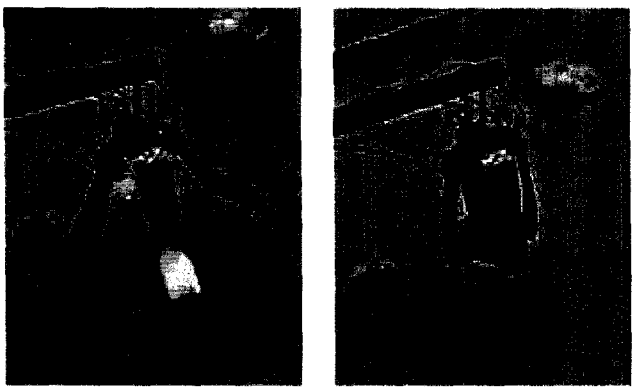

Electroactive polymers bend when a current is passed through them, so they can be used like artificial muscles (like a hand, in this picture).

- SMART, *Sound Modification and Regulated Temperature* compound, is a liquid plastic mixture with exceptional energy and sound absorbing qualities. It is derived from a very elastic plastic which was used for noise reduction in the Apollo program.
- Hand held *infrared camera* is sensitive to heat, rather than light. This camera was developed to observe the plumes from the rockets that launch the Space Shuttle.
- *Heat shield tiles* for the Space Shuttle are made of a ceramic material that can withstand the extremely high temperatures encountered during re-entry into Earth's atmosphere.
- A *superabsorbent fabric* can hold up to 400 times its own weight in water.
- NASA *space suit technology* includes techniques for circulating cold water in a garment to keep the wearer cool. It may allow a person to remain in a very hot environment 3 times longer than would normally be possible.

Draw a picture of your invention, design, or new technology application. Then, write a description of your idea that you might use to help convince someone to invest money or time in helping you make the product. Answer as many of these important questions in your description as seem to apply to your idea:

What is this item?

What is its function?

Is it a new invention, a new design of an existing product or process, or a new use of an existing technology?

What problem does it solve?

Who would use it and under what circumstances?

How is it an improvement over existing designs or processes?

Does the new design have more market appeal than existing designs?

Does the new design make the product safer than existing designs?

What is it made of?

What are its physical dimensions and weight?

How will this idea change the world?

Take the Next Step

Build a model or prototype of your idea. Inventors often use what are normally considered children's building materials, like clay or interlocking blocks, to make their early models. They also use computer aided design (CAD) tools to help.