# MER Rover Surface Thermal Design

## 2002 Aerospace Spacecraft Thermal Control Technology Workshop

Charles Phillips, Keith Novak, Chern-Jiin Lee
Jet Propulsion Laboratory, Applied Science Laboratory
March 7, 2002

# Topics Covered

- Description of Rover Configuration
- Temperature/Energy Requirements
- Example Mars Environmental Profiles
- Example Rover Electronics Dissipation Profiles
- MER Rover Design Philosophy
- Description of Rover Major Heat Loss Paths
- Description of MER Surface Thermal Model
- Example Temperature Predicts

# I. Rover Configuration - Stowed on Lander

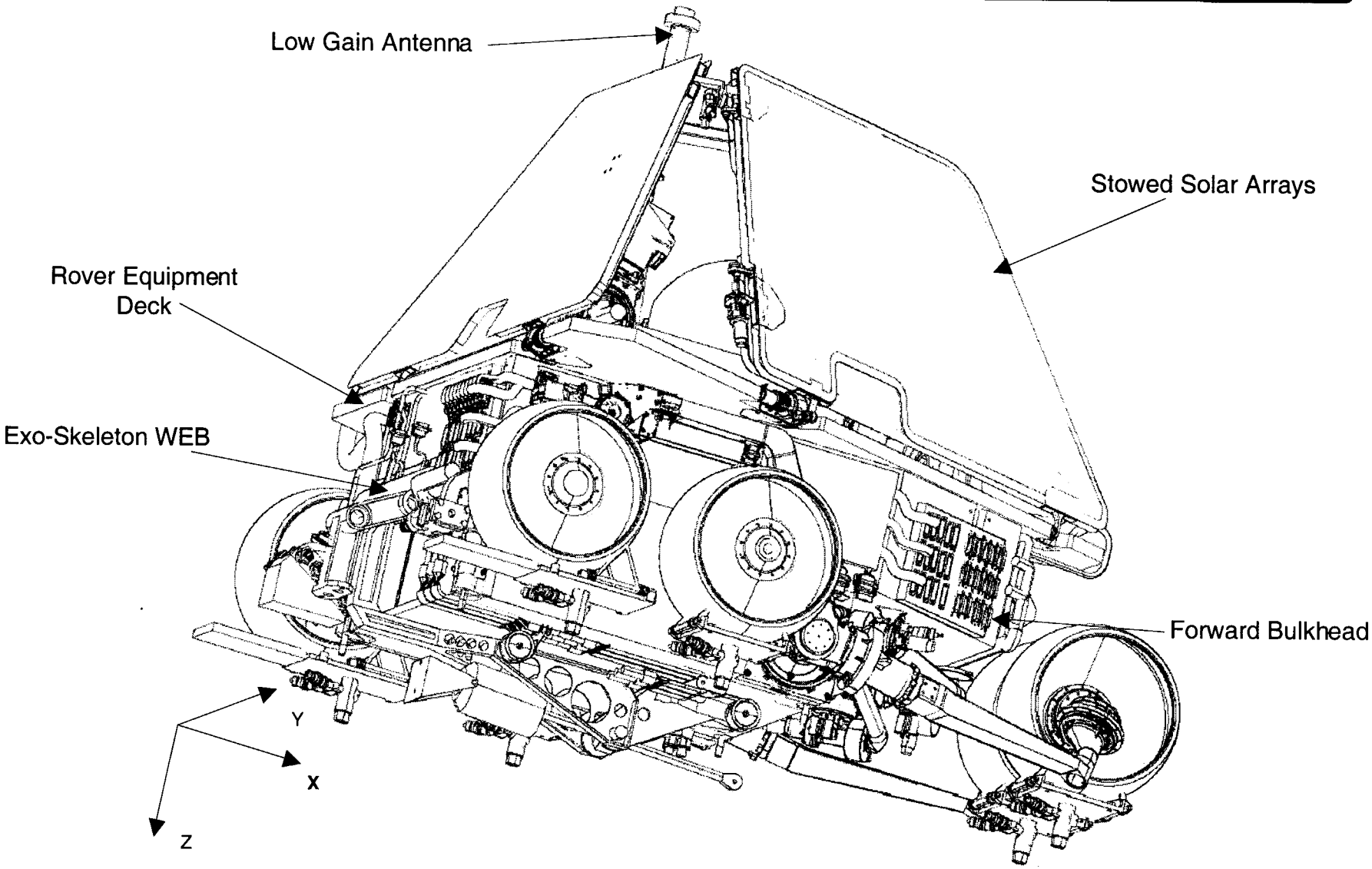

# I. Rover Configuration - Deployed on Lander

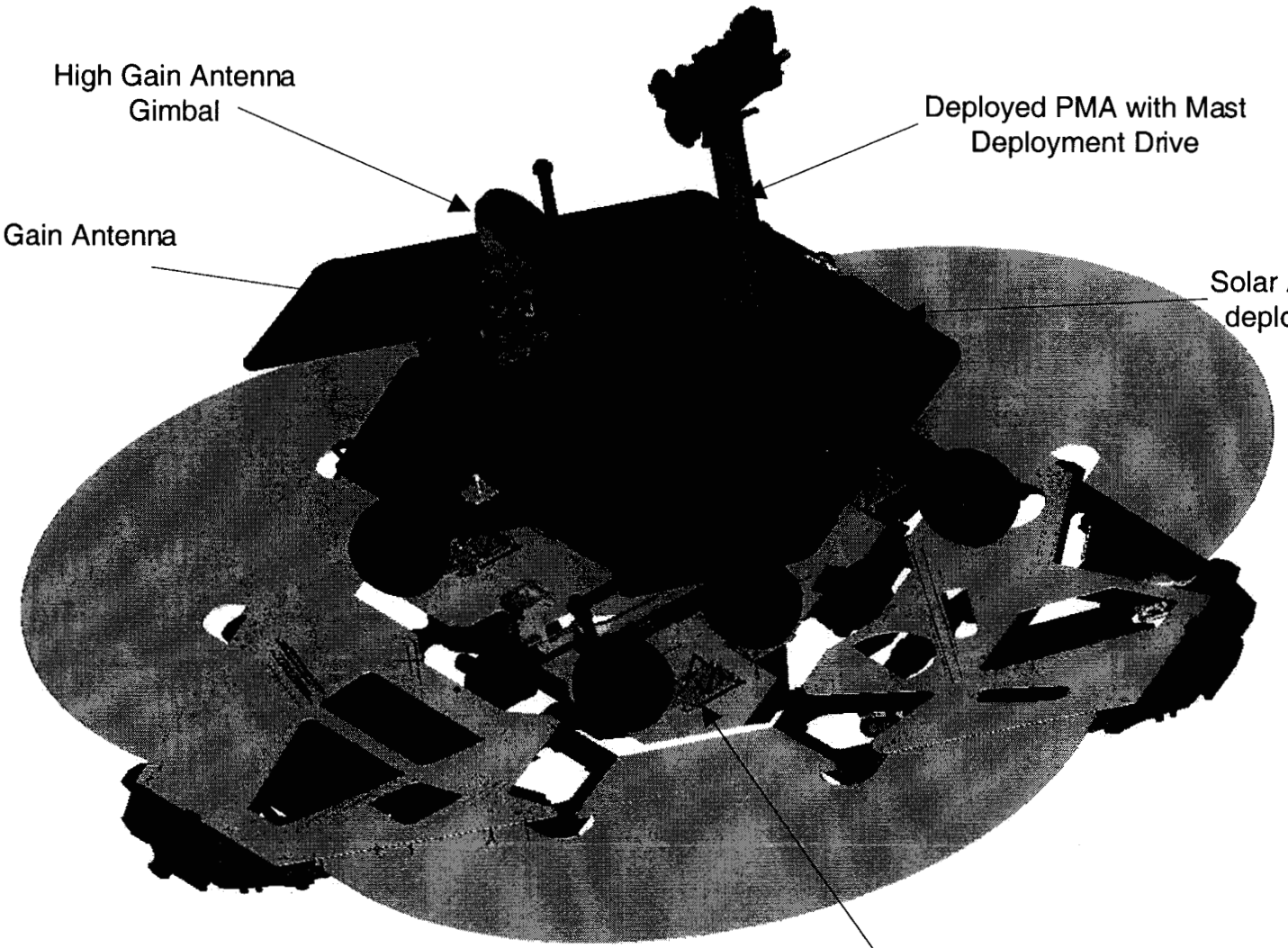

# I. Rover Configuration - WEB & Rover Electronics Module

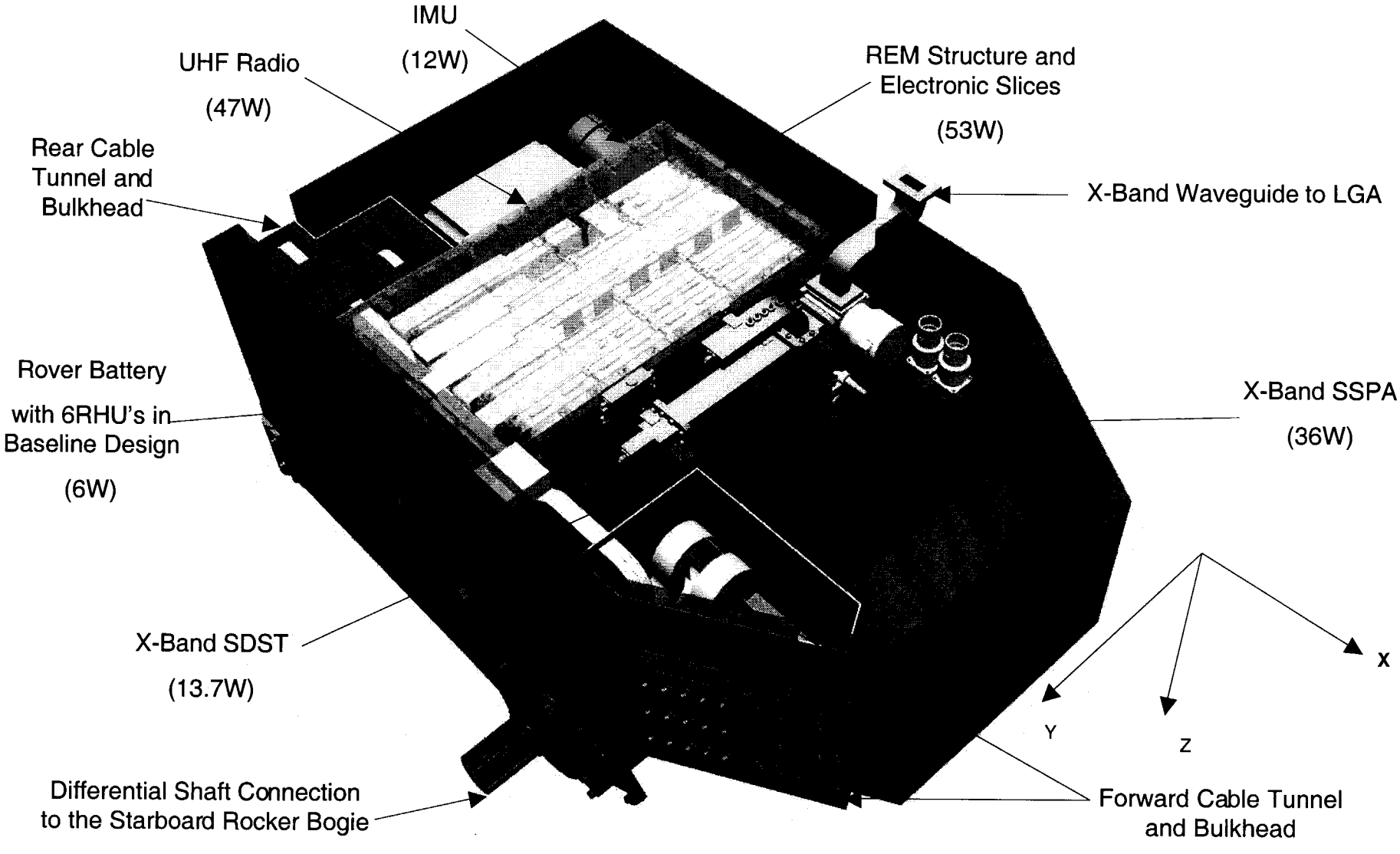

# II. Driving Requirements - Allowable Flight Temp Limits

| | | |
|---|---|---|
| **Rover Science and Electronics:** | -40°C / +50 °C | non-op |
| **SDST & SSPA** | -25°C / +50 °C | op |
| **Batteries** | -20 °C / +30 °C | non-op |
| (max spatial gradient = 5C) | -20 °C / +30 °C | op/discharge |
| | 0 °C / +30 °C | op/charge |
| **Externally Mounted Items** | -105 °C / +50 °C | non-op |
| **Actuators** | -55 °C / +85 °C | op |
| **Camera Electronics** | -55 °C / +50 °C | op |

# I. Rover Configuration - WEB & REM

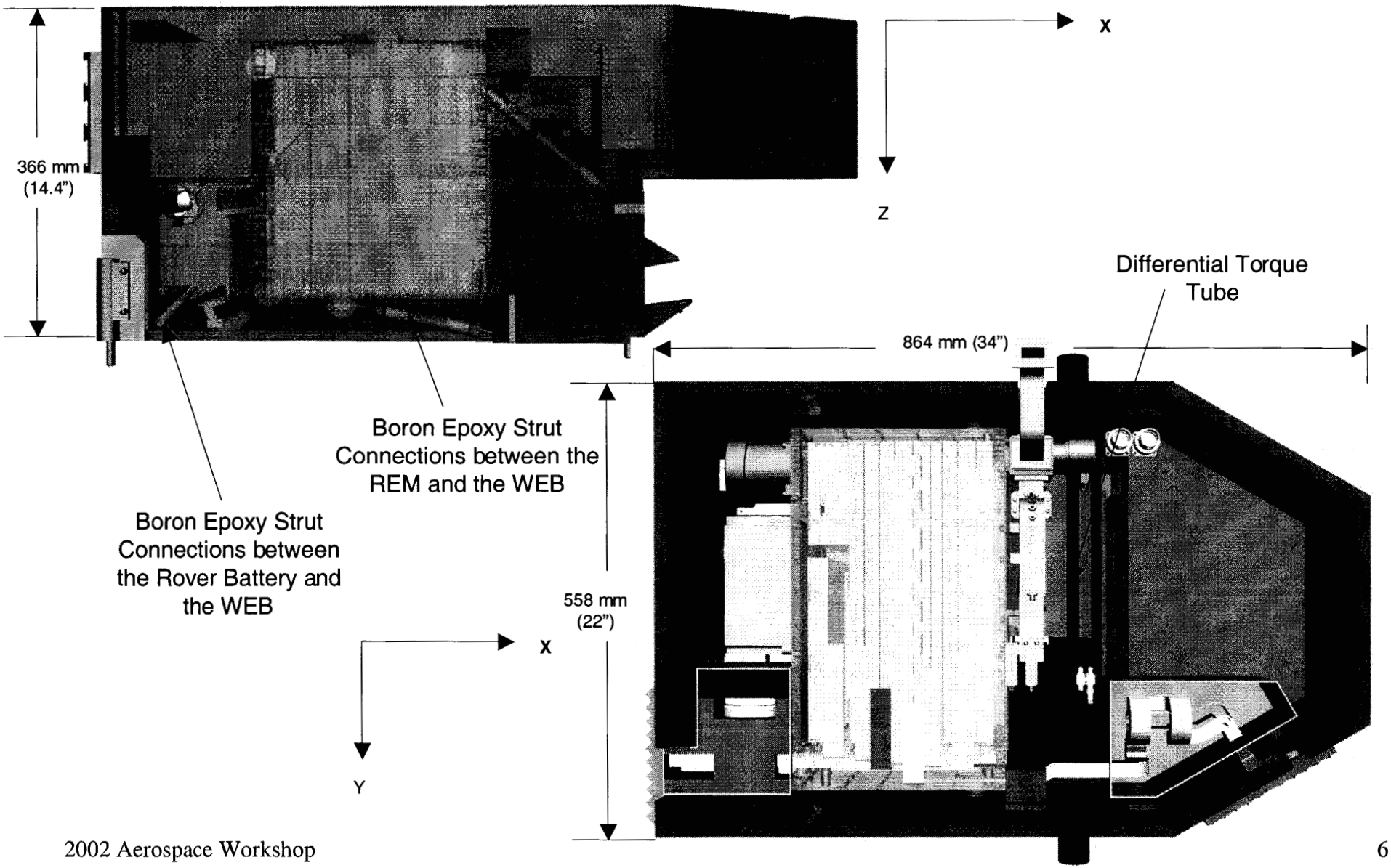

# II. Driving Requirements - Rover Survival/Warm-up Heater Energy

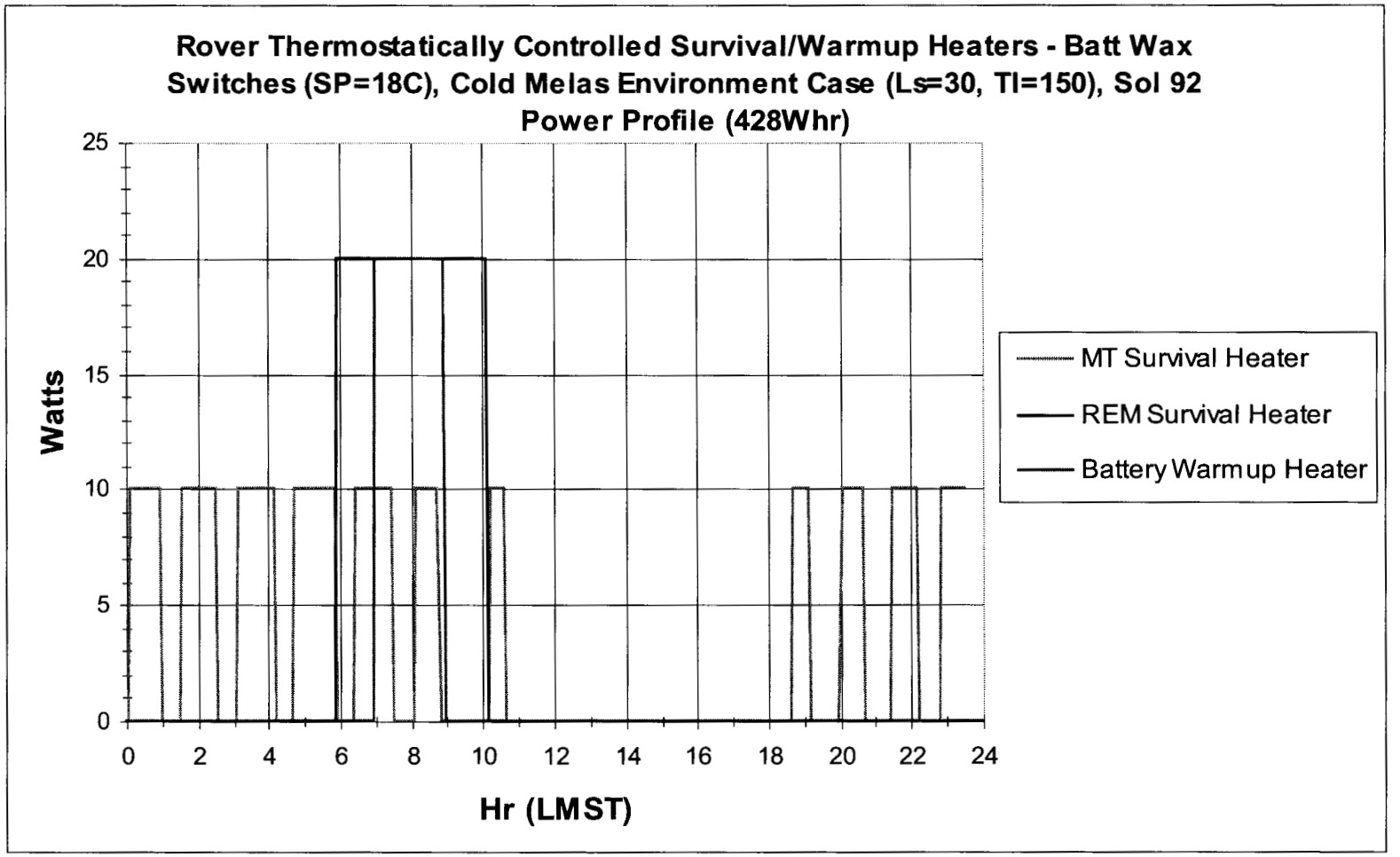


**Rover Survival/Warm-up Heaters Should Not Consume More Than 120Whrs During Mars Nighttime**

# III. MER Surface Thermal Environments - Typical Cold Case Environment Temps

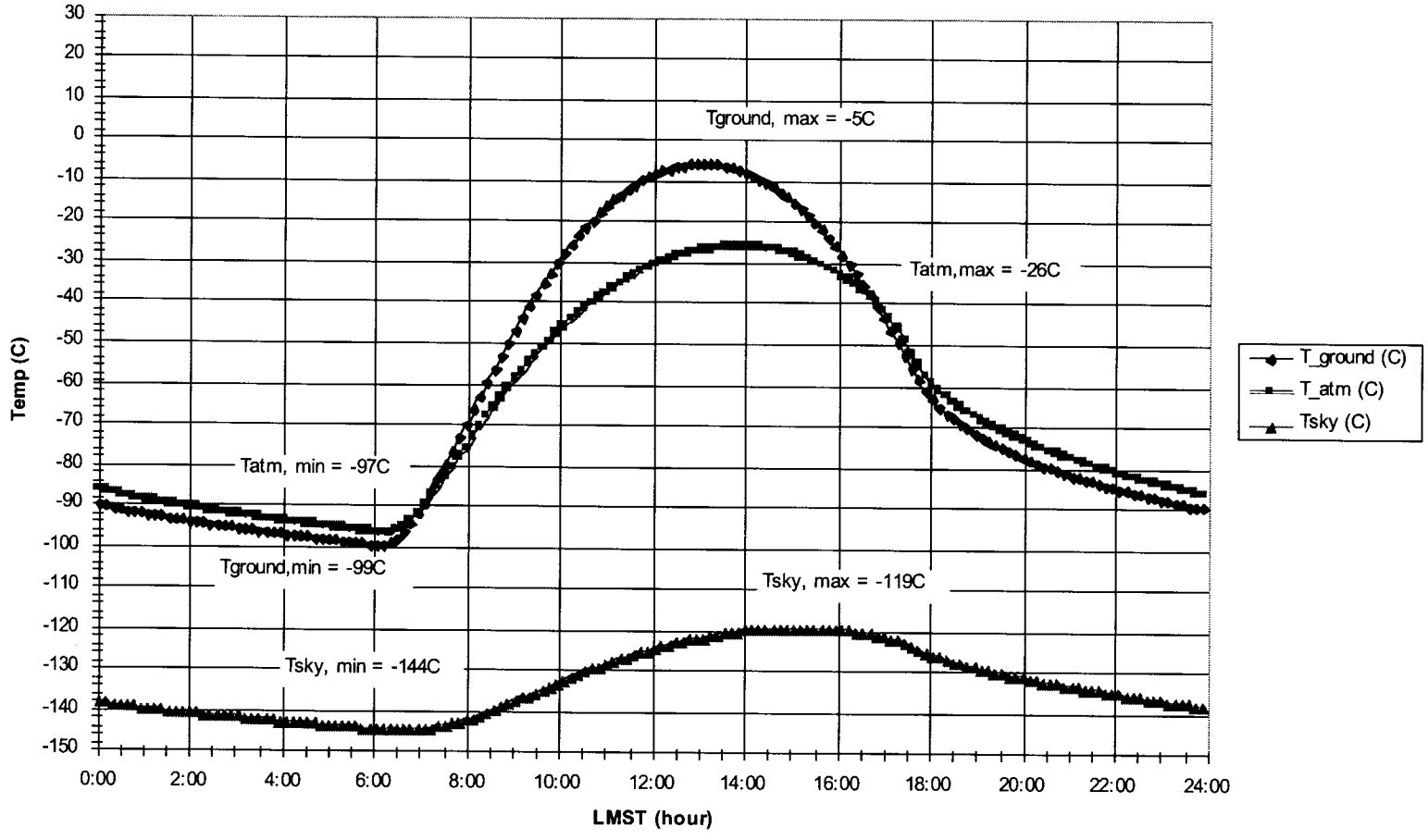

# III. MER Surface Thermal Environments - Typical Cold Case Solar Insolation

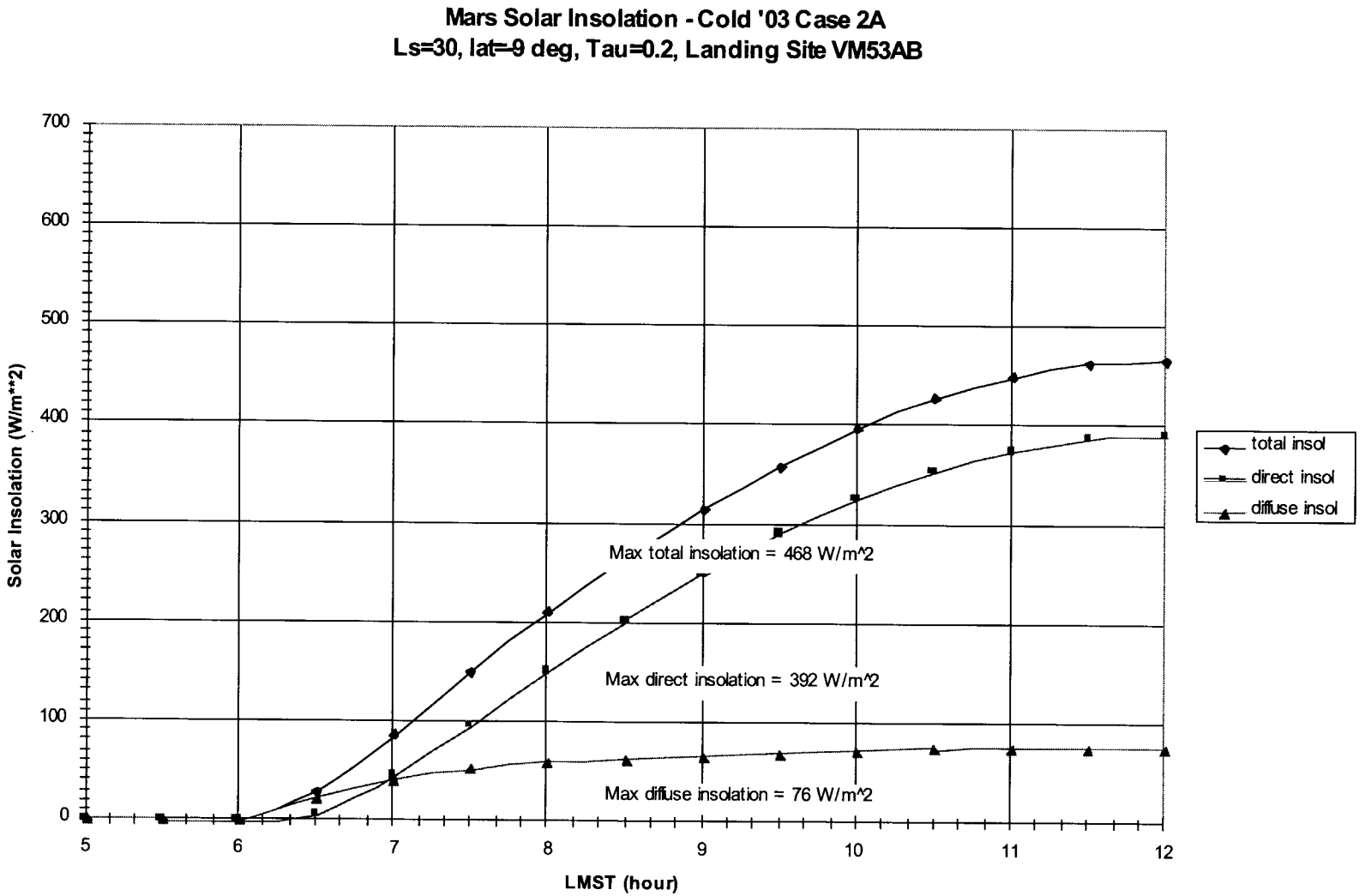

# IV. MER Electronics Power Profiles

- **Worst-Case Power Profiles**
  - **Hot Case - Maximum Internal Power Dissipation**
    - **High Science and Communications Condition**
    - **Energy = 629 W*hrs, 3 hours of Direct to Earth (DTE) comm**
      - **utilize all energy coming from solar arrays**
  - **Cold Case - Minimum Internal Power Dissipation**
    - **Margin Day Power Condition**
    - **Energy = 446 W*hr (Comm & CPU)**
    - **Allowable nighttime electrical heater energy consumption = 120 W*hrs**
      - **minimize battery usage**

# V. Thermal Design Approach - Exoskeleton WEB w/ Aerogel

- 1mm thick M55J Carbon composite facesheets
- over 3.1 lb/ft$^3$ 5056 Al H/C core, 13mm thick side walls, 8 mm thick on bottom wall
- 25 mm of carbon-opacified solid aerogel insulation on all walls except +Z (20mm)
- significant cutouts (6% of area) in aerogel for struts, fittings, cable tunnels, RHU insertion, heat switches
- 0.012" thick Astroquartz composite faceskin closeout on local 0.020" thick "Z" spars

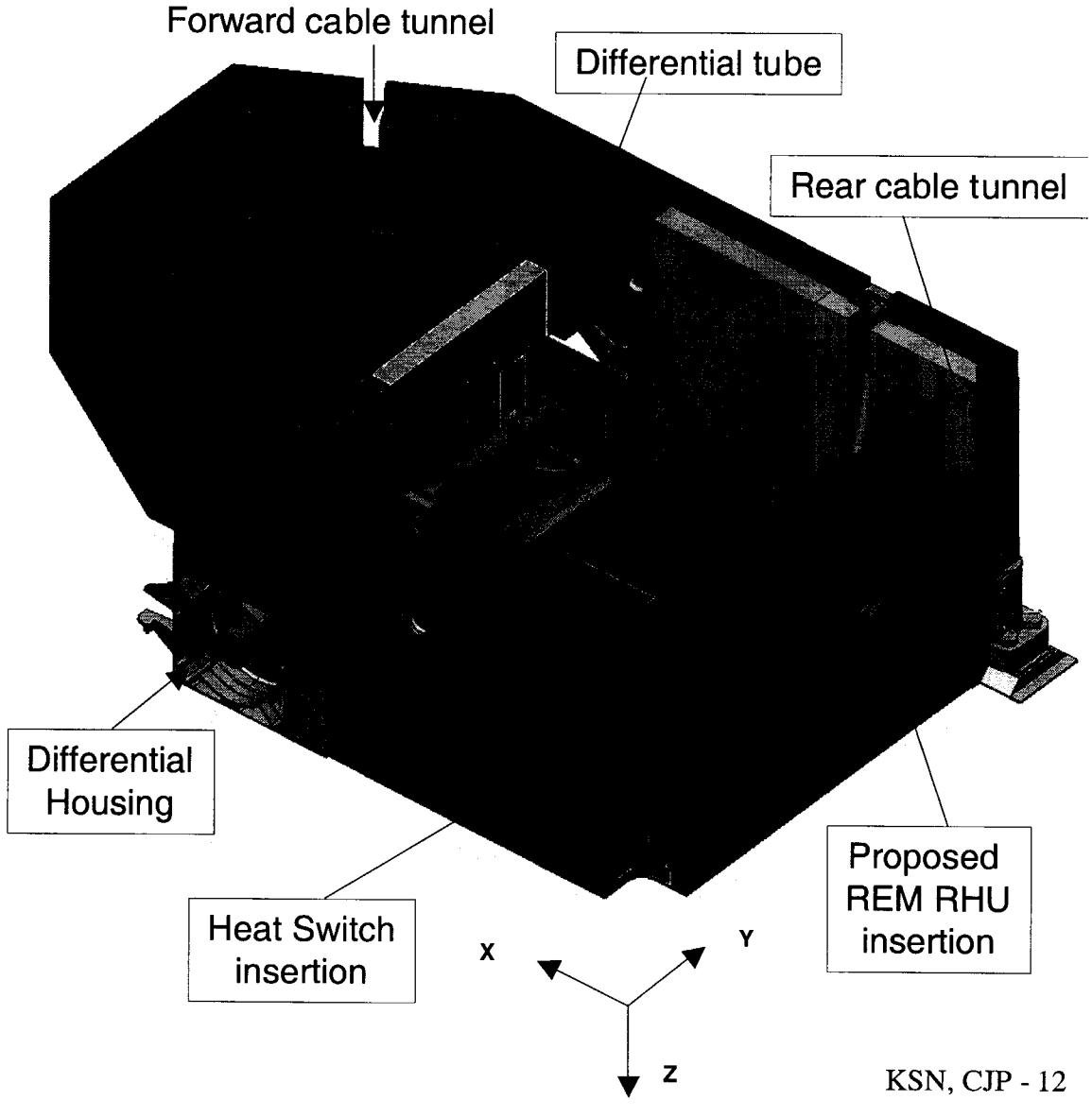

# V. Thermal Design Approach - Exploded View of Rover Structure

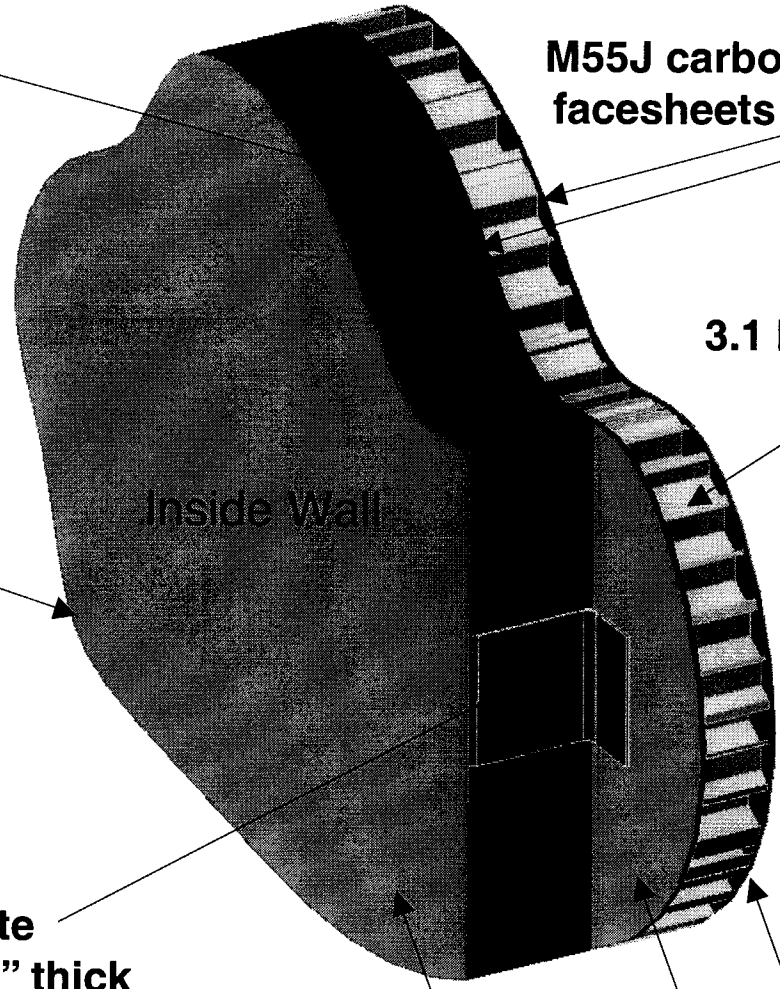


carbon-opacified aerogel bricks - 20mm to 25 mm thick

M55J carbon composite facesheets - 1mm thick

Al H/C core - 3.1 lb/ft^3, 1/8" cell size

Astroquartz composite face skin closeout - 0.012" thick

Astroquartz composite local "Z" stiffeners - 0.020" thick

Co-cured goldized kapton layers - 0.001" thick

# III. MER Surface Thermal Environments - Typical Cold Case Solar Insolation

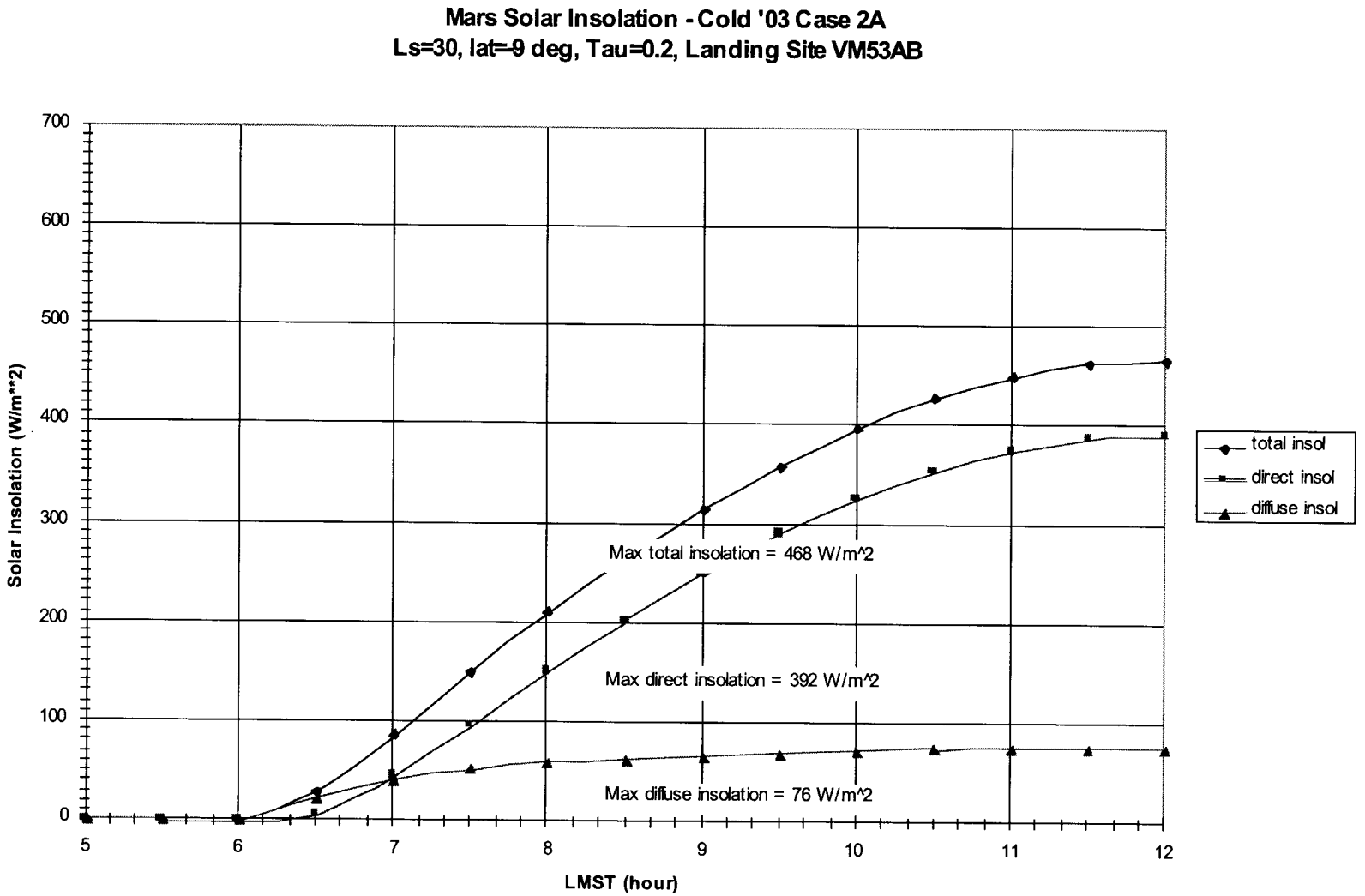

# V. Thermal Design Approach - Exploded View of Rover Structure

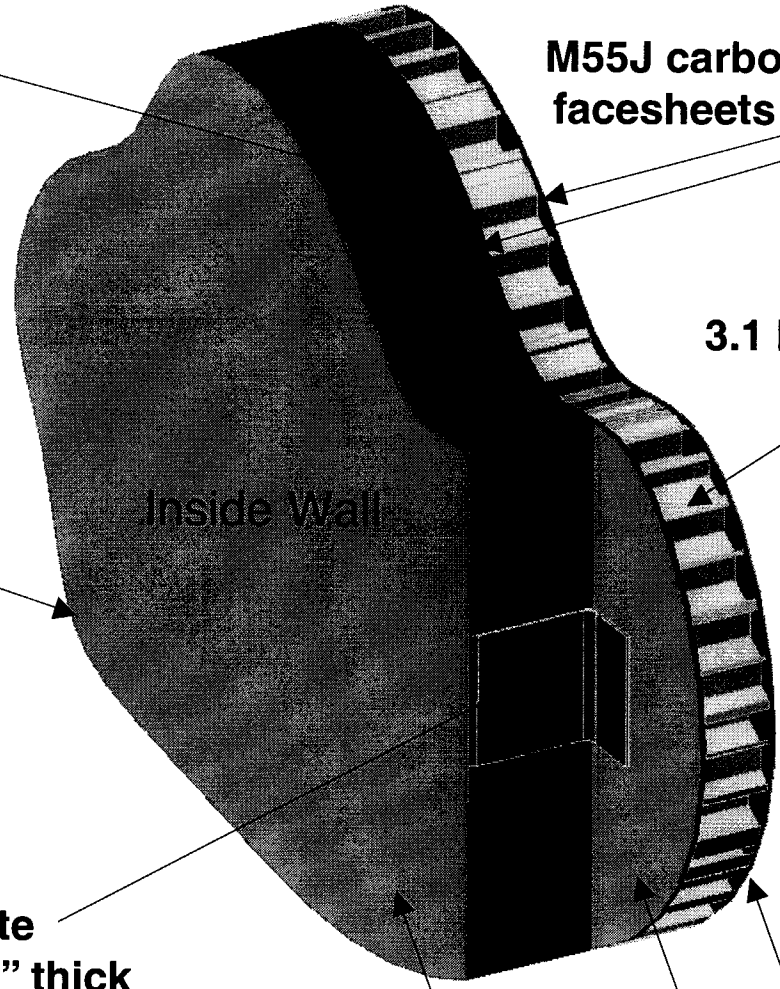


carbon-opacified aerogel bricks - 20mm to 25 mm thick

M55J carbon composite facesheets - 1mm thick

Al H/C core - 3.1 lb/ft^3, 1/8" cell size

Astroquartz composite face skin closeout - 0.012" thick

Astroquartz composite local "Z" stiffeners - 0.020" thick

Co-cured goldized kapton layers - 0.001" thick

# V. Thermal Design Approach - RED w/ Aerogel & REM w/ Struts

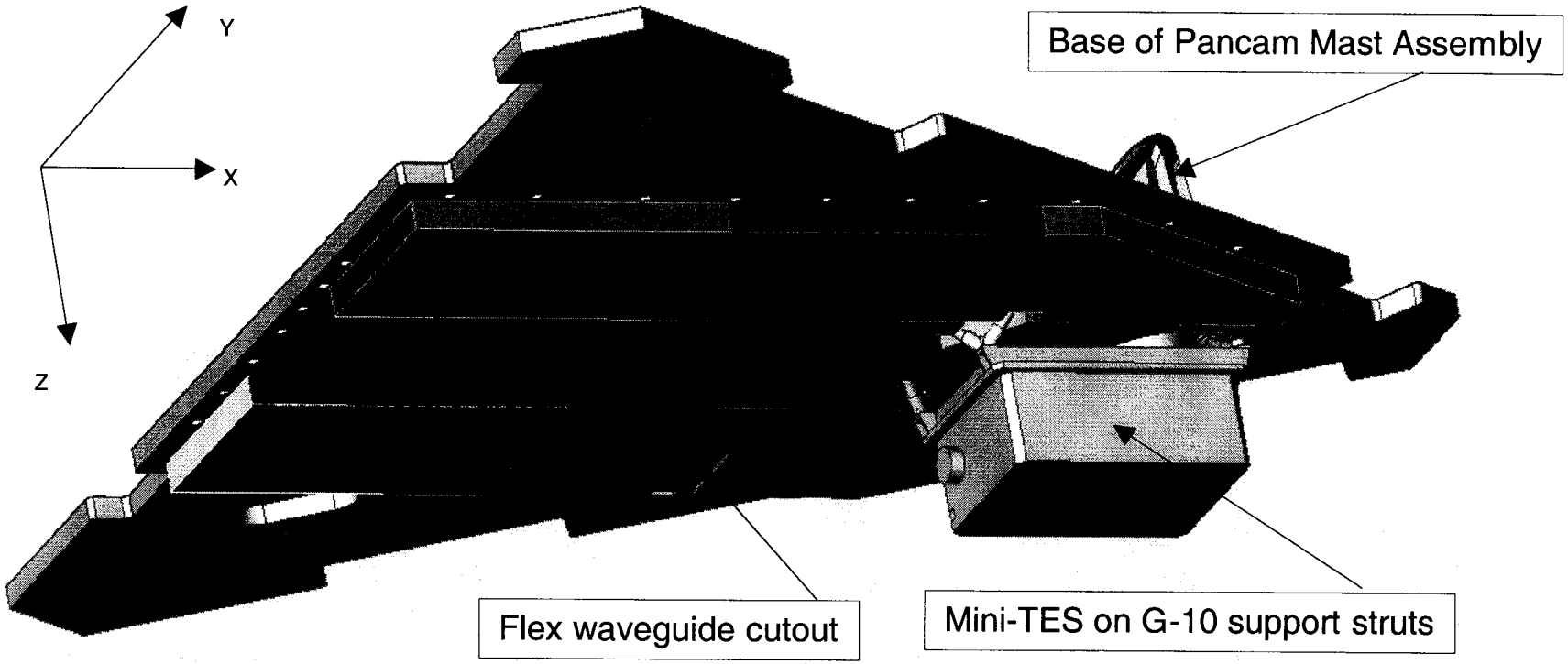


- 25mm thick carbon-opacified aerogel
- Cutouts for MTES telescope & LGA flex waveguide

# V. Thermal Design Approach - REM with Struts

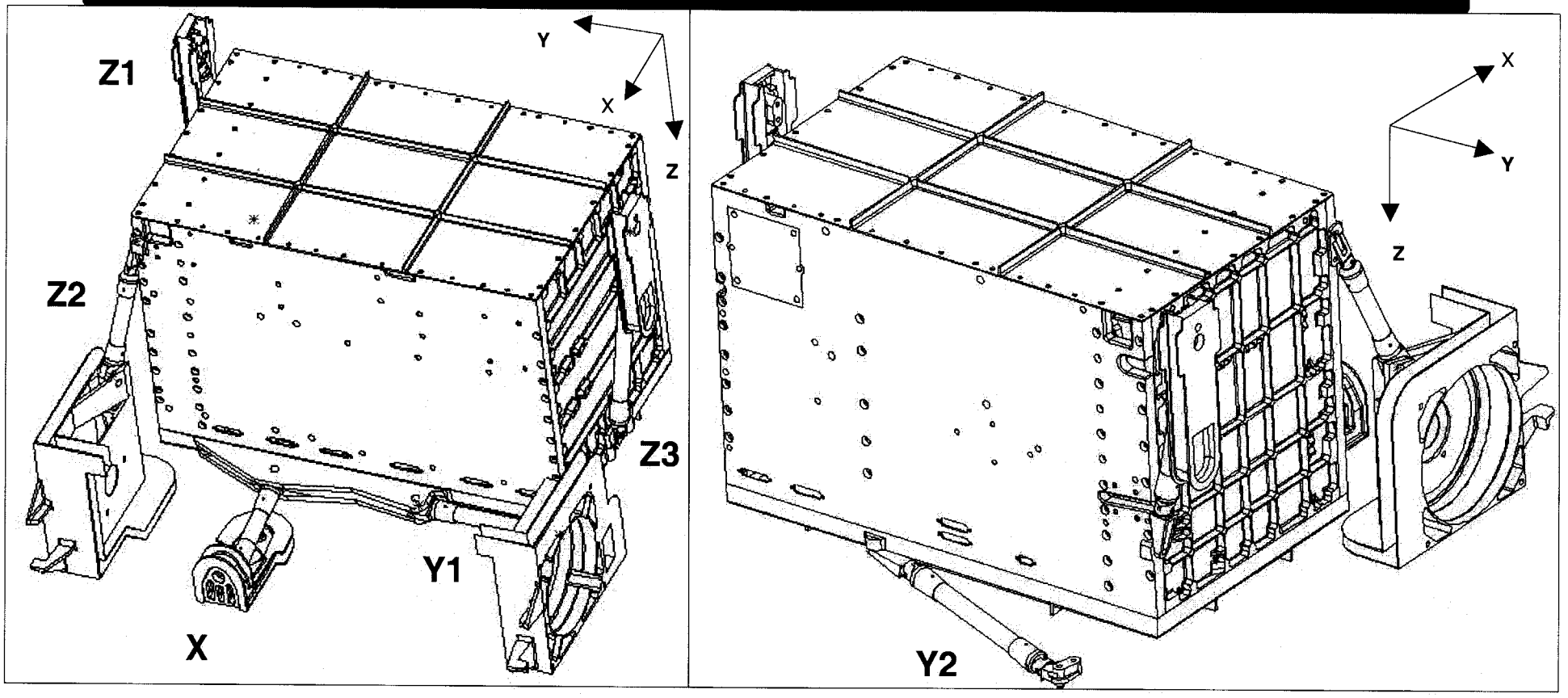


- Boron-epoxy struts (k=1.9 W/m*K)
  - free length of tube provides thermal isolation
- Ti fittings on REM & WEB

# V. Thermal Design Approach - Battery Mounted on Struts

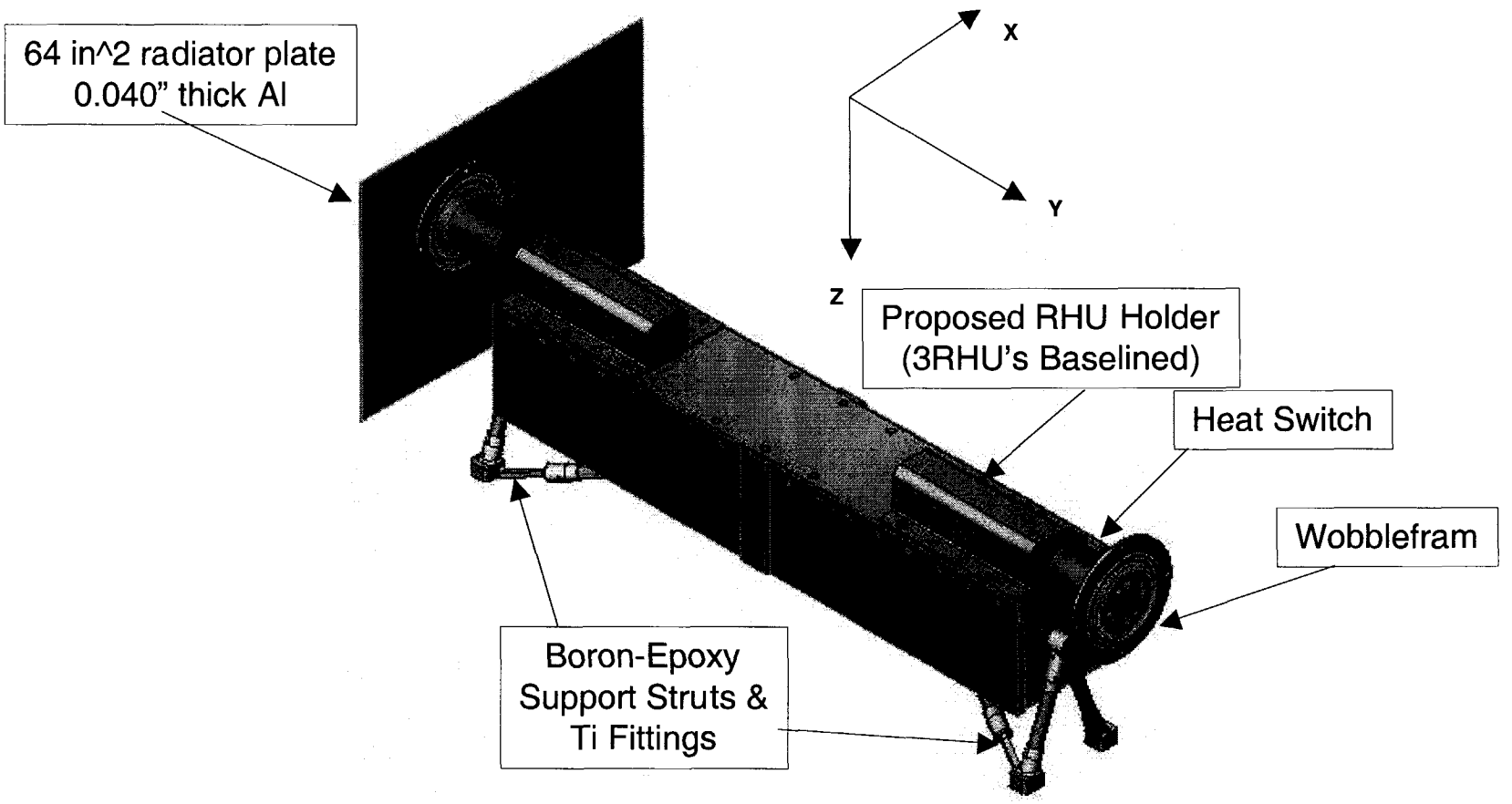

# V. Thermal Design Approach
# 3 Thermal Zones in WEB

- Mini-TES - wide temp limits (-40C/+45C) mounted to RED, isolated from Pancam mast, 10W survival heater (2.6kg)

- REM & Attached H/W - wide temp limits (-40C/+50C), utilize 2 RHU's in baseline design (2W) & 20W night survival heater, thermal mass (39.4kg) to absorb high heat dissipation in day

- Battery - tightest temp control (-20C/30C), isolated from REM, utilize 6 RHU's in baseline design (6.0W) & 10W night survival heater, thermal switches /radiators to reject heat in day, 20W warmup heater to prep battery for charging, mech. t'stats on warmup & survival heaters, (7.79kg)

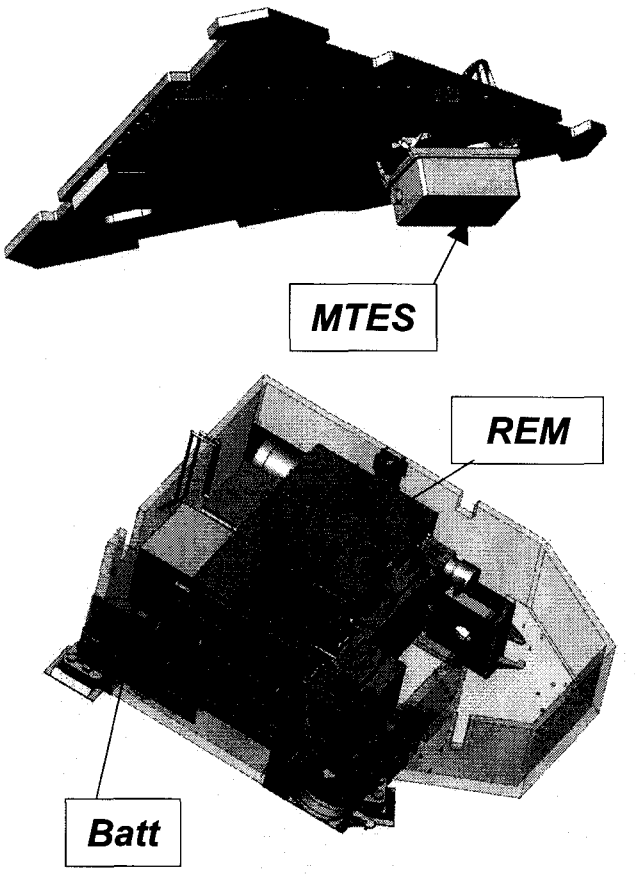


Note: All survival heaters controlled w/ mech t'stats

# V. Thermal Design Approach - Heat Loss Paths

## Major heat loss paths

- Through Aerogel insulation and cutouts in insulation
- **Flex cables - 0.5 m long cable tunnels, total Cu cross-section = 0.23 in^2**
- **Mini-TES to PMA - mounted to top & bottom of RED, on G-10 bipod struts, radiative and gas conduction heat losses**
- **Differential housing - backed with 0.5" aerogel insulation**
- **HRS tubing - stainless steel section thru -X WEB wall**
- **RF Coax lines (6) - in cable tunnels**
- **Support Struts for REM, Battery & MTES**
- **Battery Heat Switches to External Radiators**
- **Insulation Plugs - for REM RHU insertion (not modeled)**
- **MTES purge inlet line - Teflon plastic tubing (not modeled)**
- **HEPA filter - mounted internally, plastic tube thru WEB wall (not modeled)**

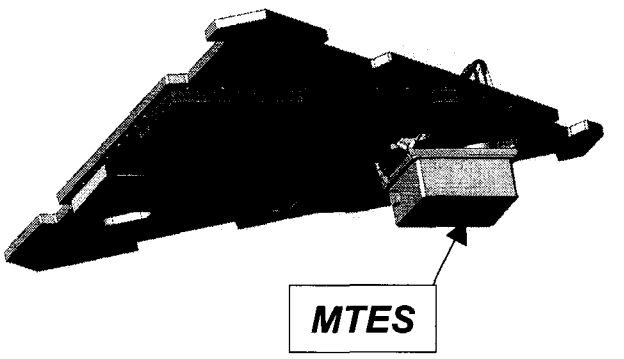


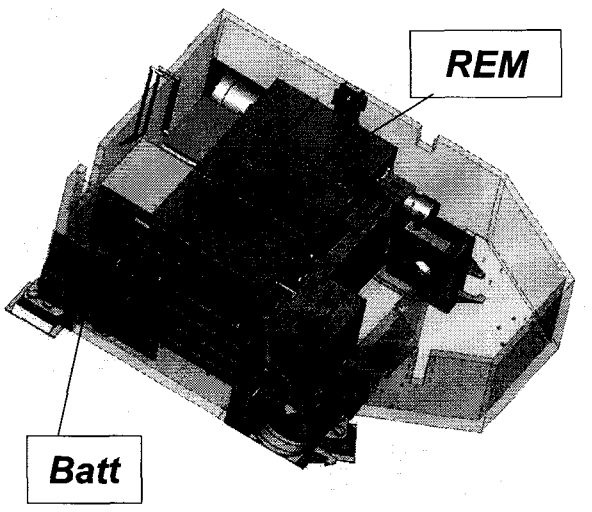

# VI. Analytical Thermal Model

## Internal ISO View of Rover

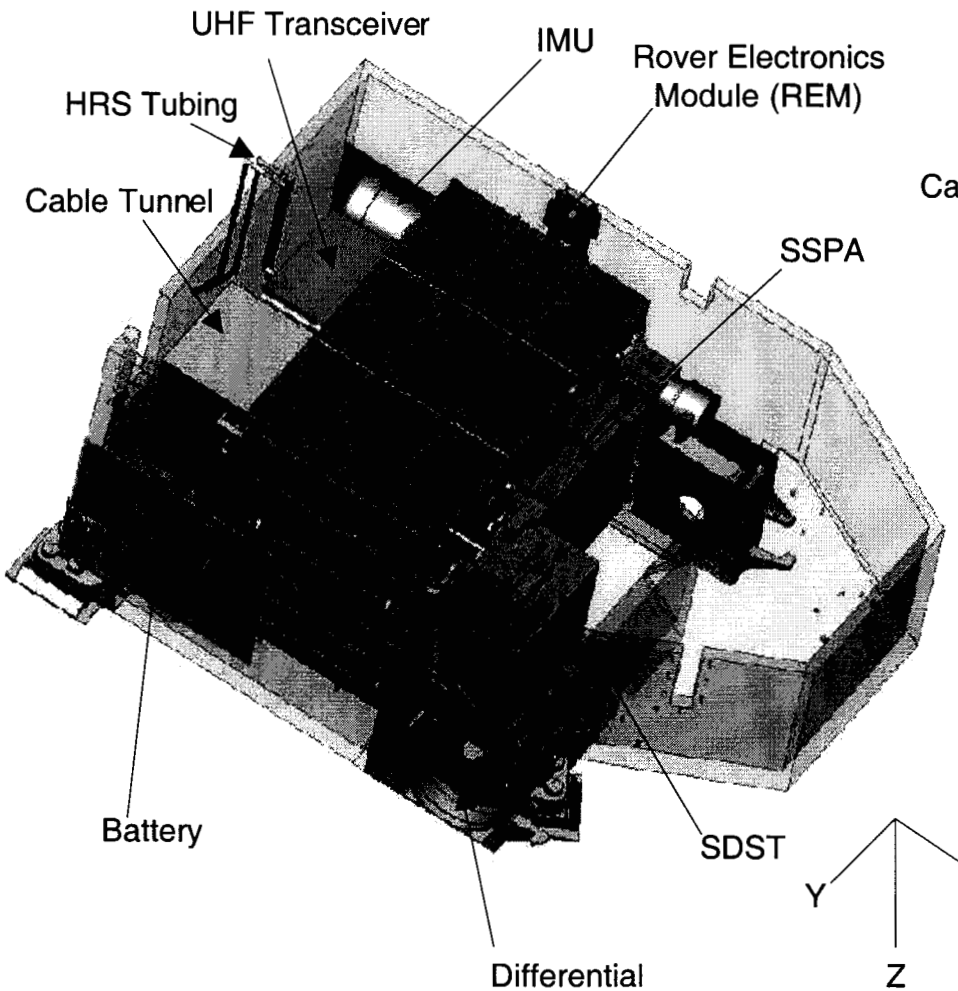


## Internal ISO View of TAS Thermal Model

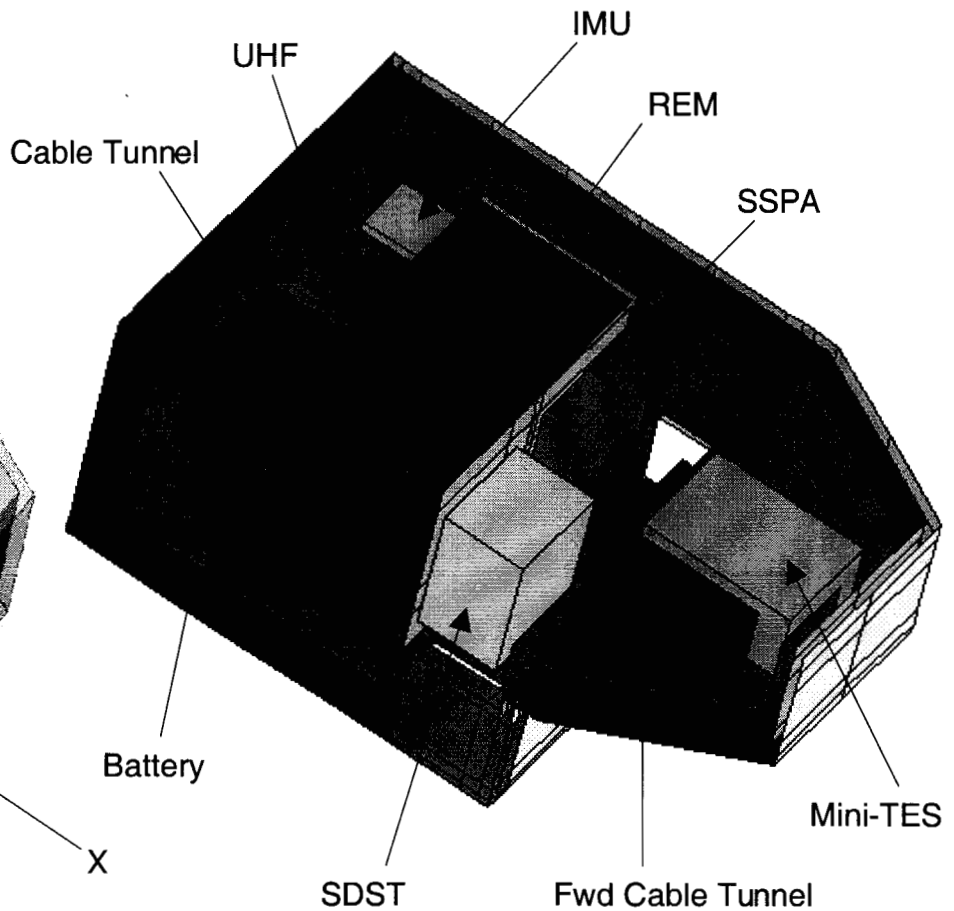


•All Internal Boxes Included in Model

# VI. Analytical Thermal Model - Steady State Heat Flow Map - Ave Cold Case, Qin=26.3W, Qout=23.6W

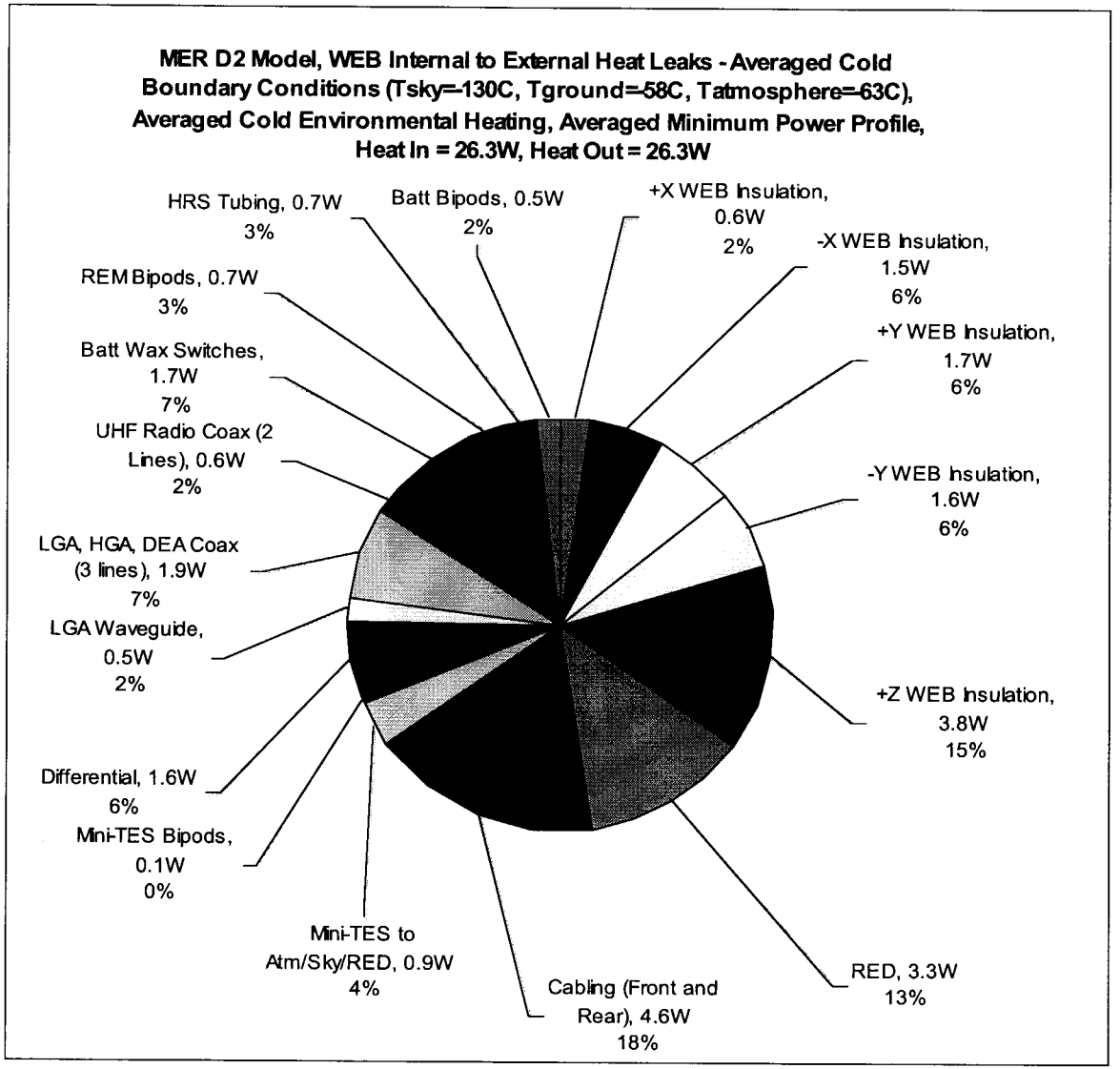


- Total WEB Loss =12.5W, 48%
- Total Flex Cable Loss = 4.6W, 18%
- Total Coax Cable Loss = 3W, 11%
- Total Strut Loss = 1.3W, 5%

# VI. Analytical Thermal Model - Hot Case Transient Temperature Predicts - Comm 3Hr Power Profile

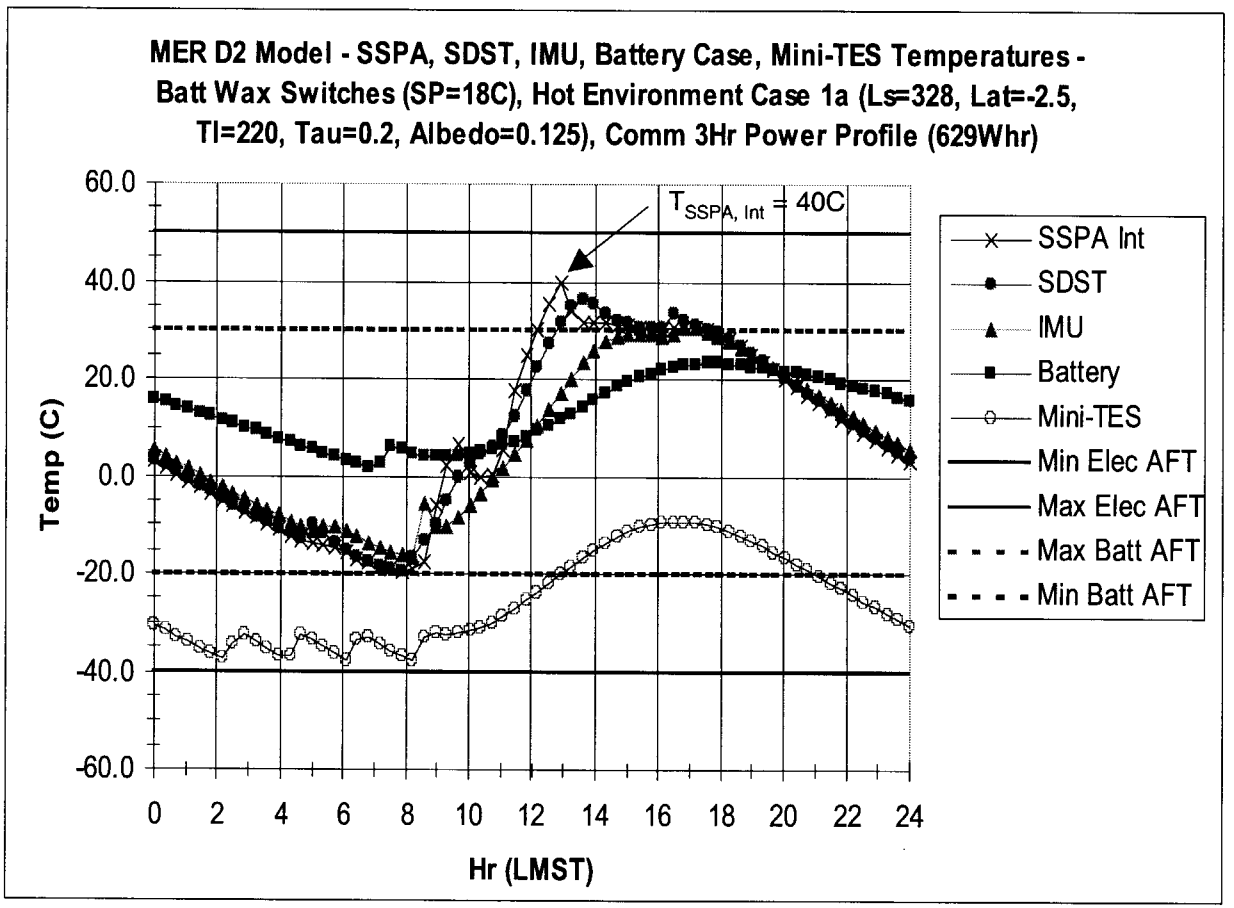


**Note: Baseline Design Includes 6 Battery RHUs, 2 REM RHUs**

# VI. Analytical Thermal Model - Cold Case Transient - Heater Energy Requirements

| | Heater Energy Consumption | | | |
|---|---|---|---|---|
| | Battery Energy (Whr) | Mini-TES Energy (Whr) | REM Energy (Whr) | Total Energy (Whr) |
| Night | 21 | 55 | 19 | 95 |
| Day | 43 | 10 | 24 | 77 |
| Total | 64 | 65 | 43 | 172 |

- **Baseline Design Includes 6 Battery RHUs, 2 REM RHUs**
- **Daytime Defined as 0800 - 1600**
- **Nighttime Defined as 1600-0800**

# What Are We Doing Now?

- MER Design Phase is Over
- Testing Will Begin In April With a Flight-Like MER Rover Mockup
- Thermal Model Correlation Activities
- STV Testing Will Follow with Flight HW in September