NGSS: The Next Generation Sky Survey

Peter R.Eisenhardt[a], Edward L. Wright[b]
[a]Jet Propulsion Laboratory, California Institute of Technology; [b]Department of Astronomy, UCLA

ABSTRACT

The Next Generation Sky Survey (NGSS) is a Medium Explorer currently in Phase A study, with launch planned for 2007. NGSS will map the entire sky with unprecedented sensitivity from 3.5 to 23 microns. With over 500,000 times the sensitivity of COBE at 3.5 and 4.7 microns, and a thousand times that of IRAS at 12 and 25 microns, NGSS will establish an essential database for testing theories of the origins of planets, stars, and galaxies, and is the necessary precursor for NGST. The science objectives of NGSS include finding the most luminous galaxies in the universe, and the closest stars to the sun. NGSS will achieve these dramatic advances while minimizing mission cost and risk by using flight-proven technology for its spacecraft bus components and cryogenic instrument, as well as 2MASS data processing software.

1. SCIENCE OBJECTIVES

We live in an era when the basic reconnaissance of the universe is still underway. Sensitive all-sky surveys across the electromagnetic spectrum are imminent or have recently been completed, but a major gap remains in the mid-infrared (Fig. 1).

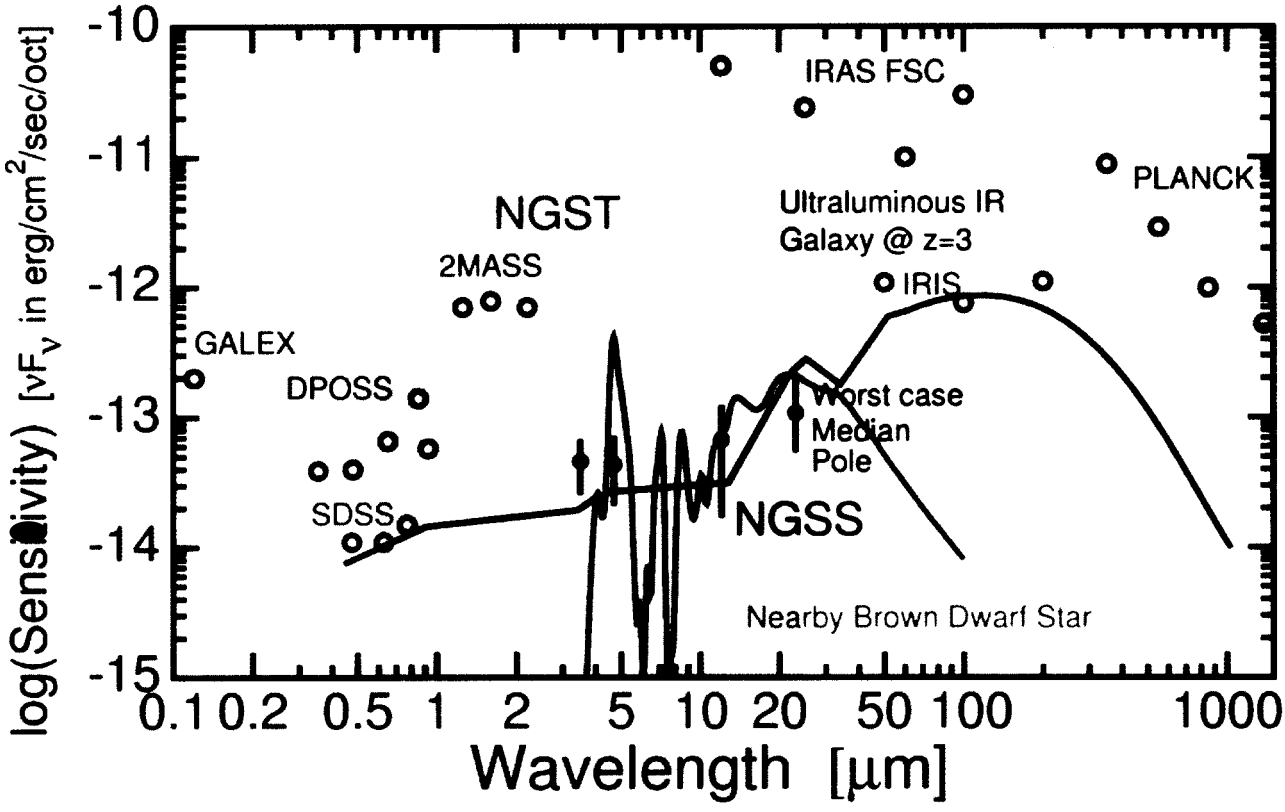

Fig. 1. NGSS will have a sensitivity (filled circles with vertical bars) much better than previous IR all-sky surveys, and comparable to the best all-sky survey sensitivities. The COBE/DIRBE all-sky survey at 3.5 and 5 m is at —7.5, off the top of the plot. The shaded band shows the wavelength coverage planned for NGST, which is primarily in the sensitivity gap filled by NGSS.

To our knowledge, every all-sky survey with such a leap in sensitivity has revealed dramatic surprises, which have significantly changed our knowledge of our universe and have created entire new areas of astronomical investigation.

NGSS will use a 50-cm telescope to survey the sky at 3.5, 4.7, 12 and 23 μm with ~5″ resolution (10″ at 23 μm). The catalogs and images from NGSS will have the same value to future large IR space telescopes such as the Next Generation Space Telescope (NGST) that the Palomar Observatory Sky Survey (POSS) had for large ground-based optical telescopes. In addition, NGSS wavelength coverage will enrich the analysis of sky surveys at other wavelengths. NGSS design is expected to achieve the 5σ point source sensitivities listed in Table 1 and plotted in Fig. 1. The median sensitivities in Table 1 are predicted to be met or surpassed over 50% of the sky. At 3.5- m and 4.7- m these sensitivities correspond to 17.4 and 16.5 mag (Johnson L and M), both on the Vega system.

Table 1. Predicted and Required NGSS Point Source Sensitivities [5σ (μ Jy)]

λ (m)	Requirement	Minimum, 5 passes on ecliptic	Median, 11 passes at |β|=30°	Estimated Confusion Limit
3.2—3.8	120	55	35	30
4.2—5.2	160	72	44	33
9—15	650	367	190	68
20—26	2600	1220	601	415

With the expected sensitivities, NGSS easily achieves its primary scientific objectives:

- The nature and evolutionary history of ultra-luminous infrared galaxies (ULIRGs), and the identification of the single most luminous galaxy in the universe .
- The space density, mass function, and formation history of brown dwarf stars in the solar neighborhood. NGSS will be exceptionally sensitive to old, cold brown dwarf stars with T ~125–1000 K (Jupiter-Gliese 229B), among which is likely to be the nearest star to the sun.

Additional scientific objectives include: radiometric diameters and albedos for almost all known asteroids; the density of old, red stars at redshift z = 1, near the peak of the UV-optical derived star formation rate; and the luminosity function for very faint protostars and the evolution of circumstellar disks. Table 2 lists the NGSS science team members, roles, and experience.

Meeting these science goals requires a sensitivity level which NGSS is expected to easily surpass. A 200 K brown dwarf with the size of Jupiter at the distance of Proxima Centauri will be a 7σ detection at 4.7 m and known to be >5 σ redder than a 1000 K blackbody at 3.5 m for the sensitivity requirements shown in Table 1. The most luminous known galaxy in the Universe is the z=0.93 source FSC15307+3252. This source at z=3 defines the 23 μm sensitivity requirement. A flux ratio of 4:1 between the 23 and 12 μm channels efficiently selects ULIRGs, and this flux ratio defines the 12 μm sensitivity requirement in Table 1.

2. MISSION OVERVIEW

The NGSS will be launched on a Taurus 2210 into a Sun-synchronous low Earth orbit over the terminator, similar to IRAS and COBE. The 7-month baseline mission includes a 1-month checkout period. The zenith-pointing spacecraft will scan a circle perpendicular to the Earth-Sun line at a constant rate of 1°/16 s (one revolution per orbit), while a scan mirror located at an image of the pupil will move in the opposite direction to freeze the sky on the arrays during an exposure, and then quickly move forward by 33′ for the next exposure (Fig. 2). Spacing between exposures of 33′ gives a small overlap between frames and 8.8 s between exposures. The orbit precesses in ecliptic longitude by 1°/day or 4′/orbit, and, after allowing for data losses due to the Moon and the South Atlantic Anomaly, the minimum sky coverage is 5 frames and the median coverage is 11 frames.

See next page

To our knowledge, every all-sky survey with such a leap in sensitivity has revealed dramatic surprises, which have significantly changed our knowledge of our universe and have created entire new areas of astronomical investigation.

NGSS will use a 50-cm telescope to survey the sky at 3.5, 4.7, 12 and 23 μm with ~5″ resolution (10″ at 23 μm). The catalogs and images from NGSS will have the same value to future large IR space telescopes such as the Next Generation Space Telescope (NGST) that the Palomar Observatory Sky Survey (POSS) had for large ground-based optical telescopes. In addition, NGSS wavelength coverage will enrich the analysis of sky surveys at other wavelengths. NGSS design is expected to achieve the 5σ point source sensitivities listed in Table 1 and plotted in Fig. 1. The median sensitivities in Table 1 are predicted to be met or surpassed over 50% of the sky. At 3.5-μm and 4.7-μm these sensitivities correspond to 17.4 and 16.5 mag (Johnson L and M), both on the Vega system.

Table 1. Predicted and Required NGSS Point Source Sensitivities [5σ (μ Jy)]

λ (μm)	Requirement	Minimum, 5 passes on ecliptic	Median, 11 passes at |β|=30°	Estimated Confusion Limit
3.2–3.8	120	55	35	30
4.2–5.2	160	72	44	33
9–15	650	367	190	68
20–26	2600	1220	601	415

With the expected sensitivities, NGSS easily achieves its primary scientific objectives:

- The nature and evolutionary history of ultra-luminous infrared galaxies (ULIRGs), and the identification of the single most luminous galaxy in the universe .
- The space density, mass function, and formation history of brown dwarf stars in the solar neighborhood. NGSS will be exceptionally sensitive to old, cold brown dwarf stars with T ~125–1000 K (Jupiter-Gliese 229B), among which is likely to be the nearest star to the sun.

Additional scientific objectives include: radiometric diameters and albedos for almost all known asteroids; the density of old, red stars at redshift z = 1, near the peak of the UV-optical derived star formation rate; and the luminosity function for very faint protostars and the evolution of circumstellar disks. Table 2 lists the NGSS science team members, roles, and experience.

Meeting these science goals requires a sensitivity level which NGSS is expected to easily surpass. A 200 K brown dwarf with the size of Jupiter at the distance of Proxima Centauri will be a 7σ detection at 4.7 μm and known to be >5σ redder than a 1000 K blackbody at 3.5 μm for the sensitivity requirements shown in Table 1. The most luminous known galaxy in the Universe is the z=0.93 source FSC15307+3252. This source at z=3 defines the 23 μm sensitivity requirement. A flux ratio of 4:1 between the 23 and 12 μm channels efficiently selects ULIRGs, and this flux ratio defines the 12 μm sensitivity requirement in Table 1.

2. MISSION OVERVIEW

The NGSS will be launched on a Taurus 2210 into a Sun-synchronous low Earth orbit over the terminator, similar to IRAS and COBE. The 7-month baseline mission includes a 1-month checkout period. The zenith-pointing spacecraft will scan a circle perpendicular to the Earth-Sun line at a constant rate of 1°/16 s (one revolution per orbit), while a scan mirror located at an image of the pupil will move in the opposite direction to "freeze" the sky on the arrays during an exposure, and then quickly move forward by 33′ for the next exposure (Fig. 2). Spacing between exposures of 33′ gives a small overlap between frames and 8.8 s between exposures. The orbit precesses in ecliptic longitude by 1°/day or 4′/orbit, and, after allowing for data losses due to the Moon and the South Atlantic Anomaly, the minimum sky coverage is 5 frames and the median coverage is 11 frames.

Table 2. NGSS Science Team

Name	Institution	Experience	Role
Ned Wright	UCLA	COBE, MAP, SIRTF	PI
Andrew Blain	Caltech	SCUBA	ULIRGs
Martin Cohen	Vanguard	IRAS, ISO, MSX, WIRE	Galactic Structure, Calibration
Roc Cutri	IPAC/Caltech	IRAS, 2MASS	AGN, Science Data Processing (SDP) Lead
Peter Eisenhardt	JPL/Caltech	SIRTF	Project Scientist, Distant Galaxies
Nick Gautier	JPL/Caltech	IRAS, SIRTF	Facility Scientist, Interstellar Dust
Isabel Hawkins	UC Berkeley	EUVE	Outreach
Tom Jarrett	IPAC/Caltech	2MASS	Nearby Galaxies, SDP Pipeline, Image Atlas
Davy Kirkpatrick	IPAC/Caltech	2MASS	Brown Dwarfs, SDP QA, Data Product Validation
Carol Lonsdale	IPAC/Caltech	WIRE, 2MASS, SIRTF	ULIRGs
John Mather	NASA/GSFC	COBE/ FIRAS PI	NGST coordination
Ian McLean	UCLA	UKIRT, Keck	IR Detector Characterization
Robert McMillan	U. Arizona	Spacewatch	Asteroids
Deborah Padgett	IPAC/Caltech	WIRE, NICMOS	Debris Disks, Low Mass Stars
Michael Ressler	JPL/Caltech	IRTF, MIRLIN	Si:As Detectors, Low Mass Stars
Michael Skrutskie	U. Virginia	2MASS PI	Brown Dwarfs, Low Mass Stars
Adam Stanford	UC Davis	Keck	Clusters
Charles Steidel	Caltech	Keck	Distant Galaxies
Russ Walker	Vanguard	IRAS, MSX, WIRE	Asteroids, Zodiacal Cloud, Calibration

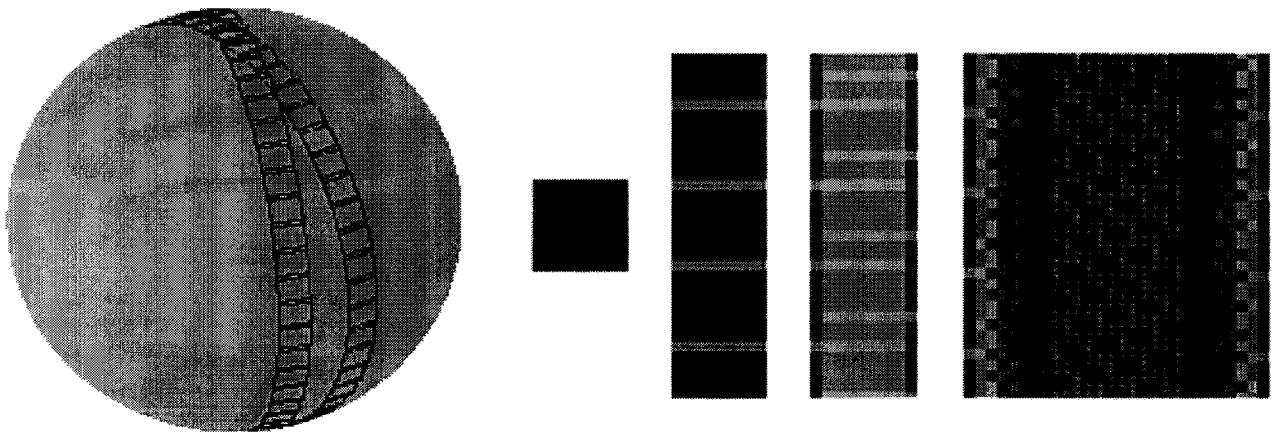

Fig. 2. NGSS Survey Strategy. Left, a schematic of two orbits, 20 days apart. The 37 arcmin FOV has been greatly enlarged for clarity. Right, a detail showing the coverage pattern at the ecliptic for 1 frame, 1 orbit, 2 orbits, and 20 orbits. Colors show the number of overlaps from 1 (red) to 11 (light blue).

3. INSTRUMENT

The 50-cm telescope, reimaging optics, and detectors (Fig. 3) will be cooled by a two-stage solid-hydrogen cryostat based on the Wide Field Infrared Explorer (WIRE), sized for a cryogen lifetime of 13 months (Fig. 4). The scan mechanism is based on a flight-proven Spirit III/Mid-course Space Experiment (MSX) design. The planned focal planes, with 1024^2 pixel arrays and 2.2″ pixels, will cover a 37′ FOV. HgCdTe arrays will be used at 3.5 and 4.7 μm, while Si:As will be used to cover the 12 and 23 μm bands. The recent development of these high performance, large format arrays is the technological advance which makes NGSS possible.

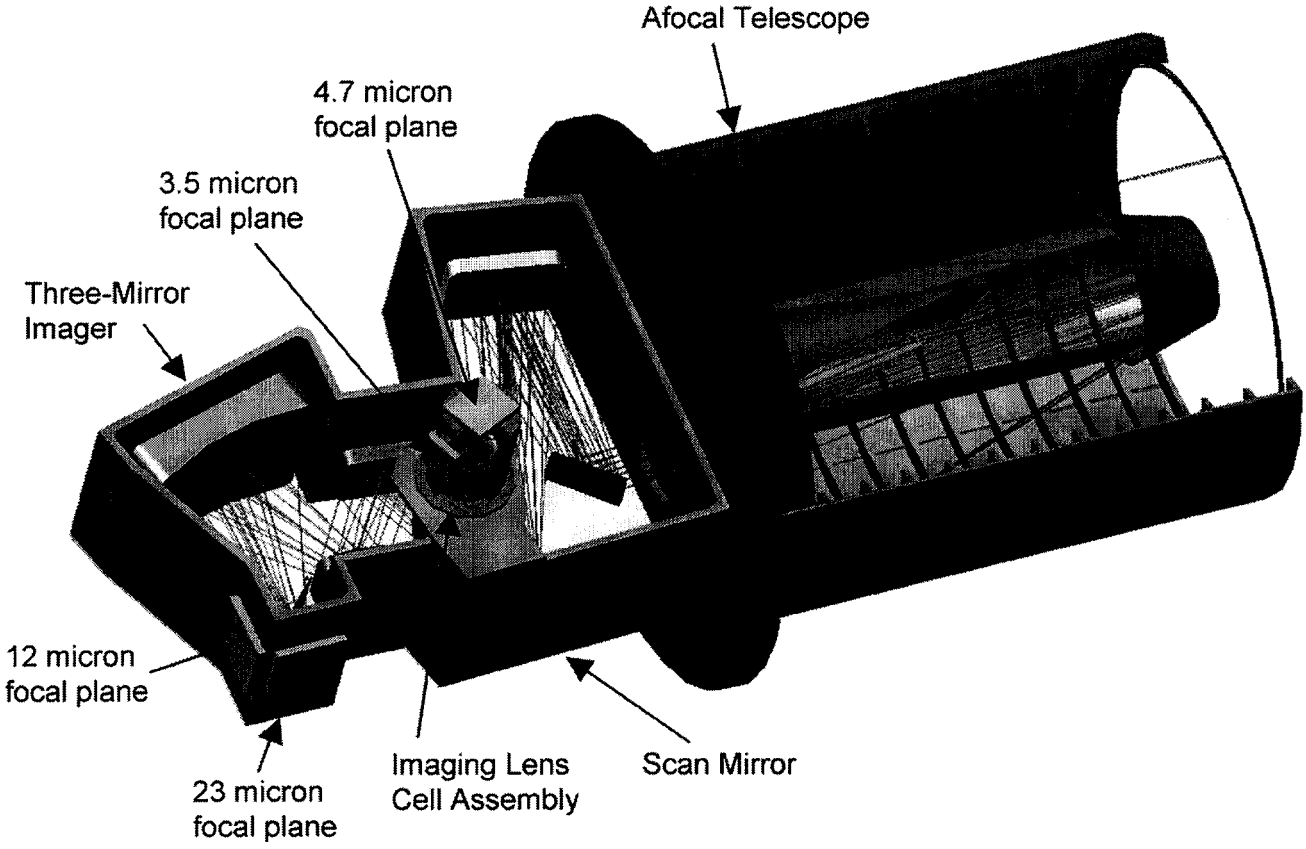

Fig. 3. NGSS Optical Design

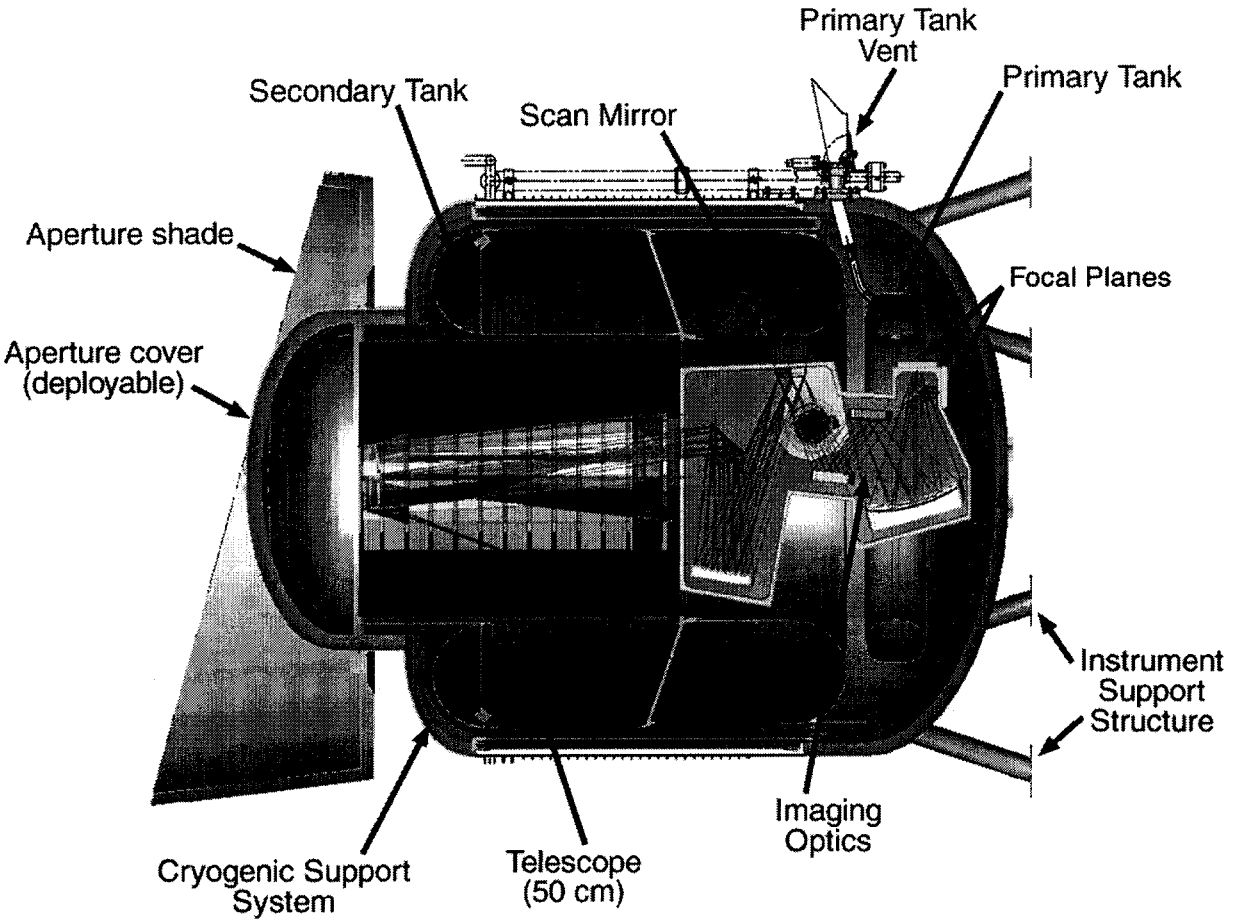

Fig. 4. The NGSS Instrument.

4. SPACECRAFT

The NGSS spacecraft is 3-axis stabilized, and has deployed, stationary solar arrays, and a 2-axis gimbaled high gain antenna (Fig. 5). The spacecraft is based on the Ball Aerospace and Technology Corporation RS300 design, modified to tailor it for the NGSS mission and to increase the capacity of the structure to meet Taurus class mass requirements. The instrument is mounted to the top deck using low-conductivity bi-pods, with the instrument electronics mounted inside the primary spacecraft structure. The spacecraft architecture is single string, with selected redundancy on critical components such as the star tracker. Fig. 6 shows the launch configuration of the NGSS spacecraft in its fairing.

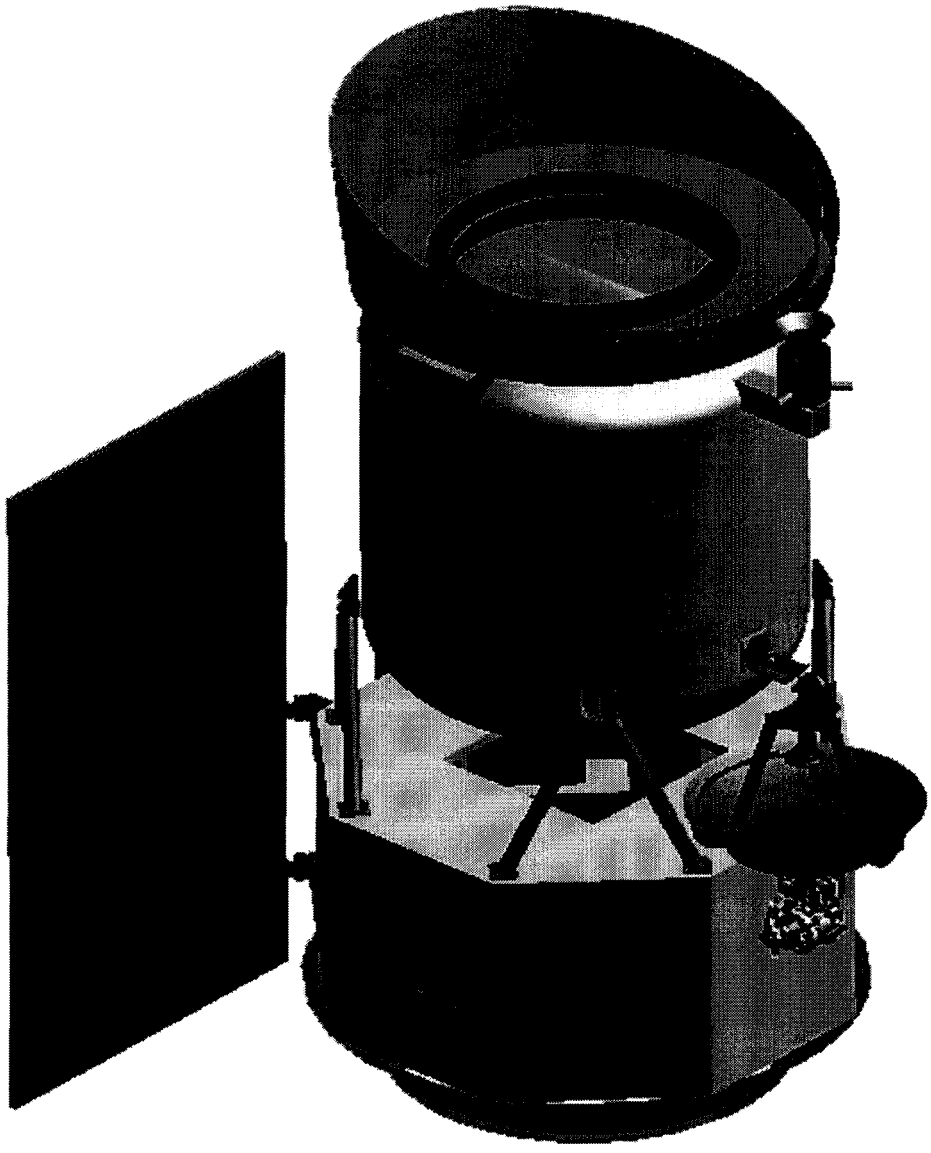

Fig. 5. The NGSS spacecraft in its deployed configuration.

5. DATA SYSTEM

The science data rate from NGSS is 0.5 million pixels per second, or approximately 600 Gbits per day, while the onboard data storage capacity is 640 Gbits. The data will be downlinked via the Tracking and Data Relay Satellite System at 300 Mbps, but overheads due to encoding reduce the effective data rate to 128 Mbps. Downlinks will be performed while passing over the poles of the NGSS orbit (which occurs 32 times per day), because of the high redundancy of sky coverage there (see Fig. 2). Lossless compression may be used to reduce the onboard data volume. With no on-board compression, six downlinks per day will be required. Data processing for the survey will carried out by the Infrared Processing and Analysis Center (IPAC) using a process similar to that for the Two Micron All Sky Survey (2MASS). IPAC will generate a source catalog and image atlas. A preliminary set of data products will be released 6 months after the end of the nission, and a final set will be released a year and a half after the end of the mission.

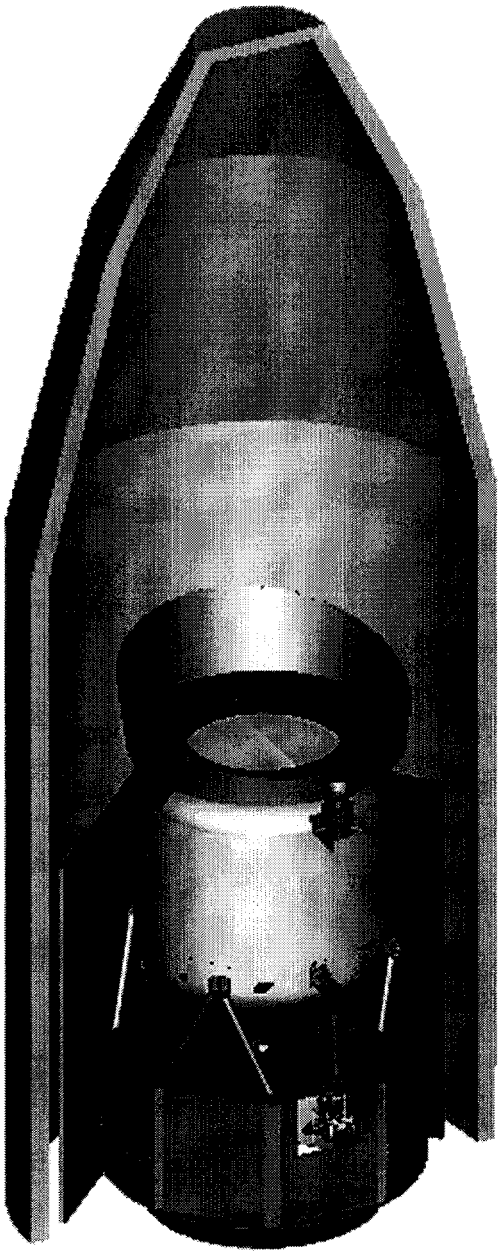

Fig. 6. The NGSS spacecraft in its launch configuration.

6. INTEGRATION AND TEST

Fig. 4 illustrates the telescope and optics (shown in Fig. 3) integrated into the cryostat. Because the telescope and optics system is its own module, it simply lowers into the cryostat through the open aperture and is bolted into place. An access hole on the cryostat aft-dome allows focal plane cables to be routed out the aft end and sealed off at the vacuum shell. Next, the cover is installed along with the aperture shade and support structure for the spacecraft. This assembly is then fully functional and environmentally tested at the science instrument level. Following these tests, the science instrument is shipped to Ball for spacecraft integration. Integration with the spacecraft is also straightforward, and will be carried out using existing Ball procedures.

The NGSS team has set a number of goals for the testing of the instrument systems and the integrated science instrument. These include verifying the instrument meets its functional and design objectives, detecting any fabrication defects or marginal components early in the test sequence, and verifying the instrument will survive and perform in predicted environments. To meet these goals, components will be tested to show that they meet their respective functional requirements prior to being integrated into the instrument. These goals are the same for the spacecraft and integrated system test program.

7. MANAGEMENT

The NGSS Principal Investigator (Edward L. Wright of UCLA) will provide overall scientific leadership and is responsible to NASA for the quality of the scientific product. JPL will be responsible for project management, sysyem engineering, and mission assurance. Data processing for NGSS will be carried out at the Infrared Processing and Analysis Center (IPAC). The Space Dynamics Laboratory (SDL) at Utah Sate University has responsibility for the NGSS instrument. SDL has selected DRS Sensors and Targeting Systems and the Rockwell Science Center to provide the focal plane arrays, Lockheed-Martin's Advanced Technology Center to provide the cryostat, and SSG to provide the telescope and optics system. Ball Aerospace will provide the spacecraft, system integration and test, and mission operations.

ACKNOWLEDGEMENTS

The design summarized above is the product of an ongoing effort by the entire NGSS team, supported by a Phase A study contract awarded by the National Aeronautics and Space Administration (NASA) through the Explorer Program Office. The Explorer Program is administered by the Goddard Space Flight Center. We particularly wish to acknowledge here the contributions of NGSS team members David Purmort, Scott Schick, and John Kemp. Portions of this work were carried out at the Jet Propulsion Laboratory, California Institute of Technology, under a contract with NASA.